MTA Maryland

MARYLAND TRANSIT ADMINISTRATION

MARYLAND DEPARTMENT OF TRANSPORTATION

Martin O'Malley, Governor • Anthony G. Brown, Lt. Governor
Beverley K. Swaim-Staley, Secretary • Ralign T. Wells, Administrator

TO: All Planholders

FROM: Maryland Transit Administration

SUBJECT: **ADDENDUM NO. 6**
Contract No.: T-0208-0140
MARC Wedge Storage Yard at Union Station

DATE: October 5, 2011

Enclosed and effective this date is Addendum No. 6 to the subject Contract. This addendum does not delay the Bid Opening date of **Friday, October 14, 2011 at 2:00 p.m., 6 St. Paul Street, Baltimore, MD 21202, Conference Room #742.**

A conformed copy of revised specification sections is attached. A list of the changes made to this contract is attached to this Addendum. Also attached are responses to contractors' questions.

The Bidder shall acknowledge receipt of this Addendum by completing and returning this form with the bid package.

All other terms and conditions remain unchanged.

Sincerely,

Vanessa Ashe

Vanessa Ashe, Procurement Officer
Professional Services/Construction/Installation Section
Procurement Division

Acknowledgement of receipt of ADDENDUM #6 to Solicitation #T-0208-0140

Vendor Name: _____

_____ _____

Authorized Representative's Signature Date

ADDENDUM NO.: 6
DATE: 10/5/11
CONTRACT NO.: T-0208-0140

The following additions, deletions, and modifications are hereby made a part of the Contract Documents of MARC Wedge Storage Yard At Union Station, Contract No.: T-0208-0140.

Item No.	Page	Modification
I. CONTRACT SPECIFICATIONS		
1	Table of Contents/TOC 5	Added page 927B
2	Bid Form Page BF-4	Revised description of Item No. 1
3	Bid Form Page BF-24	Revised Item 207 unit to EA.
4	Bid Form Page BF-25	Added new items 215, 216, 217 & 218
5	Bid Form Page BF-25A	Renumbered previous item 215 to 219
6	Liability Insurance Requirements	Replace in its entirety. Revisions appear in red.
7	Section 16116/SP-927B	Added Section 4.13
8	Section 16120/SP-932	Added Section 4.07

MARC WEDGE STORAGE YARD AT UNION STATION
CONTRACT NO. T-0208-0140
September 30, 2011

#	SPEC SECTION	QUESTIONS	RESPONSES
1		As per Addendum No.4, items for "Removal of Unsuitable Material" and "Select Backfill" were never added to the Bid Form. Please clarify.	"Removal of Unsuitable Material" and "Select Backfill" have been added as new bid Items 215 & 216.
2		In Addendum #4, in the Question and Answer section, the answer to Question #96 states that "New Items 'Removal of Unsuitable Material (Contingent)' and 'Select Backfill (Contingent)' has been added to the project." Upon reviewing the revised Unit Price Schedule in the Bid Form, it appears that these items have not been added. Will these items be added to the Unit Price Schedule?	"Removal of Unsuitable Material" and "Select Backfill" have been added as new bid Items 215 & 216.
3		In order to obtain insurance pricing, can you please provide the number of trains per day for freight and passenger cars?	Varies anywhere between 100 to 500 moved trains per day at the crossings .
4		This says 'New Items "Removal of Unsuitable Material (contingent)" and "Select Backfill (Contingent)" has been added to the project.' To where has it been added, we don't find it, them?	"Removal of Unsuitable Material" and "Select Backfill" have been added as new bid Items 215 & 216.
5		This says"...New Item 142A..." Our BID FORM of Addendum #4 has no Bid Item 142A. Please advise.	This was a typo, the new item number is 213
6		This answer directs us to "See response to question 105." However 105 has nothing to do with the question that was asked. Please advise where to find the response.	The PEPCO primary service duct was revised to 4-5" Fiberglass
7		Amendment # 4 revisions to dwgs. TP-2, 3 and 4 add 3" sch. 80 PVC direct buried conduit for the switch heater system. Previously, there was only 2" conduit required for this system and it was covered by bid item # 150 (Conduit PVC 80 2" Dia.). But, there is no item on the bid form for the added 3" conduit. Where should this cost be included in our bid?	A new item 217 was added for the Conduit PVC 80 3" Dia
8		Amendment # 4 revisions to dwgs. TP-2, 3 and 4 add #4/0 cable for Amtrak switch heater at switch # SW-52-1 and derail. There is a bid item for #4/0 cable (item # 156) but the qty. was not increased to reflect the added wire. How should we address this quantity discrepancy?	A new item 217 was added for the 4/0, 600 V cable
9		Amendment # 4 revisions to dwgs. TP-2, 3 and 4 add a new handhole (HH-5). There is a bid item for 36x36 handholes (item # 121) but the qty. was not increased to reflect the added handhole. How should we address this quantity discrepancy?	There was also a handhole removed, the total quantity is correct as shown.

#	SPEC SECTION	QUESTIONS	RESPONSES
10		This Spec Section **02488 SOLDIER PILE WALL SP 139 – 146** is listed in this ADDENDUM NO. 4 TABLE OF CONTENTS; however, it does not appear in the addendum pages .pdf. Is there a reason for that?	This Table of Contents page was issued because of the addition of pages in section 02530, Section 02488 was not revised
11		We brought this up some time ago. It still looks strange to have 2 LS. Should it be 2 **EA**? Or should it be **1** LS?	Item 207 Unit was revised to EA.
12		There is a page **SP- 165A** in the .pdf of ADDENDUM NO. 4, is there a reason that it is not mentioned here?	Page 165A was created due to the additions to page 162. There was no new data added to page 165A
13		"Does MTA consider GE Transportation's switch machine model 3000 to be an approved equal to the Global Rail Systems Model TS-4500 called out for in specifications section 17125, 1.01B? We ask that our products be given a fair assessment to specification needs and are looked at as an approved alternate and we are included in the opportunities to bid to MTA, and to commercial installers that may be bidding work to MTA?"	The GE Transportation Model 3000 switch machine is not a direct replacement for a Global Rail Systems Model TS-4500 switch machine. Differences occur notably in terms of dimensions of the machine and in the throw of the machine. This would require some differences in design, detail and mounting. With any and all design and installation modifications required, the GE Model 3000 is an approved equal to the Global Rail Systems Model TS-4500. It is incumbent upon the Contractor to ensure that all required modifications have been met.
14		I was asked to clarify my question further since the sections I referred to were not listed as I stated them. Attachment #1 shows my designation should have read "Section 13601-1.07(B)" please see Attachment #2. I understood "AISC category MB" to mean "Major Bridge" since AISC no longer has a category for "Manufactured Buildings". Secondly, I should have referred to Section 05120-1.01 (B-4), please see Attachment #3 and Section 05120-1.02 (D), please see attachment #4, where Section 05120-1.01 (B-4) refers to Section 13601 - Metal Inspection Platforms as "related work" and further in Section 05120-1.02 (D) requires and AISC Certification in Standard Building Structures; my question asks which specification governs the fabrication of the Metal Inspection Platforms? The AISC certification program in "Simple Bridges" and "Standard Building Structures" has very stringent QA/QC requirements so the second part of my questions would be, If we hold AISC certifications as listed above would the requirement to be a "Member" of MBMA be set aside?	AISC Certification program category MB which was described at Section 13601-1.07 (B) has been discontinued as of December 31, 2009. The manufacturers shall be AISC certified for AISC Standard Building Structures. It is not required for Manufacturers to be a member of MBMA.
15	Bid Form - page BF 25 - Item #209 and Appendix I - page 5	Is the Insurance Cost Worksheet available in either Word or Excel format? In section C, there is room for only two workman's compensation codes. This contract will have a minimum of six to eight codes utilized.	No as it is a proprietary document. If contractors have more than 2 class codes they should attach a separate document and summarize inside the form.

#	SPEC SECTION	QUESTIONS	RESPONSES
16		What costs are to be included in this form? Prime only or Prime plus subcontractors?	Prime contractors should do their best to identify and remove insurance costs from their own work as well as that of all known or anticipated subcontractors to ensure they are pricing competitively.
17		If the costs are to be Prime only, then this form can be filled out and included with our Bid Proposal. As stated below the Signature Block, are we to submit the Worksheets for all subs utilized in our Proposal in this alternate.	See answer to Question #16
18		If the costs for this form are to be Prime plus Subcontractors, then it would next to impossible to compile all the data from various subcontractors into one spreadsheet and submit with the Bid Proposal. As you are aware, the Prime Contractors receive pricing from various subcontractors up to just a few minutes before the submission of bids. We respectfully request that submission of this form be delayed to be submitted 48 hours after receipt of bids. Additionally, because of the effort required to fill out this form, we request that only the low and second bidders be required to submit it. Furthermore, we request that item 209 be deleted from the Bid Submission form. submission of the Insurance Cost Worksheet within 48 hours will replace that item.	See answer to Question #16
19		At the bottom of the first page of the Worksheet, there are requirements for extensive additional information. These include "Schedule of Values, General Liability declaration and rate pages, Workers Compensation declaration and rate pages, Umbrella/Excess Liability declaration and rate pages, Experience Modification worksheet, and 5 years actual loss experience for each line of coverage in which the Contractor retains more than $5,000". Is it truly the intent of MTA to receive all of this data from each Prime and his Subcontractors with the Bid Submission? there may be anywhere from 10 to 20 subcontractors involved in this Contract. When you figure there will probably be at least 6 to 10 Prime Contractors, then MTA will be receiving upwards of 200 multi-page documents for the Insurance Cost Worksheet Alone. Again, we respectfully request that the due date for this requirement is delayed to 48 hours after the receipt of bids and be limited to the low two bidders.	No back up documentation is required at bid time. These are simply all the areas and or methods by which various contractors may need to examine in order to accurately identify and remove insurance cost(s).
20	Liability Insurance Requirements, page 3 of 28	Builder's Risk Insurance, states the limits are to be determined, but 1.3.1 states the limit will be no less than 100% of the replacement value of the Project. Please provide the builders risk limit of insurance.	The loss limit (total liability per occurrence) is $50,000,000. See revised document.
21	Liability Insurance Requirements 1.2.6	Requires the Contractor's Umbrella Liability insurance be in coverage form less restrictive than the underlying policies. Umbrella policies rely on the terms and conditions of the underlying policy and are therefore not less restrictive. Please replace the word "less" with the words "no more".	The word "less" has been replaced with the words "no more". See revised document.

#	SPEC SECTION	QUESTIONS	RESPONSES
22	Liability Insurance Requirements 1.2.7	Includes professional liability insurance in the list of coverages that must include Additional Insureds. Additional insured status is not commercially available on professional liability policies. On line 2, please delete the reference to professional liability insurance listed as "1.2.5".	Reference to professional liability insurance has been deleted. See revised document.
23	Liability Insurance Requirements 1.3.1	states the builders' risk insurance will include coverage for off-site storage and in-transit but the sublimits for these coverages are not identified. Please provide the in off-site storage and in-transit sublimits which will be provided?	Offsite temporary storage per ocurrence limit is $1,000,000. Inland transit limit is $500,000.
24	Liability Insurance Requirements 1.3.1	states the builders' risk insurance will include coverage for expenses due to delays in completion but does not identify the types and amounts of expenses covered. Please list the types and amounts of expenses which would be covered as delay in completion costs.	This coverage is not provided on a blanket basis inside the OCIP builder's risk program. It can be added on a project by project basis, if the need is determined by the MTA.
25	Liability Insurance Requirements 1.3.1	states the builders' risk insurance will include sublimits for losses due to earthquake (including sinkhole) and flood. Please provide the sublimits of insurance which will apply to earthquake, sinkhole and flood.	Earthquake and flood (depending on flood zone) limits are each $50,000,000.
26	Liability Insurance Requirements, page 3 of 28	Commercial General Liability states the OCIP will provide 5 years of Completed Operations Coverage but 1.3.2 (b) states the Commercial General Liability will have 3 years of Completed Operations Coverage. Please clarify the number of years of Completed Operations which will be provided by the OCIP.	The OCIP will provide 10 years completed operations. See revised document.
27	Liability Insurance Requirements, page 3 of 28	Excess Liability states the OCIP will provide $50 million in Excess Liability limits but 1.3.2 (c) states the Excess Liability limits will be $25 million. Please clarify the amount of Excess Liability limits which will be provided by the OCIP.	Excess liability inside the OCIP will be $50,000,000. See revised document.
28	Liability Insurance Requirements 1.3.3	states if the MTA terminates or modifies the OCIP, the Contractor shall provide the coverage no longer furnished and the MTA will reimburse the actual cost of such alternative insurance, which was originally identified in the bid documents. Insurance premium rates normally increase over time. Will the MTA allow for incremental increases in premium rates as stated in other parts of the specifications such as SGP – 4.03?	Yes, per SGP-4.03, Negotiated Payment Provisions.
29	Insurance Requirements	Although the Owner Controlled Insurance Program will provide Builders Risk insurance, it is unclear how comprehensive the policy will be. The Contractor has a financial risk for any losses that are not covered by the MTA's policy, and may need to purchase additional coverage. We request that either a copy of the MTA's policy be made available so that we may determine our exposure to uninsured loss, or that the Contractor's liability be limited by adding the following language to the contract: "Notwithstanding the contractor's deductible responsibilities as stated in section I, Exhibit D, Contractor's total liability for loss of or damage to the Work shall be limited to the recoveries from the Owner-provided Builder's Risk Insurance."	See revised Insurance Requirements.
30		WILL THIS PROJECT BE TAX-EXEMPT FOR PURPOSES OF SALES TAX ON MATERIAL PURCHASES THAT ARE INCLUDED WITHIN THE BID?	See GP-2.05, Taxes - Responsibility For Payment, Exemptions, Forms to File, etc.

#	SPEC SECTION	QUESTIONS	RESPONSES
31		Is this project subject to Washington DC sales tax or is the project tax-exempt?	This project is not tax-exempt.
32		Please refer to Attachment B – Surety Affidavit that is pages 4 and 5 of the Affidavit of Individual Surety section following the BID BOND forms. Is this form to be executed by all sureties or just sureties associated with the Individual Surety Form? Should there be a signature page after page 5 of the Surety Affidavit? See attached pdf file.	The form should be executed by sureties associated with the Individual Surety Form. The Surety Affidavit does not have a signature page.

MARC WEDGE STORAGE YARD AT UNION STATION
CONTRACT NO. 0208-0140
CONTRACT SPECIFICATIONS BOOK

TABLE OF CONTENTS

DESCRIPTION	PAGE NO.
NOTICE TO CONTRACTORS	NTC 1–7
VENDORS COMMENTS	VC 1
BID FORM INCLUDING UNIT PRICE SCHEDULE	BF 1–28
BID BOND	BB 1– 2
AFFIDAVIT OF INDIVIDUAL SURETY & APPENDIX	AIS 1–5
BID/PROPOSAL AFFIDAVIT	BPA 1–7
CONTRACTOR QUESTIONNAIRE	CQ 1–5
BUY AMERICA CERTIFICATE STEEL	BAC 1
CERTIFICATION REGARDING LOBBYING	CRL 1
DBE REQUIREMENTS	DBE 1–9
LIABILITY INSURANCE REQUIREMENTS	IR 1–28
SUBCONTRACTOR UTILIZATION INFORMATION FORM	SUI 1– 2
PAYMENT BY ELECTRONIC FUNDS TRANSFER	EFT 1–3
CONTRACT AGREEMENT	C 1–2
CONTRACT AFFIDAVIT	CA 1
SURETY BOND ASSISTANCE PROGRAM	SBAP 1
PAYMENT BOND	PA 1–4
PERFORMANCE BOND	PE 1– 3
BID PROTEST	BP 1
MTA PROJECT SAFETY PLAN	PSP 1–63
GENERAL PROVISIONS FOR CONSTRUCTION CONTRACTS (MARYLAND DOT)	GP 1–68
SUPPLEMENTAL GENERAL PROVISIONS FOR CONSTRUCTION CONTRACTS (MTA)	SGP 1– 48

MARC WEDGE STORAGE YARD AT UNION STATION

CONTRACT NO. T-0208-0140

CONTRACT SPECIFICATIONS BOOK

TABLE OF CONTENTS

DESCRIPTION PAGE NO.

TABLE OF CONTENTS ..... TOC 1 - 7

SPECIAL PROVISIONS

01110 SUMMARY OF WORK ..... SP 1 - 5

01130 CONSTRUCTION PROCEDURES ..... SP 6 - 15

01150 INTERFACE REQUIREMENTS ..... SP 16 - 35

01210 MISCELLANEOUS WORK ALLOWANCE ..... SP 36 - 38

01300 SUBMITTALS ..... SP 39 - 62

01310 COORDINATION AND MEETINGS ..... SP 63 - 65

01450 QUALITY ASSURANCE AND QUALITY CONTROL ..... SP 66 - 78

01500 TEMPORARY FACILITIES AND CONTROL ..... SP 79 - 85

01523 ENGINEER'S OFFICE TYPE 3 ..... SP 86 - 95

01570 ENVIRONMENTAL PROTECTION ..... SP 96 - 100

01600 PRODUCTS ..... SP 101 - 102

01780 CONTRACT CLOSE OUT ..... SP 103 - 107

01810 COMMISSIONING ..... SP 108 - 125

02315 EXCAVATION, BACKFILL AND COMPACTION ..... SP 126 - 133

02370 EROSION AND SEDIMENT CONTROL ..... SP 134 - 138

02465 DRILLED SHAFTS (CAISSONS) ..... SP 138A – 138W

02488 SOLDIER PILE WALL . . . . . SP 139 - 146

02510 WATER DISTRIBUTION SYSTEM . . . . . .SP 147 - 165

02530 SANITARY SEWER COLLECTION SYSTEM . . . . . .SP 166 – 177F

02535 HORIZONTAL DIRECTIONAL DRILLING. . . . . .SP 178 – 188

02620 SUBDRAINAGE . . . . . .SP 189 - 195

02630 STORM DRAINAGE . . . . . .SP 196 - 210

02635 OILY STORMWATER COLLECTION SYSTEM. . . . . SP 211 - 226

02636 STORMWATER MANAGEMENT STORM FILTER . . . . . SP 227 - 235

02720 AGGREGATE BASE COURSE . . . . . SP 236 - 239

02725 SUB-BALLAST . . . . . .SP 240 - 243

02726 BALLAST . . . . . .SP 244 - 249

02728 BALLAST PROCUREMENT. . . . . .SP 250 - 255

02745 HOT MIX ASPHALT PAVEMENT . . . . . SP 256 - 61

02750 CONCRETE PAVEMENT . . . . . .SP 262 - 270

02763 PAINTED TRAFFIC LINES AND MARKINGS. . . . . SP 271- 276

02770 CONCRETE CURBS . . . . . SP 277 - 281

02805 RUBBERIZED MODULAR CROSSING SYSTEM . . . . . SP 282 - 286

02806 PRECAST CONCRETE CROSSING SYSTEM. . . . . SP 287 - 290

02807 RUBBERIZED MODULAR CROSSING SYSTEM
PROCUREMENT. . . . . SP 291 - 294

02820 CHAIN LINK FENCE . . . . . SP 295 - 298

02833 BOLLARDS . . . . . SP 299 - 300

02841 PRECAST CONCRETE WHEEL STOPS . . . . . SP 301

02890 SIGNS . . . . . .SP 302 - 304

02920 TURF ESTABLISHMENT . . . . . SP 305 - 306

03050 PORTLAND CEMENT CONCRETE ..... SP 307 - 329

03210 CONCRETE REINFORCEMENT ..... SP 330 - 337

03300 CAST-IN-PLACE CONCRETE ..... SP 338 - 357

03400 PRECAST CONCRETE ..... SP 358 - 361

03410 PRECAST CONCRETE HANDHOLES & MANHOLES ..... SP 362 - 366

04065 MORTAR AND MASONRY GROUT ..... SP 367- 372

04810 UNIT MASONRY ASSEMBLIES ..... SP 373 - 381

05120 STRUCTURAL STEEL ..... SP 382 - 397

05520 HANDRAILS AND RAILING ..... SP 398 - 400

05580 METAL FABRICATIONS ..... SP 401 - 415

05650 GENERAL REQUIREMENTS FOR TRACK INSTALLATION ..... SP 416- 425

05651 RAIL WELDING ..... SP 426 - 443

05652 GENERAL REQUIREMENTS FOR TRACK MONITORING ..... SP 444 - 446

05653 TRACK MATERIALS ..... SP 447 - 451

05665 JOINTS AND JOINT BARS ..... SP 452 - 456

05671 BALLASTED TRACK INSTALLATION ..... SP 457 - 465

05673 DIRECT-FIXATION TRACK INSTALLATION ..... SP 466 - 493

05681 BALLASTED SPECIAL TRACKWORK ..... SP 494 - 500

05682 NO.10 TURNOUT PROCUREMENT ..... SP 501 - 507

05683 16'- 6" SWITCH POINT DERAIL PROCUREMENT ..... SP 508 - 513

05684 TRACK SWITCH MACHINE PROCUREMENT ..... SP 514 - 522

05695 136 POUND RE RAIL ..... SP 523 - 526

05696 136 POUND RE RAIL PROCUREMENT ..... SP 527 - 530

06100 ROUGH CARPENTRY . . . . . SP 531 - 539

06135 TIMBER CROSSTIES AND SWITCH TIES. . . . . .SP 540 - 546

06136 TIMBER CROSSTIES AND SWITCH TIES PROCUREMENT . . . SP 547 - 553

07210 BUILDING INSULATION . . . . . SP 554 - 558

07920 JOINT SEALANTS . . . . . SP 559 - 563

08110 STEEL DOORS AND FRAMES . . . . . .SP 564 - 568

08330 OVERHEAD COILING DOORS . . . . . .SP 569 - 572

08710 DOOR HARDWARE . . . . . .SP 573 - 579

09910 PAINTING . . . . . SP 580 - 588

13100 MODULAR OFFICE TRAILER . . . . . .SP 589 - 597

13125 PRE-ENGINEERED VEHICLE STORAGE BUILDING. . . . . .SP 598 - 639

13601 METAL INSPECTION PLATFORM. . . . . SP 640 - 672

15050 BASIC MECHANICAL MATERIALS AND METHODS . . . . . SP 673 - 684

15055 MOTORS . . . . . SP 685 - 691

15060 HANGERS AND SUPPORTS . . . . . .SP 692 - 703

15075 MECHANICAL IDENTIFICATION . . . . . .SP 704 - 712

15082 PLUMBING INSULATION . . . . . SP 713 - 735

15110 VALVES. . . . . SP 736 - 766
15140 DOMESTIC WATER PIPING . . . . . SP 767 - 775

15150 SANITARY WASTE AND VENT PIPING . . . . . SP 776 - 784

15211 GENERAL-SERVICE COMPRESSED-AIR PIPING. . . . . .SP 785 - 794

15251 GENERAL-SERVICE COMPRESSED-AIR EQUIPMENT. . . . . .SP 795 - 804

15410 PLUMBING FIXTURES. . . . . SP 805 - 812

15430 PLUMBING SPECIALTIES. . . . . SP 813 - 820

15485 ELECTRIC WATER HEATERS . . . . . SP 821 - 825

15767 PROPELLER UNIT HEATERS ..... SP 826 - 829

15815 METAL DUCTS ..... SP 830 - 835

15820 DUCT ACCESSORIES ..... SP 836 - 845

15838 POWER VENTILATORS ..... SP 846 - 850

15855 DIFFUSERS, REGISTERS AND GRILLES..... SP 851 - 853

15900 HVAC INSTRUMENTATION AND CONTROLS ..... SP 854 - 857

15940 SEQUENCE OF OPERATIONS..... SP 858 - 859

15990 TESTING, ADJUSTING, AND BALANCING ..... SP 860 -873

16020 BASIC ELECTRICAL MATERIALS AND METHODS FOR MODULAR OFFICE TRAILER AND PRE-ENGINEERED VEHICAL STORAGE ..... SP 874 - 905

16060 GROUNDING AND BONDING ..... SP 906 - 913

16111 DUCTS AND RACEWAYS ..... SP 914 - 920

16116 UNDERGROUND CONDUITS ..... SP 921- 927B

16120 SWITCH HEATERS AND STANDBY POWER CABLES..... SP 928 - 932

16122 LOW-VOLTAGE WIRE, CABLE FOR PIT AREA, AND PANELS ..... SP 933 – 948

16125 CONDUCTORS AND CABLES HIGH MAST LIGHTING, OUTDOOR LIGHTING AND PANTOGRAPH MAINTENANCE CANOPY AREA RECEPTACLES..... SP 949 - 960

16130 RACEWAYS AND BOXES ..... SP 961 - 965

16142 PIT RECEPTACLES AND SWITCHES..... SP 966 - 975

16275 SUBSTATION TRANSFORMERS ..... SP 976 - 982

16280 STANDBY AUXILIARY POWER CONTROL CABINET ..... SP 983 - 989

16340 MEDIUM-VOLTAGE SWITCHING AND PROTECTION ASSEMBLIES ..... SP 990 - 999

16341 MEDIUM VOLTAGE METAL-CLAD SWITCHGEAR . . . . . .SP 1000 - 1014

16430 LOW VOLTAGE DRAWOUT METAL ENCLOSED SWITCHGEAR . . . . . SP 1015 - 1027

16450 OUTDOOR WALK-IN ELECTRICAL EQUIPMENT HOUSING . . . . . SP 1028 - 1055

16500 PIT LIGHTING . . . . . SP 1056 - 1067

16510 EXTERIOR CANOPY LUMINAIRES . . . . . SP 1068 - 1071

16520 HIGH MAST LIGHTING . . . . . SP 1072 - 1077

16600 SWITCH TRACK SNOWMELTER . . . . . SP 1078 - 1088

17101 GENERAL REQUIREMENTS FOR THE SIGNALING SYSTEM . . . . . .SP 1089 - 1100

17117 ELECTROMAGNETIC COMPATIBILITY . . . . . .SP 1101 - 1110

17125 TRACK SWITCH MACHINE LAYOUTS. . . . . SP 1111 - 1117

17126 UNDERGROUND SIGNAL DUCT WORK . . . . . .SP 1118 - 1127

17161 WAYSIDE CASE . . . . . SP 1128 - 1132

17173 POWER SUPPLIES, BATTERY CHARGERS, ELECTRICAL, AND ELECTRONIC COMPONENTS . . . . . SP 1133 – 1142

17211 SIGNAL FOUNDATIONS. . . . . .SP 1143 - 1145

17215 GRID LAYOUTS AND GROUNDING SYSTEMS . . . . . SP 1146 - 1149

17221 INTERIOR AND EXTERIOR WIRE AND CABLE . . . . . SP 1150 - 1156

17231 POWER DITRIBUTION . . . . . SP 1157 - 1159

17251 TESTS AND INSPECTION . . . . . SP 1160 - 1167

17263 TAGS AND LOCKS . . . . . SP 1168 - 1171

17271 MANUALS AND TRAINING . . . . . SP 1172 - 1178

17273 INITIAL PROVISIONING AND EQUIPAGE . . . . . SP 1179 - 1182

17301 OCS - GENERAL REQUIREMENTS . . . . . SP 1183 - 1186

17305 OCS - CATENARY. . . . . SP 1187 - 1196

17311 OCS - CATENARY FOUNDATIONS AND ANCHORS. . . . . SP 1197 - 1212

17313 OCS - SUPPORT STRUCTURES. . . . . SP 1213 - 1223

17314 OCS - SUPPORT STRUCTURES OUTSIDE YARD LIMITS. . . SP 1224 - 1232

17316 ELECTRIFICATION BONDING AND GROUNDING. . . . . SP 1233 - 1238

17319 OCS - SUPPORT AND REGISTRATION DEVICES. . . . . SP 1239 - 1243

17327 OCS - INSULATORS. . . . . SP 1244 - 1247

17329 OCS - SECTION INSULATORS. . . . . SP 1248 - 1251

17331 RAIL BONDING. . . . . .SP 1252 - 1256

17333 OCS - FITTINGS AND HARDWARE. . . . . SP 1257 - 1262

17335 OCS - SWITCHES. . . . . SP 1263 - 1267

17343 OCS - FEEDERS AND RAIL RETURN CONDUCTORS . . . . . .SP 1268 - 1270

18025 SAFETY, SECURITY AND AVAILABILITY
REQUIREMENTS . . . . . SP 1271 - 1300

APPENDIX A – LIST OF CONTRACT DRAWINGS

APPENDIX B – CONTRACT DATA REQUIREMENT LIST

APPENDIX C – FEDERAL MINIMUM WAGE REQUIREMENT

APPENDIX D – BUY AMERICA REQUIREMENT

APPENDIX E – AMTRAK SPECIFICATIONS

APPENDIX F – DISTRICT OF COLUMBIA DEPARTMENT OF
TRANSPORTATION DETAILS

APPENDIX G – DISTRICT OF COLUMBIA WATER AND SEWER AUTHORITY

APPENDIX H – PEPCO SPECIFICATIONS

APPENDIX I – LAYDOWN/STAGING AREA

Item	Section	Description	Estimate of Quantity	Unit	Unit Price	Total Price
1	01130	Mobilization (8% Maximum of Base Bid)	1	LS		
2	01210	Miscellaneous Work Allowance	1	ALL	ALL	$1,600,000
3	01450	Quality Assurance and Quality Control	1	ALL	ALL	$500,000
4	01500	Temporary Construction Fence	3,000	LF		
5	01523	Engineer's Office Type 3	1	LS		
6	01523	Motor Vehicle	30	MO		
7	01810	Commissioning	1	LS		
8	02310	Test Pit Excavation	10	CY		
9	02315	Excavation	36,747	CY		
10	02315	Disposal of Excavated Materials	34,596	CY		

Item	Section	Description	Estimate of Quantity	Unit	Unit Price	Total Price
11	02370	Stabilized Construction Entrance	150	TON		
12	02370	Rehabilitate Stabilized Construction Entrance	300	TON		
13	02370	Earth Dike	2339	LF		
14	02370	Riprap for Sediment Control	25	TON		
15	02370	Stone Outlet Structure	10	TON		
16	02370	Temporary Gabion Outlet Structure	2	EA		
17	02370	Super Silt Fence	464	LF		
18	02370	Temporary Seed	130	LB		
19	02370	Temporary Mulch	1500	SY		
20	02370	Portable Sediment Tank	4	EA		

Item	Section	Description	Estimate of Quantity	Unit	Unit Price	Total Price
21	02370	At Grade Inlet Protection	13	EA		
22	02370	Ballast Drain Inlet Protection	8	EA		
23	02370	Soil Stabilization Matting	3826	SY		
24	02370	Asphalt Berm	201	LF		
25	02488	Soldier Pile Retaining Wall A	1	LS		
26	02488	Soldier Pile Retaining Wall B	1	LS		
27	02488	Soldier Pile Retaining Wall C	1	LS		
28	02488	Soldier Pile Retaining Wall D (Ex. Wall Modifications)	1	LS		
29	02510	8-Inch D.I.P. Water Main	316	LF		
30	02510	6-Inch D.I.P. Water Main	150	LF		

Item	Section	Description	Estimate of Quantity	Unit	Unit Price	Total Price
31	02510	4-Inch D.I.P. Water Main	2210	LF		
32	02510	3/4-Inch Copper Service Pipe	115	LF		
33	02510	4-Inch Gate Valve and Box	3	EA		
34	02510	6-Inch Gate Valve and Box	4	EA		
35	02510	8-Inch Gate Valve and Box	1	EA		
36	02510	Fire Hydrant	2	EA		
37	02510	Yard Hydrant	15	EA		
38	02510	6-Inch Water Meter and Vault	1	EA		
39	02510	Concrete encasement	7	CY		
40	02510	Flowable Fill	1	CY		

Item	Section	Description	Estimate of Quantity	Unit	Unit Price	Total Price
41	02530	Grinder Pump	1	EA		
42	02530	48-inch Precast Sanitary Manhole	9	EA		
43	02530	Square Sanitary Manhole SMH-11	1	EA		
44	02530	Sanitary Environ-pans	12	EA		
45	02530	4" Sanitary Sewer Pipe (PVC)	50	LF		
46	02530	6" Sanitary Sewer Pipe (PVC)	1510	LF		
47	02530	8" Sanitary Sewer Pipe (PVC)	633	LF		
48	02530	4" vertical Sanitary Sewer Connection Pipe (PVC)	120	LF		
49	02530	1.1/4" Sanitary Forcemain and 4" Casing Pipe-Directional Boring (HDPE)	273	LF		
50	02530	8" Sanitary Sewer Pipe – Direction Boring (HDPE)	350	LF		

Item	Section	Description	Estimate of Quantity	Unit	Unit Price	Total Price
51	02530	Concrete Encasement	11	CY		
52	02620	Underdrain	2570	LF		
53	02620	8" Underdrain Outlet	20	LF		
54	02620	10" Underdrain Outlet	50	LF		
55	02620	Concrete Encasement	8	CY		
56	02630	8-inch HDPE Pipe	260	LF		
57	02630	15-inch HDPE Pipe	482	LF		
58	02630	18-inch HDPE Pipe	121	LF		
59	02630	24-inch HDPE Pipe	210	LF		
60	02630	12-inch RCP Pipe CLASS V	124	LF		

Item	Section	Description	Estimate of Quantity	Unit	Unit Price	Total Price
61	02630	15-inch RCP Pipe CLASS V	141	LF		
62	02630	18-inch RCP Pipe CLASS V	279	LF		
63	02630	24-inch RCP Pipe CLASS V	88	LF		
64	02630	30-inch RCP Pipe CLASS V	600	LF		
65	02630	38-inch by 24-inch HERCP Pipe CLASS V	50	LF		
66	02630	Removal of Existing Pipe	178	LF		
67	02630	Single Grate Catch Basin	5	EA		
68	02630	Double Grate Catch Basin	1	EA		
69	02630	Type I Ballast Drain	5	EA		
70	02630	Type II Ballast Drain	1	EA		

Item	Section	Description	Estimate of Quantity	Unit	Unit Price	Total Price
71	02630	Trench Drain	15	LF		
72	02630	Special Catch Basin	3	EA		
73	02630	8-inch Slotted Drain	1780	LF		
74	02630	48-inch Precast Manhole	7	EA		
75	02630	60-inch Precast Manhole	3	EA		
76	02630	72-inch Precast Manhole	3	EA		
77	02630	Removal of Existing Drainage Structure	3	EA		
78	02630	Modification to Existing Drainage Structure	3	EA		
79	02630	Concrete Ditch	275	SY		
80	02630	SWM Storage Structure S-1	1	EA		

Item	Section	Description	Estimate of Quantity	Unit	Unit Price	Total Price
81	02630	SWM Storage Structure S-2	1	EA		
82	02635	Railroad Spill Collection Pan	225	LF		
83	02635	Oil/water Separator	1	EA		
84	02635	48-Inch Precast Oily Stormwater Manhole	3	EA		
85	02635	Oily Stormwater Trench Drain	919	LF		
86	02635	4-Inch oily stormwater pipe (PVC)	375	LF		
87	02635	6-Inch oily stormwater pipe (PVC)	985	LF		
88	02635	8-Inch oily stormwater pipe (PVC)	70	LF		
89	02635	10-Inch oily stormwater pipe (PVC)	343	LF		
90	02635	4-Inch Vertical Oily Stormwater Connection Pipe (PVC)	105	LF		

Item	Section	Description	Estimate of Quantity	Unit	Unit Price	Total Price
91	02635	Concrete encasement	110	CY		
92	02636	Stormfilter SF-1	1	EA		
93	02636	Stormfilter SF-2	1	EA		
94	02720	6" Aggregate Base Course	5,570	SY		
95	02725	Sub-ballast	1064	CY		
96	02726	Ballast	4083	Ton		
97	02726	Geotextile Class SE	2900	SY		
98	02728	Ballast Procurement	476	Ton		
99	02745	Hot Mix Asphalt Superpave 9.5 mm , PG 64-22	537	Ton		
100	02745	Hot Mix Asphalt Superpave 25mm, PG 64-22	1,073	Ton		

Item	Section	Description	Estimate of Quantity	Unit	Unit Price	Total Price
101	02750	6" Portland Cement Concrete	1,010	SY		
102	02763	5-Inch White Waterborne Traffic Paint	260	LF		
103	02770	Type B Ballast Curb	515	LF		
104	02805	Rubberized Modular Crossing System	30	TF		
105	02806	Precast Concrete Grade Crossing System	42	TF		
106	02807	Rubberized Modular Crossing System Procurement	152	LF		
107	02820	Chain Link Fence	1,580	LF		
108	02833	Bollards	2	EA		
109	02841	Precast Concrete Wheel Stops	6	EA		
110	02890	Signs	32	SF		

Item	Section	Description	Estimate of Quantity	Unit	Unit Price	Total Price
111	02920	Furnishing and Placing Topsoil 2-inch depth	1220	SY		
112	02920	Furnishing and Placing Topsoil 4-inch depth	4100	SY		
113	02920	Turfgrass Establishment	5320	SY		
114	03300	Transition Slab	24	CY		
115	03300	Direct Fixation Track Slab	111	CY		
116	03300	Bumper Posts Slab	6	CY		
117	03300	Concrete for Light Foundation	15	CY		
118	03300	Inspection Pit Track 5	1	LS		
119	03300	Inspection Pit Track 6	1	LS		
120	03300	Retaining Wall F	1	LS		

Item	Section	Description	Estimate of Quantity	Unit	Unit Price	Total Price
121	03410	Handholes (36 x 36 x 36)	4	EA		
122	03410	Handholes (17 x 30 x 18)	1	EA		
123	03410	Manhole (6 x 6 x6)	1	EA		
124	05653	Bumping Posts	3	EA		
125	05653	Fixed Blue Flag Manual Derail	3	EA		
126	05665	Bonded Insulated Joints	3	EA		
127	05671	Ballasted Track Installation	2016	TF		
128	05673	Direct Fixation Track on Plinths	172	TF		
129	05673	Direct Fixation Track on Inspection Pits	934	TF		
130	05673	Direct Fixation Track at Bumping Posts	18	TF		

Item	Section	Description	Estimate of Quantity	Unit	Unit Price	Total Price
131	05681	Furnish and Install No. 10 Turnout	2	EA		
132	05682	No.10 RH Turnout Procurement	1	Each		
133	05683	16'-6" Split Switch Point Derail Procurement	1	Each		
134	05684	Track Switch Machine Procurement	2	Each		
135	05696	136 RE Rail Procurement	19	Ton		
136	06136	Timber Crossties Procurement	201	EA		
137	13100	Modular Office Trailer	1	LS		
138	13125	Pre-Engineered Vehicle Storage Bldg	1	LS		
139	13601	Inspection Platform	1	LS		
140	15251	General Service Compressed Air System	1	LS		

Item	Section	Description	Estimate of Quantity	Unit	Unit Price	Total Price
141	16060	Ground Rods	30	EA		
142		Not Used				
143	16116	2-5" Schedule 80 PVC Concrete Encased Conduit-Trenched	200	LF		
144	16116	3 IN. Sch. 80 PVC Conc. Encased Conduit-Trenched	1100	LF		
145	16116	Standby Power No 1 Concrete Encased Conduit-Trenched	126	LF		
146	16116	Standby Power No 2 Concrete Encased Conduit-Trenched	210	LF		
147	16116	Standby Power No 3 Concrete Encased Conduit-Trenched	43	LF		
148	16116	Standby Power No 4 Concrete Encased Conduit-Trenched	263	LF		
149	16116	Conduit PVC 80 1" Dia	2765	LF		
150	16116	Conduit PVC 80 2" Dia	3800	LF		

Item	Section	Description	Estimate of Quantity	Unit	Unit Price	Total Price
151	16116	Conduit 80 4" Dia	100	LF		
152	16120	Cables (500 MCM)	6,800	LF		
153	16120	Cables (#14)	4,200	LF		
154	16120	Ground Cable #1/0	2,100	LF		
155	16120	Cable #4, 2 KV	3,500	LF		
156	16120	Cable #4 /0	200	LF		
157	16120	Cables #6, 600V	3500	LF		
158	16122	Low Voltage Wire	1	LS		
159	16125	No. 6 AWG THHN (GREEN) GROUND WIRE	1100	LF		
160	16125	1/C No. 4 AWG THHN/THWN	2200	LF		

Item	Section	Description	Estimate of Quantity	Unit	Unit Price	Total Price
161	16125	1/C No. 10 AWG THHN/THWN	140	LF		
162	16130	Polymer Concrete Electrical Handbox	5	EA		
163	16130	1 1/2 in Rigid Gal. Steel Conduit-Attached	210	LF		
164	16130	Electrical Steel Junction Box- Attached	2	EA		
165	16142	Pit Switches	6	EA		
166	16142	Pit Receptacles	48	EA		
167	16275	Substation Transformers	2	EA		
168	16280	Standby Power Concrete Pads	6	EA		
169	16280	Standby Power Cabinets	3	EA		
170		Not Used				

Item	Section	Description	Estimate of Quantity	Unit	Unit Price	Total Price
171	16340	Medium Voltage Switching and Protection Assemblies Ground Grid	1	EA		
172	16340	Medium Voltage Switching and Protection Assemblies Concrete Pad	1	EA		
173	16341	Medium Voltage Metal Clad Switchgear	1	EA		
174	16341	Medium Voltage Metal Clad Switchgear Ground Grid	1	EA		
175	16341	Medium Voltage Metal Clad Switchgear Concrete Pad	1	EA		
176	16430	Low Voltage Drawout Metal Enclosed Switchgear	1	EA		
177	16500	Pit Lighting	48	EA		
178	16510	Pantograph Maintenance Canopy Lighting and Receptacles	1	LS		
179	16520	60 Ft. HM Round Steel Pole with 1000W Metal Halide Luminaries and Lowering Gear	5	EA		
180	16520	35 Ft. Round Steel Pole with 1000W Clear Metal Halide Floodlights	1	EA		

Item	Section	Description	Estimate of Quantity	Unit	Unit Price	Total Price
181	16600	Snowmelter Control Cabinet	1	EA		
182	16600	Switch Heaters	2	EA		
183	16600	Switch Heater Junction Box	6	EA		
184	16600	Snow Detector Controls & Sensor	2	EA		
185	17125	Track Switch Machine Layout	2	EA		
186	17126	Signal Conduit	2,063	LF		
187	17126	Concrete Encasement	24	CY		
188	17126	Signal Pullboxes	6	EA		
189	17161	Wayside Case	1	EA		
190	17211	Case and Pushbutton Foundations	2	EA		

Item	Section	Description	Estimate of Quantity	Unit	Unit Price	Total Price
191	17221	Interior and Exterior Wire and Cable	1	LS		
192	17251	Test & Inspection	1	LS		
193	17271	Manuals and Training	1	LS		
194	17273	Initial Provisioning	1	LS		
195	17305	New 2-Wire Catenary	0.78	Miles		
196	17305	OCS Switches	4	EA.		
197	17305	Key Interlocking System	1	L.S.		
198	17305	OCS Electrical Testing & Acceptance	1	L.S.		
199	17311	Catenary Pole Foundations	5	EA.		
200	17311	Catenary Drilled Pile Foundations	2	EA.		

Item	Section	Description	Estimate of Quantity	Unit	Unit Price	Total Price
201	17311	Guy Anchor Foundations	2	EA.		
202	17311	Survey and Locate all Foundations	21	EA.		
203	17313	OCS Structural Steel Support	1	L.S.		
204	17313	Temporary Wood Pole Removal	5	EA.		
205	17314	OCS Structural Steel Outside Yard Limits (Procurement Only)	1	L.S.		
206	17316	Electrification Bonding & Grounding	1	L.S.		
207	17331	Rail Bonding	2	EA		
208	18025	Safety, Security and Availability	1	LS		
209	02465	18" Diameter Caisson	32	LF		
210	02465	30" Diameter Caisson	114	LF		

Item	Section	Description	Estimate of Quantity	Unit	Unit Price	Total Price
211	02465	48" Diameter Caisson	90	LF		
212	16116	4-5" Fiberglass Conduits	40	LF		
213	16116	4-5" Schedule 40 PVC Concrete Encased Conduits	120	LF		
214	02510	8" Backflow Preventer Assembly and Vault	1	EA.		
215	02315	Removal of Unsuitable Material (Contingent)	1000	CY		
216	02315	Selected Backfill (Contingent)	1000	CY		
217	16116	Conduit PVC 80 3" Dia.	2500	LF		
218	16120	Cable 4/0, 600V	10000	LF		

Basis of Award: Total amount of items 001 thru 218 _____
(figures)

_____
(words)

Item	Section	Description	Estimate of Quantity	Unit	Unit Price	Total Price
219		Insurance Premium (Contingency)	LS	LS		

This amount will only be added to the base bid in the event that the bidder is excluded from the wrap-up insurance program or the program is terminated mid-term. The Insurance Premium Worksheet must be attached to the bid.

LIABILITY INSURANCE REQUIREMENTS

MARYLAND TRANSIT ADMINISTRATION (MTA) will utilize an Owner Controlled Insurance Program (OCIP) for this construction project.

What is an OCIP?

The MTA OCIP will provide General Liability, Workers' Compensation, and Excess Liability coverage for contractors and subcontractors while performing Work on the project site. The Work specified in your Bid Request qualifies for the OCIP, therefore, General Liability, Workers' Compensation, and Excess Liability will be purchased on your behalf, for this Work. However, you must continue to purchase General Liability, Automobile Liability and Workers' Compensation, and Excess Liability for Work performed *away from* the Project site.

A Builder's Risk insurance policy will also be provided for the benefit of the OCIP participants. You need not provide such insurance, as the interest of all parties in the Work will be covered by this policy. Such insurance will NOT cover your own tools and equipment.

Enclosed herein as Exhibit B – Indemnities and Insurance is detailed information about this program.

Bids:

Because General Liability, Workers' Compensation, and Excess Liability coverage will be provided by the OCIP, you will need to bid all Work with insurance costs for General Liability, Workers' Compensation, and Excess Liability separately identified as an add/alternate to your bid price. The cost should be separated by line of insurance utilizing the Insurance Cost Worksheet provided in the Bid Form package and as Exhibit A of this form. This form must be submitted as part of your bid package. For your information, the forms that will need to be completed by the successful bidder as part of the contract package are included herein as Exhibit C.

It is important that these insurance costs be as accurate as possible, as they have a direct bearing on the competitiveness of your bid.

If in doubt, your insurance agent should be able to give you the insurance cost for Work to be done at the site. To enable him to calculate that cost, you should be prepared to give your agent your payrolls (by workers' compensation class code) for Work to be performed on this Project.

Safety:

A critical part of any construction project is job site safety. An OCIP program is designed to standardize safety procedures to enhance your safety efforts. Representatives

of AIG, the OCIP insurer, the Construction Manager, and Aon Risk Services, Inc. of MD will be available to assist you in these efforts. You will be expected to comply with the safety requirements established by MTA and the Construction Manager in conjunction with the OCIP carrier. The Maryland Transit Administration Project Safety Plan is included in the Contract Specification Book as Form PSP.

Claims:

A claims representative will assist you in reporting any claims. You will be given an insurance manual that will identify the basic information necessary to report a claim. The forms and instructions contained in the manual should not be significantly different from those you are currently using.

Contractor Provided Insurance:

Because an OCIP is limited to Work performed at a specific location (except as provided by the Builder's Risk), you will be required to provide General Liability, Workers' Compensation, and Property insurance, if applicable, for any activities away from the project site, or performed for someone other than MTA.

You will also need to continue other coverages, such as:

⇒ Automobile liability and physical damage

⇒ Inland Marine coverage for your tools and equipment

⇒ Umbrella/Excess liability for limits over the maximum limit to be provided by MTA (limit to be advised)

⇒ Any other coverage you elect to continue

Alternate program option:

MTA reserves the option **not** to utilize an OCIP program for this project or to discontinue it. In such a case, you and any subcontractors will be expected to provide insurance coverages as required by the contract at a cost commensurate with the insurance deductions in your original bids.

Summary of Owner Provided Insurance
Workers Compensation

Coverage A - Statutory Limits

Coverage B - Employers Liability

$2,000,000 Bodily Injury by Accident

$2,000,000 Bodily Injury by Disease

$2,000,000 Policy Limit by Disease

Commercial General Liability

The policy includes Completed Operations Coverage for a period of 10 years after acceptance of the work by Owner with a limit of liability of $2,000,000 each occurrence/$4,000,000 general aggregate for Bodily Injury/Property Damage.

Excess Liability

$50,000,000 each occurrence
$50,000,000 aggregate

Builder's Risk Insurance:

Loss Limit (Total Liability per Occurrence):	$	50,000,000
Sub limits:		
Building Ordinance or Law (Coverages A, B & C Combined)	$	2,500,000
Debris Removal per Occurrence	$	2,500,000
Delay in Completion/Soft Costs	$	TBD
Loss Adjustment Expenses	$	100,000
Expediting Expenses per Occurrence	$	100,000
Fire Department Service Charges per Occurrence	$	50,000
Inland Transit	$	500,.000
Offsite Temporary Storage per Occurrence	$	1,000,000
Physical Damage per Occurrence	$	50,000,000
Valuable Papers and Records	$	100,000
Pollution Cleanup	$	10,000
Trees, Shrubs, Plants and Landscaping per Occ (Named Perils Only)	$	25,000
Annual Aggregate Limits of Liability:		
Earthquake	$	50,000,000
Flood (Depending on Flood Zones)	$	50,000,000

The Owner will purchase for the benefit of all Approved Contractors, Subcontractors and Vendors, all-risk Builder's Risk insurance in the amounts sufficient to cover replacement cost of the work in progress and the property located at the Project Site. Such insurance will specifically protect the interest of the Contractor in the Work, but **it will not cover Contractor's equipment, which will <u>not</u> become a permanent part of the Work to be accepted by the Owner.**

Notwithstanding the contractor's deductible responsibilities as stated in Section I, Exhibit D, Contractor's total liability for loss of or damage to the Work shall be limited to the recoveries from the Owner-provided Builder's Risk Insurance".

EXHIBIT A

INSURANCE COST WORKSHEET

AND

INSTRUCTIONS FOR COMPLETING INSURANCE COST WORKSHEET

Error! Objects cannot be created from editing field codes.Form-1a	**Insurance Cost Worksheet** (Fixed Price Type Contracts) Numbers reference attached instructions	MTA OCIP	Page 1 of 2

A. Contractor Information:

Federal ID # or Soc. Sec. #: 1

	Business Information *(headquarters)*	Contact Information *(address questions to..)*
Company Name & dba: Contact Name & Title:	2	3
Address:		
City, State, Zip Code:		
Telephone:		
Fax:		
E.mail Address:		

B. BID INFORMATION:

Bid Package No.: 1

Description of Work: 2

Proposed Contract Price $: 3

Are you Submitting a bid to MTA: 5 ☐ Yes ☐ No

Amount of Self Performed Work $: 4

If No, identify to whom: 6

C. Workers Compensation Insurance Information for Work Described Above: (a) *(attach a separate sheet if necessary)*

a State	b Class Code	C Description	d Rate *(per $100 payroll)*	e Man-hours	f Payroll	G WC Premium *(Payroll * Rate / 100)*
1						
Totals				2	3	4

Identify the Amount of Your Claim Retention 5

Your Company's Workers Compensation Experience Modifier: 6

Modified Premium *(line C4 x C6)*: 7

Employers Liability Rate: 8

Employers Liability Premium: 9

10 Modification & Discount Premium Factors		11 Rate	12 Amount
Mod 1:	+ or -		
Mod 2:	+ or -		
Mod 3:	+ or -		
Mod 4:	+ or -		
Mod 5:	+ or -		

Total Modification Amount *(Total of all amounts entered in column C12)*: 13

Total Workers Compensation Premium *(line C7 + C9 + C13)*: 14

D. General Liability: (a)

Rate: 1 _____

2 Based On: ☐ Total Payroll (C3) ☐ Contract Price (B3) ☐ Other _____

3 Rate factor: ☐ Per 100 ☐ Per 1,000

4 Identify the Amount of Your Claim Retention: _____

GL Premium *(D2 x D1 ÷ D3)*: 5

Excess/Umbrella Liability: (a)

Rate: 6 _____

7 Based On: ☐ Total Payroll (C3) ☐ Contract Price (B3) ☐ Other _____

8 Rate factor: ☐ Per 100 ☐ Per 1,000

Excess/Umbrella Premium *(D7 x D6 ÷ D8)*: 9

E. Builder's Risk/Installation Floater: (1)

Rate: 1 _____

2 Rate factor ☐ Per 100 ☐ Per 1,000

Builder's Risk/Installation Floater Premium *(B3 x E1 ÷ E2)*: 3

F. Other Insurance Premiums: (1) *(Enter total premium costs identified on page 2)*

1

G. Totals

Total of all Insurance Premiums *(Total of lines C14 + D5 + D9 + E3 + F1)*: 1

Overhead & Profit on Insurance Prem. %: 2 15%

O/H & Profit Amount *(G1 x G2)*: 3

Total Initial Insurance Cost *(Total of lines G1 + G3)*: 4

Contractor's Initial Insurance Cost Rate *(Line G4 divided by total payroll in line C3 x 100)*: 5

H. Signature Block :

I verify the information presented above and attachments are correct:

Name: _____ (please print) Date: _____

Title: _____ Signature: _____

Completion of this form is a required part of your bid and must accompany your bid documents. Complete a separate form for each contractor, known subcontractor(s) and trades not currently awarded to a subcontractor. Duplicate this form as needed.

(a) **Please provide copies of the following documents to support your insurance cost calculations:**

- ☑ Schedule of Values
- ☑ Workers Compensation declaration and rate pages
- ☑ Experience Modification worksheet
- ☑ General Liability declaration and rate pages
- ☑ Umbrella/Excess Liability declaration and rate pages
- ☑ 5 years actual loss experience for each line of coverage in which Contractor retains more than $5,000.

Error! Objects cannot be created from editing field codes. Form-1a	**INSURANCE COST WORKSHEET** **(Instructions for Fixed Price Type Contracts)**	MTA OCIP Page 2 of 2

Complete a separate form for each contractor, known subcontractor and trade not currently awarded to a subcontractor. Duplicate this form as needed. **Completion of this form is a required part of your bid and must accompany your bid documents.**

A. Contractor Information

1 Enter your company's Federal ID number. This number can be found on filings made to the federal government such as your tax return.
2 Enter your company's name, mailing address and phone/fax number for your company's main office location in the space provided below.
3 Enter the name of the person Aon should contact if questions arise. Include the mailing address, phone/fax and e.mail address if different than A-2

B. Bid Information

1 Enter the Bid Package Number, Contract Number or Purchase Order Number that was included in Maryland Transit Administration's originating documentation.
2 Provide a brief description of the work you will be performing at the project site.
3 Identify the total amount of your bid. Include both labor and material.
4 Identify the amount of work that you anticipate will be self-performed. Include both labor and material.
5 Check the appropriate box that identifies if you contract directly with Maryland Transit Administration's or are a subcontractor.
6 If you are a Subcontractor, identify the entity with whom you are under contract.

C. Workers Compensation Insurance Information *(Duplicate or attach additional sheets if necessary. You may create an electronic version of this document if all requested information is included):*

1 a Enter the two-letter abbreviation for the state in which the work will be performed.
b Enter each Workers Compensation class code that applies to your work identified in B2. *(Most states use a 4 digit Number)*
c Enter the Workers Compensation class code description that applies to each class code identified in C1b.
d Enter the Workers Compensation rate that applies to the specified class code.
e Enter the estimated Man-hours required to complete the described work for each Workers Compensation class code.
F Enter the estimated Payroll required to complete your work. Use only unburdened payroll and exclude the premium portion of any overtime pay.
G Calculate the WC Premium by multiplying the Payroll (C1f) by the Rate (C1d) and dividing the result by 100. Repeat this calculation for each WC class code.
2 Total the estimated Man-hours for each class code. Be sure to include information from additional pages if used.
3 Total the estimated Payroll for each class code. Be sure to include information from additional pages if used.
4 Total the Workers Compensation Premium for each class code. Be sure to include information from additional pages if used.
5 Enter the amount of the Claim Retention / Deductible your company has on their existing Workers Compensation.
6 Enter your WC Experience Modifier. This Information can be located on your Workers Compensation policy or on your NCCI Bureau Rating Sheet.
7 Calculate the Modified Premium by multiplying the WC Premium (C4) by the Experience Modifier (C6).
8 Enter your Employer's Liability Insurance Rate. This information can be found in your Workers Compensation policy.
9 Calculate your Employer's Liability Premium by multiplying the Modified Premium (C7) by the Employer's Lia. Rate (C8).
10 Identify the Modifiers that apply to your Workers Compensation Premium. This information can be located on your Workers Compensation Policy.
11 Enter the Rate for each identified Modifier. The information can be located on your Workers Compensation Policy
12 Calculate the Modified Premium Factor Amount by multiplying the Modified Premium (C7) by the Modified Premium Rate (C11) and dividing by 100. Be sure to identify if the Modification factor is an addition or reduction to your premium.
13 Total the Modified Premium Amounts by adding the numbers in column C12.
14 Calculate the Total Workers Compensation Premium by adding the Modified Premium (C7) to the Employer's Lia. Premium (C9) and adding the Premium Modifications (C12).

D. General Liability & Umbrella/Excess Liability Insurance

1 Enter the General Liability Rate. This number can be found on your General Liability Policy
2 Identify the base the General Liability Rate applies to. If the base is other than Payroll or Revenue, enter the amount and the description in the space provided.
3 Identify the General Liability Rate factor by marking the box.
4 Identify the amount of your Claim Retention.
5 Calculate the General Liability Premium by multiplying the Bases (D2) by the Rate (D1) and dividing by the factor (D3).
6 Enter the Excess/Umbrella Liability Rate. This number can be found on your Excess/Umbrella Liability Policy
7 Identify the base the Excess/Umb. Liability Rate applies to. If the base is other than Payroll or Revenue, enter the amount and description in the space provided.
8 Identify the Excess/Umbrella Liability Rate factor by marking the box.
9 Calculate the Excess/Umbrella Liability Premium by multiplying the Bases (D7) by the Rate (D6) and dividing by the factor (100 or 1,000).

E. Builder's Risk/Installation Floater

1 Enter the Builder's Risk/Installation Floater Rate. Locate this information on your Property Policy or Builder's Risk Policy.
2 Identify the base factor that it applies to (100 or 1,000).
3 Calculate the Premium by multiplying the Proposed Contract Price (B3) by the Rate (E1) and dividing it by the Factor (E2).

F. Other Insurance Premiums

1 For each of the Insurance Lines of Coverage identified below, Identify the Rate, Base and Factor. Calculate the Premium by multiplying the Base x Rate ÷ Factor. Total the Other Insurance Premiums in the space provided and carry that amount to the front page.

Line of Coverage	Rate	Base	Factor	Premium	Total Premium

G. Totals

1 Calculate the Total of all Insurance Premium by adding Workers Compensation (C14), General Liability (D5), Excess/Umbrella Liability (D9), Builder's Risk/Installation Floater (E3), and Other Insurance Premiums (F1).
2 Identify the Overhead & Profit Percentage that was applied to this project during the tabulation of the Proposed Contract Price.
3 Calculate the Overhead & Profit Amount by Multiplying the Total of all Insurance Costs (G1) by the Overhead & Profit Percentage (G2).
4 Calculate the Total Initial Insurance Cost by adding the Overhead & Profit Amount (G3) with the Total of all Insurance Premium (G1)
5 Calculate your rate by Dividing the Total Initial Insurance Cost (G4) by the Estimated Payroll (C3) and multiplying by 100.

H. **Signature Block:** This form must be signed by a representative of your company with the authority to Verify the information is correct.	
Note: Please provide copies of the following documents as part of your submittal:	
☑ Schedule of Values	☑ General Liability declaration and rate pages
☑ Workers Compensation declaration and rate pages	☑ Umbrella/Excess Liability declaration and rate pages
☑ Experience Modification worksheet	☑ 5 years actual loss experience for each line of coverage in which Contractor retains more than $5,000.

EXHIBIT B

INDEMNITIES AND INSURANCE

Indemnities and Insurance

1.1 Indemnities.

1.1.1 To the fullest extent permitted by law, Contractor shall indemnify, defend (at Owner's request and through counsel reasonably acceptable to Owner) and hold harmless Owner from and against all claims, demands, causes of action, damages, liabilities, losses and expenses, including attorneys' and consultants' fees and expenses (collectively, "Claims"), arising out of or resulting from performance of Work, provided such Claims are attributable to bodily injury, sickness or death, or injury to or destruction of tangible property, or infringement of any patents, copyrights, trademarks, trade secrets or other intellectual property right; provided that such Claims are caused in whole or in part by the active or passive negligence or willful misconduct of Construction Manager, contractors, and subcontractors. With respect to Claims made after the expiration of the Completed Operations coverage of the Project Commercial General Liability Insurance procured by Owner at its expense under Paragraph 1.3.2(b), the foregoing indemnity shall apply only to the extent of the active negligence or willful misconduct of the Contractors, and/or subcontractors.

1.1.2 The foregoing indemnity shall apply regardless of whether such claim, demand, cause of action, damage, liability, loss or expense is caused in part by the active or passive negligence of an Indemnity, and regardless of whether liability without fault is imposed or sought to be imposed on an Indemnity, but shall not extend to claims, demands, causes of action, damages, liabilities, losses or expenses to the extent they result from the sole negligence or willful misconduct of such Indemnity. Nothing herein shall be deemed to abridge the rights, if any, of Owner or Contractor to seek contribution from other parties where appropriate.

1.1.3 With respect to claims against any person or entity indemnified under Paragraph 1.1.1 by an employee of the Contractor, or subcontractor, or anyone directly or indirectly employed by any of them or for whose acts any of them may be liable, the indemnification obligation under Paragraph 1.1.1 shall not be limited by a limitation on amount or type of damages, compensation or benefits payable under workers' compensation acts, disability benefit acts or other employee benefit acts.

1.1.4 Neither Contractor nor subcontractor, of any tier, shall place or release, or cause to be placed or released, any Hazardous Materials in, on or under the Project Site, or into any adjacent or nearby watercourse, body of water or wetlands, except in strict compliance with all applicable Laws and Permits. Contractor shall be responsible for any Hazardous Materials deposited, released or disposed of in, on or under the Project Site or into any adjacent or nearby watercourse, body of water or wetlands on or after the date of the Notice to Proceed by any of the foregoing persons (excluding Indemnitees) only, including if necessary any cleanup or remediation activities, and shall indemnify and hold harmless the Indemnitees from and against any claims, liabilities (including under CERCLA), damages, losses and expenses (including reasonably and actually incurred attorneys' fees) arising out of or resulting from the deposit, release or disposal of any

Hazardous Materials in, on or under the Project Site or into any adjacent or nearby watercourse, body of water or wetlands on or after the date of the Notice to Proceed by any of the foregoing persons (excluding Indemnitees) only, except to the extent caused by negligence or willful misconduct on the part of the applicable Indemnity.

1.1.5 Owner shall indemnify, defend and hold harmless Contractor, and subcontractors, and their officers, directors, employees and agents, from and against any claims, liabilities, damages, losses and expenses (including reasonably and actually incurred attorneys' fees) resulting from such indemnified party's being deemed an owner or operator of the Project Site, or a generator, storer or treater of Hazardous Materials existing at the Project Site as of the date of the Notice to Proceed, for purposes of any Laws and Permits relating to Hazardous Materials or any investigatory or remedial actions by any government authorities having jurisdiction over the Project or the Project Site; provided, however that this indemnity shall not apply to the extent of the actual negligence or willful misconduct of an indemnified party. Without limitation, such indemnity shall include any liability of the indemnified parties under the Comprehensive Environmental Response Compensation and Liability Act (including the SARA amendments thereto), and any liability of the indemnified parties resulting from actions by any state or local agency.

1.1.6 If any claim of Lien, stop notice, equitable lien or any other demand for payment or security, including claims or demand upon surety bonds for any of the Work, is made or filed with Owner, Owner's property or the Project by any person claiming that Contractor, subcontractor, or any other person claiming under any of them (other than Owner) has failed to perform its contractual obligations or to make payment for any obligation incurred for or in connection with the Work, then Owner shall have the right to retain from any payment then due or thereafter to become due Contractor or to be reimbursed by Contractor an amount sufficient to (i) satisfy, discharge and defend against any such claim or lien, stop notice or other demand, unless Contractor files surety bonds fully releasing the Owner and Owner's property from such claim or lien under applicable law, in which case Owner shall not make any such retention; (ii) remedy any such nonpayment, nonperformance; and (iii) compensate the Owner for and indemnify it against any and all claim, liability, damage, loss, and expense (including reasonably and actually incurred attorneys' and consultants' fees) sustained or incurred in connection therewith.

1.2 Insurance Provided by Contractor

1.2.1 Contractor shall provide, pay for and maintain (and as appropriate, shall require contractors and subcontractors of all tiers to provide, pay for and maintain) insurance of the type and in the limits as set forth below. Contractor shall maintain such insurance from the commencement of Work on the Project Site until Final Acceptance of the entire Project or the completion of all post-acceptance warranty or related work by Contractor or the applicable subcontractor.

1.2.2 Automobile Liability insurance covering all owned, non-owned, and hired

vehicles used by Contractor or the applicable contractor or subcontractor for all operations both on and off the Project Site, with a minimum limit of $2,000,000 combined single limit per accident for Bodily Injury and Property Damage. The policy shall include a waiver of subrogation with respect the Administration. Loading and unloading of any motor vehicle must be covered by endorsement to the automobile liability policy or policies.

Pollution liability coverage at least as broad as that provided under the ISO pollution liability - broadened coverage for covered autos endorsement (CA 99-48) shall be provided, and the Motor Carrier Act endorsement (MCS 90) shall be attached.

1.2.3 Workers' Compensation insurance for statutory benefits limits of the applicable Labor Code(s) and Workers' Compensation law(s) and Coverage B - Employer's Liability with minimum limits of $500,000. each accident for Bodily Injury by accident, $500,000 each employee for Bodily Injury by disease, and $500,000 policy limit for Bodily Injury by disease. Such insurance shall be endorsed to include Longshore and Harbor Workers' Compensation Act Coverage and Jones Act Coverage if applicable, and shall cover all operations of Contractor or the applicable subcontractor <u>except</u> those insured under the OCIP as described in Paragraph 1.3.2. Such insurance shall be endorsed to include Other States Coverage and to include a Waiver of Our Right to Recover from Others Endorsement in favor of the Indemnitees.

(a) If Contractor or the applicable subcontractor is a qualified Workers' Compensation self-insurer, prior to its commencement of Work at the Project Site Contractor shall submit to Owner a copy of such employer's current Certificate of Permission to Self-Insure.

(b) Contractor shall include, and shall require each of its subcontractors to include, the following provision in all subcontracts let by such party for performance of Work when the party performing Work under such subcontract is a qualified, approved self-insurer of Workers' Compensation:

> "The subcontractor waives any right of recovery the subcontractor may have or acquire against the Indemnitees, Contractor or subcontractors of all tiers by reason of the subcontractor's having paid Workers' Compensation benefits as a self-insurer."

1.2.4 Commercial General Liability insurance covering all operations of Contractor or the applicable subcontractor <u>except</u> those insured under the OCIP as described in Paragraph 1.3.2. Such insurance shall be written on an occurrence form; coverage cannot be provided under a "Claims-Made" or "Modified Occurrence" policy without the prior, express written consent of Owner. Such insurance shall be no less comprehensive and no more restrictive than the coverage provided by the standard Insurance Services Office (ISO) form CG 00 01 10 93; shall include by its terms or appropriate endorsements Bodily Injury, Property Damage, Personal Injury, Blanket

Contractual, Independent Contractors, Products and Completed Operations coverages; shall include Products Liability coverage for any products manufactured, assembled, or otherwise worked upon away from the Project Site; and shall include coverage for "x" (explosion), "c" (collapse), or "u" (underground) exposures. Such insurance shall have the following minimum limits:

(a) For the Contractor:

$2,000,000 Each Occurrence;
$2,000,000 General Aggregate; and
$2,000,000 Products/Completed Operations Aggregate

(b) For all subcontractors:

$2,000,000 Each Occurrence;
$2,000,000 General Aggregate; and
$2,000,000 Products/Completed Operations Aggregate

1.2.5. Professional Liability insurance if Contractor or applicable subcontractors will perform or retain others to perform professional services in connection with the Work, including engineering, architectural, medical, testing, environmental assessment or remediation, or design-build services, with a minimum limit of $2,000,000 per wrongful act, error, or omission, and a minimum annual aggregate limit of $4,000,000.

1.2.6. Umbrella Liability: Provide an occurrence "umbrella" form of excess liability insurance containing coverage no more restrictive than that required in the underlying policies specified above. The required primary insurance shall be listed as underlying coverage in the first layer umbrella policy. The umbrella policies shall contain a minimum occurrence and aggregate limit of $5,000,000.

The insurance coverages specified in Paragraphs 1.2.2, 1.2.3, 1.2.4, and may be arranged under single policies for the full limits required or by a combination of underlying policies with the balance provided by Umbrella Liability insurance 1.2.6. The Umbrella Liability insurance shall provide coverage following the form of and as broad as that of the underlying primary policies.

1.2.7 The Indemnitees defined in Article 1.1.1 shall be included as Additional Insureds under the insurance policies in 1.2.2, 1.2.4, and 1.2.6. Coverage afforded the Additional Insureds under these policies shall be primary insurance. If the Additional Insureds have other insurance, which is applicable to the loss, such other insurance shall be on an excess and/or contingent basis.

1.3 Insurance Provided by Owner.

Prior to issuance of the Notice to Proceed under this Agreement, and except as otherwise specified within this Agreement, Owner shall, at its sole expense, secure and

thereafter maintain insurance of the type and in the limits set forth below. To the extent that Contractor or subcontractors, or the property of such persons, are covered by such insurance, (i) Contractor shall comply and shall require its subcontractors to comply with the terms set forth in this Paragraph 1.3 and with the most current version of the OCIP Project Insurance Manual issued and maintained by Owner, and (ii) Contractor shall exclude, and shall require its subcontractors to exclude, cost of maintaining any duplicative insurance coverage in the Cost of Work.

1.3.1 Owner shall purchase and continuously maintain until Final Acceptance or termination of this Agreement, whichever occurs first, Builder's Risk insurance naming as insureds Owner, Contractor, and subcontractors performing construction Work at the Project Site. Such insurance shall cover all equipment, machinery, supplies, and other property intended to be permanently incorporated in the Project, for which title or risk of loss shall have passed at the time of loss to an insured. Coverage shall apply to such property while it is located at the Project

Site or located at temporary off-site storage or staging areas approved by Owner, or while in land-based transit to the Project Site within the continental United States. Coverage shall be written on an "All Risk" form, including but not limited to, fire, lightning, windstorm, hail, riot, riot attending a strike, civil commotion, aircraft, vehicle, smoke, explosion, vandalism, malicious mischief, damage to glass, theft, flood and earthquake (including sinkhole) coverages, subject to normal industry policy provisions. Such insurance shall include coverage for expenses due to delays in completion as a result of the insured perils, subject to a thirty (30) day deductible. Limits under this insurance shall not be less than 100% of the replacement value of the Project for physical damage to property and related expenses, provided that sublimits shall be established for losses due to earthquake (including sinkhole) and for losses due to flood, which earthquake and flood sublimits shall be no less than the minimum sublimits for such losses established pursuant to Owner's agreements with Lenders.

NOTE: The Contractor or its subcontractor shall be responsible to pay a deductible as specified in Exhibit D. This deductible shall not be included under the GMP.

Exclusions from such insurance may include, but are not limited to, the following: (1) loss resulting from mysterious disappearance or caused by any wrongful removal of any property of a named insured or any additional insured by the employee(s) of such named insured or additional insured, (2) loss or damage to any automobiles, (3) loss or damage to contractor's or any insured subcontractor's owned, leased or rented property or construction-type tools, equipment, machinery, or supplies used for construction but not intended to be permanently incorporated in the Project, and (4) loss or damage covered by a manufacturer's warranty or guarantee.

Loss, if any, under this insurance shall be adjusted with Owner, Lenders, and/or Trustees, with the cooperation of Contractor, and insurance proceed check(s) shall be made payable to Owner or its Lenders or Trustees. Amounts shall be disbursed to Contractor, contractors, or subcontractors through the Change Order procedures.

1.3.2 Owner shall maintain the Owner-Controlled Insurance Program (OCIP) insurance specified in Paragraphs 1.3.2(a), (b) and (c) below with Owner, Contractor, contractors and subcontractors of all tiers, and such other persons or interests as the Owner may designate as insured parties, with limits not less than those specified below for each coverage.

OCIP coverage shall not apply to vendors, suppliers, material dealers or other subcontractors who are solely engaged in the stocking, testing, transporting, picking up, delivering or carrying materials, parts, equipment or any other items or persons to or from the Project Site; to contractors or subcontractors who furnish material worked to a special design in accordance with the Drawings and Specifications but perform no operations at the Project Site, unless required by

Owner in writing; or to non-trade employees who are temporarily at the Project Site for meetings, deliveries or similar activities. OCIP coverage for any subcontractor requires a written determination of enrollment of the applicable

subcontractor by Owner; Owner may, in its sole discretion, and at any time prior to or during the performance of Work by an applicable contractor or subcontractor, elect to not enroll or to cease enrollment of any contractor or subcontractor of any tier.

(a) Workers' Compensation insurance for statutory benefits limits of the applicable Labor Code(s) and Workers' Compensation law(s), and Coverage B - Employer's Liability with minimum limits of $2,000,000 each accident for Bodily Injury by accident, $2,000,000 each employee for Bodily Injury by disease, and $2,000,000 policy limit for Bodily Injury by disease. Such insurance shall be endorsed to include Longshore and Harbor Workers' Compensation Act Coverage and Jones Act Coverage if applicable. The policy shall be endorsed to include Other States Coverage, and a Waiver of Our Right to Recover from Others Endorsement in favor of Indemnitees.

Coverage will apply only to Work performed at the Project Site and to off-site activities directly related to Work performed at the Project Site. Coverage <u>will not apply</u> with respect to employees of contractors or subcontractors engaged in hauling activities from or to the Project Site, or to employees of independent truckers/haulers.

(b) Commercial General Liability insurance, written on an occurrence form that shall be no less comprehensive and no more restrictive than the coverage provided by the standard Insurance Services Office (ISO) form CG 00 01 10 93. Such insurance shall include by its terms or appropriate endorsements Bodily Injury, Property Damage, Personal Injury, Blanket Contractual, Independent Contractors, Products and Completed Operations (for a minimum of three years following Substantial Completion), coverage shall include the perils of "x" (explosion), "c" (collapse) and "u" (underground) exposures. This coverage shall have a minimum limit of $2,000,000 each occurrence, $4,000,000 General Aggregate, and $4,000,000 Products/Completed Operations Aggregate.

Coverage will apply only to Work performed at the Project Site. Such insurance will not include coverage for products liability to any insured party, subcontractor, vendor, supplier, material dealer or others for any product(s) manufactured, assembled or otherwise worked upon away from the Project Site.

(c) Umbrella Liability insurance. Insurance coverages following form with the coverage specified in Paragraphs 1.3.2(a) and 1.3.2(b) will be provided. The umbrella program limits are $50,000,000 per occurrence and $50,000,000 annual aggregate.

(d) Railroad Protective Insurance written on an occurrence form CG00351093 for construction work performed on, over, or under a railroad right of way or within fifty (50) feet of railroad property. The coverage limits are $5,000,000 per occurrence and $10,000,00 aggregate.

(e) General Contractors Pollution on Legal Liability Insurance written on an occurrence form. Coverage for third Party BI/PD arising from pollution conditions on MTA's work site covers pollution events and cleanup costs. Coverage limits are $5,000,000 occurrence and $10,000,000 aggregate.

The coverages described in Paragraphs 1.3.2(a), (b) and (c) are set forth in full in their respective policy forms, and the foregoing descriptions of such policies are not intended to be complete, or to alter or amend any provisions of the actual policies. In matters, if any, in which this description may conflict with such policies, the provisions of the policies shall govern.

1.3.3 Owner reserves the right to terminate or modify any coverages identified in Paragraphs 1.3.1 and 1.3.2 on sixty-(60) calendar days' written notice to Contractor, contractors, and subcontractors of all tiers. To the extent that any coverage identified in Paragraphs 1.3.1 and 1.3.2 is so terminated or modified, or if and when Owner determines to not enroll or cease enrollment of a subcontractor in any of such coverages, then Contractor shall obtain or amend, and shall require its affected subcontractors to obtain or amend, its own policies of insurance
as required in Paragraph 1.2 to include coverage for all operations not included or no longer included in the coverage to be furnished under Paragraph 1.3. Owner will reimburse the actual cost of such alternative insurance, which was originally identified in the bid documents of the applicable subcontractor, as a Change Order with the GMP amended accordingly. Written evidence of such alternative insurance shall be provided to the Owner prior to the actual date of the termination or modification of Owner-furnished insurance coverage, or promptly after Owner's determination of non-enrollment of a subcontractor in any such coverage.

1.3.4 Deduction for Owner-Provided Insurance. The following procedures shall apply to OCIP coverage furnished by Owner under Paragraph 1.3.2.

1. Initial OCIP Deduction. In consideration of Owner providing the insurance coverages outlined in Paragraph 1.3, Owner and Contractor mutually agree that the contract price has been reduced by the Initial OCIP Deduction as stated in the relevant bid document. The Initial OCIP Deduction is based on the information provided by Contractor on the *Insurance Cost Worksheet and is subject to the approval of the Owner..*

2. OCIP Insurance Worksheets. Prior to any subcontractor commencing Work on-site, Contractor shall provide to MTA Insurance Cost Worksheets in the form set forth in "Exhibit A" of this Agreement ("Bid Worksheets") completed and signed by each subcontractor.

3. Change Orders. All change orders shall be submitted net of insurance. Each proposed Change Order in excess of $500,000 should identify an OCIP Deduction for the Work described in the proposed Change Order. The proposed Change Order shall identify the estimated man-hours; estimated workers' compensation payroll and estimated OCIP Deduction included within the total Change Order amount.

At Owner's request, Contractor shall complete an *Insurance Cost Worksheet* and submit any other requested information for the Work specified in the Change Order. Owner, at its sole discretion, may amend the Initial OCIP Deduction to include the insurance costs specified in the Change Order and/or the *Insurance Cost Worksheet.*

4. Adjustments to the Initial OCIP Deduction. Owner and/or its representatives shall periodically review the appropriateness of each subcontractor OCIP Deduction. Owner may adjust the OCIP Deduction to reflect the subcontractor's actual insurance cost computed using audited payroll. Owner may withhold from Final Payment in amount adequate to cover the difference between the initial and audited OCIP deductions. If the initial OCIP Deduction is within 10% of the audited OCIP Deduction (as determined by reported and/or audited payroll), no change to the Final Payment will be issued.

1.4 Requirements for All Project Insurance.

Contractor shall cause the insurance to be obtained under Paragraph 1.2, and Owner shall cause the insurance it obtains under Paragraph 1.3, to satisfy the following provisions and requirements.

1.4.1 Owner and Contractor waive all rights against (i) each other and the subcontractors, agents and employees of each other, and (ii) subcontractors, agents and employees, for damages caused by fire or other peril to the extent covered by property insurance obtained by Owner pursuant to this Article 11 or by any other property insurance applicable to the Work, except such rights as each may have to proceeds of such insurance held by Owner as trustee. The insurance policies obtained by Owner pursuant to Paragraph 1.3 shall be endorsed to include a waiver of subrogation in favor of Indemnitees as well as Contractor and subcontractors, and the insurance policies obtained

by Contractor, and subcontractors pursuant to Paragraph 1.2 shall be endorsed to include a waiver of subrogation in favor of Indemnitees; provided, however, that such a waiver of subrogation shall not be required with respect to policies for which all of the Indemnitees are named or additional insureds.

1.4.2 All insurance required by this Agreement shall be from insurance companies authorized to transact that class of insurance in the State of Maryland and having a minimum rating of (or equivalent to) A– VIII by A.M. Best & Company. The required certificates must be personally and manually signed by the authorized representative of the insurance company shown on the certificate with proof that he/she is an authorized representative thereof. In addition, certified, true and exact copies of all insurance policies required by this Agreement shall be provided to either party within a reasonable period of time upon written request.

1.4.3 All of the required insurance shall provide primary coverage with respect to the Work. Any other insurance maintained by Owner, Contractor, or subcontractor shall be in excess of this insurance and shall not contribute to it.

1.4.4 Thirty (30) calendar days' written notice shall be given to Owner and Contractor of any cancellation, intent not to renew, or reduction in the policies' coverage except in the application of the aggregate limit provisions.

1.4.5 Prior to commencing any Work at the Project Site, Contractor, and subcontractors of all tiers shall furnish Owner with a certificate(s) of insurance giving evidence of insurance required by Paragraph 1.2 and evidence of additional insurance endorsements required by Paragraphs 1.2.7 and 1.4.1.

Additionally, Contractor and its subcontractors shall furnish a certificate(s) of insurance or a policy binder(s) of insurance or a policy binder(s), evidencing replacement coverage, to Owner thirty (30) calendar days prior to expiration of any such policies, so that there shall be no interruption in Work due to lack of proof of insurance coverage required by this Agreement. Owner shall not be liable for any delays (or costs or damages resulting therefrom) resulting from Contractor's failure (or that of any subcontractor of any tier) to obtain the insurance required of it under Paragraph 1.2, or to deliver the required certificates of insurance to Owner.

Certificates of insurance shall provide for at least thirty- (30) days' prior written notice to Owner of cancellation (unless cancellation is for nonpayment of premium, in which case 10 days' notice will suffice) or materials alteration, and shall delete the words "endeavor to" from the obligation to notify the certificate holder (Owner) of such cancellation or modification. Upon request of Owner, Contractor shall provide (or require its subcontractors to provide) Owner with a certified copy of any policy of insurance required by Paragraph 1.2.

Vendors, suppliers, material dealers and others who merely transport, pick up, deliver or carry materials, parts or equipment or any other items or persons to or from the Project

Site and those who furnish material worked to a special design but perform no operations at the Project Site shall not be required to furnish a certificate(s) or other evidence of insurance to Owner.

1.4.6 The insurance coverages and limits required under this Agreement are designed to meet the minimum requirements of Owner. They are not designed as a recommended insurance program for Contractor or subcontractors; and meeting these minimum requirements does not relieve such persons of their obligations under Paragraph 11.1.

1.4.7 The amounts and types of insurance shall conform to the minimum requirements set forth in this Appendix I, utilizing Insurance Services Office (ISO) policies and endorsements where applicable.

1.4.8 The acceptance of delivery of any certificates of insurance or certified insurance policies required to be purchased and maintained pursuant to this Agreement does not constitute approval or agreement by the recipient that the insurance requirements have been met or that those certificates of insurance or insurance policies are in compliance with this Agreement.

1.4.9 All of the insurance required by this Article 11 shall be issued as required by law and shall be endorsed, where necessary, to comply with the minimum requirements contained herein. Certified copies of renewal policies or binders must be provided thirty (30) calendar days prior to expiration of current policies so that there shall be no interruption in Work due to lack of proof of insurance coverage as required in this Agreement.

1.4.10 Owner may elect at any time during the term of this Agreement to require Contractor to procure and maintain other or additional insurance. Notice of such election shall be given at least sixty (60) days prior to the effective date of the required modifications. Owner shall reimburse any additional costs incurred by these parties in securing insurance as a part of the Cost of the Work, and the GMP shall be revised by Change Order to be increased by the amount of such additional reimbursement.

EXHIBIT C

FORMS TO BE COMPLETED BY SUCCESSFUL BIDDER ONLY

Enrollment Application
Notice of Subcontractor Award
Notice of Work Completion
Monthly Payroll Report

Error! Objects cannot be created from editing field codes. Form-3	**ENROLLMENT APPLICATION** Numbers reference attached instructions	MTA - OCIP Page 1 of 2

Examine your current Workers' Compensation and General Liability Policies or contact your Insurance Agent to assist you with completing this form. *** **NOTICE** *** **Enrollment** is not automatic and requires the satisfactory completion of the Aon Form-1a or Form-1b, Form-2 and Form-3. In addition, submit a Certificate of Insurance providing evidence of your *off-site* coverage. Please refer to the Insurance Manual for coverage requirements. Use of this form is mandatory. Duplicate as required.

A. Subcontractor Information:

Federal ID No.: 1

	▼ Business Information *(headquarters)*	▼ Contact Information (address questions to.)
Company Name & dba:	2	3
Contact Name & Title:		
Address:		
Washington, DC Zip Code:		
Telephone:		
Fax:		
Email Address:		

Indicate your Organization's Structure: 4 ☐ Corporation ☐ Partnership ☐ S-Corporation ☐ Joint Venture ☐ Sole Proprietor ☐ Other _____

B. Subcontract Information:

Subcontract No.: 1

Description of Work: 2

Subcontract Amount $: 3

Amount of Self Performed Work $: 4

5 Are you a: ☐ Subcontractor ☐ Subcontractor *(any tier)*

If Subcontractor (*any tier*), identify under contract with: 6

Start Date: 7 ☐ Actual ☐ Estimated

Completion Date: 8 ☐ Actual ☐ Estimated

C. Workers' Compensation Insurance Information for Work Described Above: *(attach a separate sheet if necessary)*

a State	b Class Code	c Description	e Man-hours	f Payroll
1				
		Totals	2	3

D. Provide your current Workers' Compensation Information:

Anniversary Rating Date:	Experience Modification:	Bureau File Number:
1	2	3

Your WC Insurance Carrier: 4

Policy #: 5 Effective Date: 6 Expiration Date: 7

E. Contacts: *(Complete if Applicable)*

Position	1 Name & Title	2 Phone	3 Fax	4 email address
Project				
Safety Rep:				
Contract				
Claims:				
Payroll:				

Provide Location of payroll records if different than Corporate address: 5

Address: _____ Contact: _____

Washington, DC Zip Code: _____ Phone: _____

Error! Objects cannot be created from editing field codes. Form-3	**ENROLLMENT APPLICATION** Numbers reference attached instructions	MTA - OCIP Page 2 of 2

F. Subcontract Information: List **all** subcontractors that will be working for you on this project (complete the information in the following table). Use additional paper if necessary:

1 Subcontractor	2 Subcontract Amount	3 Contact Person	4 Address & Email Address	5 Phone & Fax Number

G. Enrollment Questions: Answer each question. Use additional paper if necessary.

1 Will you have any off-site location(s) 100% dedicated to this project? ☐ Yes ☐ No If yes, please provide address:

_____

_____

2 Please check if: ☐ Any aircraft used on this project ☐ Any watercraft used on this project

3 Please indicate if labor from the following sources will be used: ☐ Employee Leasing Firm ☐ Temporary Labor Agency

H. WARRANTY APPLICABLE TO PROGRAM INSURANCE COVERAGE

1 Premiums for this Program are the responsibility of *Maryland Transit Administration* and I agree any and all return of premium, dividends, discounts, or other adjustments to any Program policy(ies) is assigned, transferred and set over absolutely to *Maryland Transit Administration*. This assignment applies to the Program policy(ies) as now written or as subsequently modified, rewritten or replaced. Rights of Cancellation for all Program insurance policy(ies) arranged by *Maryland Transit Administration* are assigned to *Maryland Transit Administration*.

2 I will pay the cost of premium(s) for non-Program insurance coverage, specified in the Subcontract Documents.

3 I authorized the release of all claim information for all insurance policies under this Program.

4 It is my responsibility to notify my insurance carrier(s) that I am enrolling in this Program.

5 I have omitted from my bid the insurance costs for the coverage provided by *Maryland Transit Administration*.

6 The statements in this insurance application are true to the best of my knowledge.

I. Signature Block :

I **verify** the information presented above and attachments are correct:

Name: _____ (please print) Date: _____

Title: _____ Signature: _____

Mail or Fax to: **Ed McDuffie**
Aon Risk Services, Inc. of DC
1120 20th Street NW, Suite 600
Washington, DC 20036-3406

Fax # **(202) 429-8530**
Phone # **(202) 429-8513**

Or Email: ed_mcduffie@ars.aon.com

Error! Objects cannot be created from editing field codes. **Form-3**	**ENROLLMENT APPLICATION** **INSTRUCTION**	**MTA - OCIP** Page 1 of 1

This form must be completed and submitted by each successful Subcontractor and Subcontractor of any tier prior to Site mobilization for each contract awarded. The Subcontractor will submit the completed form to Aon Risk Services. Upon receipt of this form, Aon will issue, to the Subcontractor, a Certificate of Insurance evidencing coverage in the Controlled Insurance Program. The completed Certificate of Insurance and workers compensation insurance policy will be mailed to the Enrolled party.

A. Subcontractor Information

1 Enter your company's Federal ID number. This number can be found on filings made to the federal government such as your tax return.
2 Enter your company's name, mailing address and phone/fax number for your company's headquarters in the space provided below.
3 Enter the name of the person Aon should contact if questions arise. Include mailing address, phone/fax and email address in the space provided below.
4 Identify your company's legal structure by checking the box that applies. If the correct legal structure is not specifically listed, please check the "Other" box and specify in the space provided.

B. Subcontractor Information

1 Enter the Subcontractor Number that was included in Maryland Transit Administration's originating documentation.
2 Provide a brief description of the work you will be performing at the Constitution Center site.
3 Identify the total amount of your Subcontract.
4 Identify the percentage of work that you anticipate will be self-performed.
5 Check the appropriate box that identifies if you contract directly with Maryland Transit Administration or are a Subcontractor.
6 If you are a lower tier Subcontractor, identify the entity you are under Subcontract with.
7 Enter the Date you anticipate starting work and then mark whether the date provided is actual or estimated
8 Enter the Date you anticipate completing the described work and then mark whether the date provided is actual or estimated.

C. Workers' Compensation Insurance Information *(Duplicate or attach additional sheets if necessary.):*

1 A Enter the 2 digit abbreviation for the state in which the work will be performed.
B Enter the 4 digit workers compensation class code that applies to the work identified in B2.
C Enter the workers compensation class code description that applies to the work identified in C1c.
D Enter the Workers' Compensation rate that applies to the class code.
E Enter the estimated Man-hours required to complete the described work for each Worker's Compensation class code.
G Enter the estimated Payroll required to complete the described work for each Worker's Compensation class code. Use only unburdened payroll and exclude the premium portions of any over-time pay.
2 Total all estimated Man-hours for each class code. Be sure to include information from additional pages if used.
3 Total all estimated Payroll for each class code. Be sure to include information from additional pages if used.

D. Current Worker's Compensation Information *(This information relates to your corporate or existing coverage)*

1 Provide your Company's Anniversary Rating Date. Information can be located on your bureau's WC Experience Modification worksheets.
2 Enter your current WC Experience Modification Factor.
3 Enter your Bureau File Number also referred to as your Risk Identification Number. This number can also be found on your Modificati0n worksheets.
4 Identify your insurance carrier for Workers' Compensation Coverage.
5 Provide your Worker's Compensation Policy Number.
6 Provide the effective date of your Worker's Compensation policy.
7 Provide the expiration date of your Worker's Compensation policy.

E. Contacts *(Requested Contact information is for specific functions. It is possible to have a single person fulfill multiple responsibilities)*

1 Identify the name of the person and their title for each function. These individuals should be located, if at all possible, on-site.
2 Provide the phone number for each person identified above.
3 Provide the fax number for each person identified above.
4 Provide the email address for each person identified above, if applicable.
5 Identify the physical location of where your payroll records are retained. Provide the Address, City, State, Zip Code, Telephone, Fax Number and Email Address of the person responsible for maintaining the payroll information.

F. Subcontractor Information *(Provide the following information for each lower tier Subcontractor that will be performing work at the Constitution Center site.)*

1 Identify the name of the Subcontracting firm
2 Provide the estimated value of the subcontracted activity.
3 Provide a contact name, preferably the project manager, for the subcontractor.
4 Provide the mailing address for the Subcontractor.
5 Provide the phone number for the Subcontractor.

G. Enrollment Questions

1 Determine if you will have any locations, off-site, that will be 100% dedicated to this project. Mark the appropriate box (yes/no). If you answer yes – provide the address of each location you identified as 100% dedicated.
2 Mark the box or boxes that apply. Contemplate only work performed under this contract.
3 Mark the box or boxes that apply. Employee Leasing Firms are those firms that supply the entire labor force for your company.

H. Warranty Statements:

1-6 Read each Warranty statement thoroughly. If you have questions regarding any of these statements, contact Aon.

I. Signature Block: This form must be signed by a representative of your company knowledgeable of its accuracy.

Forward the completed Enrollment Application to the Aon administrator identified at the bottom of page of the form. This form must be received by the administrator prior to the start of your work.

NOTICE OF SUBCONTRACTOR AWARD

This form is to be completed every time you enter into a subcontract and submitted to Aon Risk Services, Inc. of MD at the address shown

Aon Risk Services, Inc. of MD
Attn: Chuck Burn
500 E. Pratt Street, 7th Floor
Baltimore, MD 21202

Phone: 410.547.2882
Fax: 847.953.0919

PROJECT NAME

BID PACKAGE NAME: _____

BID PACKAGE NUMBER: _____

AWARDING CONTRACTOR: _____

We have awarded a subcontract as follows:

Type of Work: _____

AWARDED TO: _____

Address: _____

City, State, Zip: _____

Federal ID#: _____

Insurance Contact: _____

Telephone Number: _____

Fax Number: _____

E-Mail Address: _____

Date of Subcontract: _____

Estimated Contract Amount: _____

Probable Starting Date: _____

Probable Completion Date: _____

_____

Authorized Signature Title Date

This form must be submitted each time a new subcontract is awarded. This includes subcontractors who are working on existing projects and are already enrolled in the OCIP program.

Error! Objects cannot be created from editing field codes. **Form-4**	**On-Site Payroll Report - Form 4** Numbers reference attached instructions	**MTA OCIP** **Page 1 of 2**

Complete a Separate Form for Each Subcontract with Maryland Transit Administration. Your report is due not later than the 10th day of each month. Delay in providing this report may result in payments being withheld.

A. REPORT IDENTIFICATION

Period Beginning: 1 _____ **Period Ending:** 2 _____ **Year:** 3 _____

Subcontractor: 4 _____

Under Contract with: 5 _____

Contract #: 6 _____

B. ACTIVITY REPORT

a State	b workers' compensation Class Code	c Work Description	d Man-Hours	e Gross Payroll	f Reportable Payroll *
1					
		TOTALS:	2	3	4

* Do not include premium (excess) overtime wages, use straight time wage rates only. You must also comply with all rules set forth by the Workers Compensation Bureau in the state in which the work is performed.

C. ADDITIONAL DATA REQUIREMENTS :

1. _____
2. _____
3. _____

D. Signature Block : I verify the information presented above and attachments are correct:

Name: _____ **Date:** _____
(please print)

Title: _____ **Signature:** _____

☐ CHECK IF THIS IS YOUR LAST PAYROLL REPORT. COMPLETE AN AON FORM-5 "NOTICE OF WORK COMPLETION" AND INCLUDE WITH THIS PAYROLL REPORT.

Note: Information can be submitted on-line at www.aonwrap.aon.com. Please contact your Administration Staff to obtain a user ID and Password.

Mail or Fax to: **Ed McDuffie**
Aon Risk Services, Inc. of DC
1120 20th Street NW, Suite 600
Washington, DC 20036-3406
Or Email: ed_mcduffie@ars.aon.com

Fax # **(202) 429-8530**
Phone # **(202) 429-8513**

Error! Objects cannot be created from editing field codes. **Form-4**	**On-Site Payroll Report - Form 4** **INSTRUCTIONS**	**MTA OCIP** **Page 2 of 2**

The Subcontractor and every Subcontractor of any tier performing work at the Project Site for each Subcontract awarded must complete this form each month. The Subcontractor must attach the completed report to their monthly pay request in order to receive interim payment. Subcontractors will be responsible for the submission of this form by their lower tier Subcontractors. Aon Risk Services can forward a supply of these forms to your company upon request.

A. Report Identification

1 Fill in the month and day for the beginning of the period you are reporting on.
2 Fill in the month and day for the ending of the period you are reporting on.
3 Fill in the year that applies to the reporting period.
4 Enter the name of your firm.
5 If you are a lower tier Subcontractor, identify the name of the firm you are contracted with. If you are a Subcontractor enter N/A
6 Provide your Subcontract Number

B. Activity Report

1 For each workers' compensation Class Code that applies to work performed during the reporting period, provide the following information:
- a Identify the state in which the work was performed.
- b Identify the workers' compensation Class Code that applies to the work performed during the period. (Most states use a four digit No.)
- c Provide a brief description of the work by class code.
- d Identify the number of Man-hours worked by your employees for each applicable class code.
- e Provide the Gross Payroll paid to your employees. This should include overtime pay and vacation pay.
- f Determine the Reportable Payroll. Reportable Payroll does not include the premium portion of any overtime pay (i.e. 45 hours X $10.00/hr = 450.00 *do not include the premium overtime pay of $5.00 for the 5 hours of overtime*)

2 Total the Man-hours provided on the payroll report.
3 Total the Gross Payroll provided.
4 Total the Reportable Payroll.

C. Additional Data Requirements: If questions are listed in this section of the form, they are unique to this project. Please refer to the Insurance Manual.

D. Signature Block: This form must be signed by a representative of your company with the authority to Verify the information is correct.

Note: Information can be submitted on-line at www.aonwrap.aon.com. Please contact your Administration Staff to obtain a user ID and Password.

Error! Objects cannot be created from editing field codes. Form-5	NOTICE OF WORK COMPLETION Numbers reference attached instructions	MTA OCIP Page 1 of 1

1 Contractor Name: _____

2 Contract #: _____

3 Description of Work Performed: _____

4 Date Work Completed: _____

5 Date this Subcontract Completed: _____

The following lower tier Subcontractors have completed their Work at the Project site: *(Add attachment if more space is needed)*

a Subcontractor's Name	b Contract Number	c Description of Work	d Date Completed
6			

Location of your payroll records *(Receipt of this form will initiate the payroll audit process)*:

Address: 7 _____

State, City Zip Code: _____

Contact/Phone #: _____

The undersigned acknowledges request for termination of coverage under the OCIP as of the date indicated above for the specified Contract. Should we return to the work Site, we will be working under our own insurance program and must provide MTA with a Certificate of Insurance showing our own coverage as detailed in our contract.

Signed by: 8 _____

Title Date

Approved by: 9 _____

DAVIS Project Manager Date

Mail or Fax to: Ed McDuffie
Aon Risk Services, Inc. of DC
1120 20th Street NW, Suite 600

Fax # (202) 429-8530
Phone # (202) 429-8513

Washington, DC 20036-3406
Or Email: ed_mcduffie@ars.aon.com

Error! Objects cannot be created from editing field codes. Form-5	NOTICE OF WORK COMPLETION INSTRUCTION	MTA OCIP Page 1 of 1

- This form will be completed and returned to the OCIP Administrator by the Contractor whenever work is completed for each Subcontract. This form will initiate the final payroll audit process for the Contractor identified in item 1. Final Payments and Release of Retainage will not occur until all payroll work is complete and finalized.

1 - Provide the name of the Contractor completing their work.
2 - Enter the Subcontract number for the work being completed.
3 - Provide a brief description of the work being completed.
4 - Provide the Date the Work was completed.
5 - Provide the Date the Subcontract was completed, if other than the work completion date.
6a - Enter the name of each Subcontractor that performed work for you that has completed their work.
b - Enter their Subcontract Number.
c - Provide a brief description of their work.
d - Provide the Date they completed their work.
7 - Identify the physical location of where your payroll records are retained. Provide the Address, State, City, Zip Code, Contact Name and Telephone Number of the person responsible for maintaining the payroll information.
8 - This form must be signed by a representative of your company with the authority to Verify the information is correct.
9 - Have this form approved by the Project Manager for the Project site.

EXHIBIT D

SCHEDULE OF DEDUCTIBLES

CATEGORY	CLASSIFICATION	DEDUCTIBLE
Buildings	Fire Resistive/Non-Combustible 2 stories or less 3 Greater than 3 stories	 $10,000 $10,000
	Joisted Masonry	$10,000
	Renovations - Non Structural - Structural	$10,000 $10,000
	Frame - New or Renovation	Refer
Bridges	Over Land Except	$10,000
	Truss / Arch / Box Girder	$25,000
	Over Water Except	$25,000
	Truss / Arch / Box Girder	$25,000
	Suspension, Cable Stayed & Movable Spans	Refer
Tunnels	Cut & Cover	$25,000
	Hard Rock	$100,000
	Soft Bore	$250,000
Stations (Non-Building Work)	At Grade	$10,000
	Elevated	$10,000
	Below Grade	$10,000
Infrastructure	Railwork / Roadbed / Crossings / Signalization / Electrification / Paving / Utility Relocations & Miscellaneous Work	$10,000
Flood	Within 100-Year Flood Plain	$250,000
	All other Flood	$25,000 or Per Classification (Which-ever is higher)
Earthquake	All Earthquake	$25,000 or Per Classification (Which-ever is higher)
Delay in Completion	Bridges & Tunnels	1 - Day for Each Month of Construction Term (Minimum 15 Days)
	All other Categories	10 - Days
Rolling Stock Overhaul	Passenger Cars	$10,000
	Passenger Cars in Transit / Rail Testing	$100,000

SECTION 16116

UNDERGROUND CONDUITS

PART 1 - GENERAL

1.01 DESCRIPTION:

A. This Work includes providing conduits as shown on the Drawings and as specified herein. Each conduit consists of ducts, fittings, and concrete. Conduit construction includes excavation, installation and backfill.

B. Ducts emerging from conduits and direct-buried shall comply with the requirements of Section 16111.

C. Underground conduits include the following as shown on the Contract Drawings:

1. 3" schedule 80 concrete encased conduit
2. 4-4" schedule 80 concrete encased conduit
3. 10-4" schedule 80 concrete encased conduit
4. Schedule 80 direct buried conduit
5. Standby Power Conduit No 1
6. Standby Power Conduit No 2
7. Standby Power Conduit No 3
8. Standby Power Conduit No 4
9. 4-5" Fiberglass Conduits

1.02 RELATED SECTIONS:

A. Section 01300 – Submittals

B. Section 01450 – Quality Assurance and Quality Control

C. Section 02315 – Excavation and Backfill

D. Section 03210 – Concrete Reinforcement

E. Section 03300 – Cast-in-Place Concrete

F. Section 16010 – General Electrical Requirements

G. Section 16111 – Ducts and Raceways

1.03 SUBMITTALS:

A. Submittals shall be made in accordance with the requirements of Section 01300.

1.04 QUALITY ASSURANCE/QUALITY CONTROL:

A. Quality Assurance/Quality Control shall be carried out in accordance with the requirements of Section 01450.

1.05 AS-BUILT DRAWINGS:

A. As-built drawings shall be provided in accordance with the requirements of Section 01300, except as modified herein.

B. As-built drawings shall show the location of all underground conduits and the number and size of ducts therein.

C. Section drawings shall show the configuration of ducts in the conduit throughout its length.

D. Tabulations shall show the number of spare ducts available at the time of project completion.

PART 2 - PRODUCTS

2.01 DUCTS:

A. Ducts, fittings, and labels shall comply with Section 16111.

B. Duct spacers shall be plastic, lock together, and sized to create clear spaces between ducts as indicated on the contract drawings. Acceptable manufacturers: Carlon, PW Pipe, or equal.

2.02 WARNING TAPE:

A. Tape shall be heavy-gauge, yellow, plastic, for direct burial, 6-inch minimum width for use in trenches containing electric circuits. Tape shall be made of material resistant to corrosive soil. Tape shall have printed warning that an electric circuit is located below the tape. Approved manufacturers and types: ITT Blackburn Type YT, Griffolyn Co., Terra-Tape, or equal.

2.03 ENCASEMENT:

A. Concrete encasement shall be in accordance with Section 03300 and Section 03210, except concrete shall have a 2,500 psi minimum, 28-day strength. Slump shall be 7-inch with a 1-inch tolerance. All concrete encasement, which is above grade, shall have a 4,000 psi minimum 28-day strength. All buried concrete encasement, which crosses track(s), shall have a 4,000 psi minimum 28-day strength, on a length of 15-feet on each side of the crossing.

2.04 RED CONCRETE:

A. Red-colored concrete shall be made by mixing-in iron oxide in a ratio of 100 pounds per 8 cubic yards of concrete.

B. Red-colored concrete shall be used to encase all high voltage and electric traction (ET) conduits underground.

2.05 FIBERGLASS CONDUIT:

A. Fiberglass Conduit:

1. Reinforced epoxy (FRE) conduit shall be composed of glass filaments encapsulated in an epoxy matrix. Each conduit length shall have an integral wound-in expanded coupling. Sizes 2-inches through 6-inches shall incorporate an integral urethane gasket for sealing. No threads or adhesives shall be required to assembly the joints for inground installations. Watertight joints shall be assembled as specified herein under Part 3 "Installation" of Section 16300 of these specifications. All conduit and fittings shall be pigmented with carbon black dispersed homogeneously throughout the epoxy glass matrix for U.V. protection.

2. Conduit and fittings shall be filament wound.

3. Conduit shall be suitable for continuous operation from -40 degrees C to + 110 degrees C without significant change of mechanical properties.

4. Conduit combustion by-products shall not contain chlorine gas in excess of trace levels and always less than safe OSHA limits.

5. Conductors shall not adhere to conduit or fitting in fault conditions.

6. Conduit and fittings in the 2-inches through 6-inches sizes inclusive shall have inside diameters equal to the trade size.

7. Conduit and fittings shall bear nationally accepted testing laboratory approval from U.L.

8. Conduit and fitting shall be suitable for use in direct burial, concrete encasement and underwater when joints are properly treated. When waterproofed, the conduit and joints shall not fail when subjected to water pressures at depths of one hundred feet.

9. Contractor shall submit certifications of compliance to these specifications and a sample of the conduit to be installed.

B. Acceptable Manufacturers:

1. FRE Conduit Inc.

2. Fiberglass Pipe and Conduit Company (FIPCO).

3. Cila-Geigy Corporation.

4. Or Equal.

PART 3 - EXECUTION

3.01 GENERAL:

A. Where required to support trench, construct formwork in accordance with Section 03300.

B. Coordinate installation of underground conduits with other construction work. Maintain any existing utilities in operation unless otherwise directed by the Project Manager.

C. Concrete encasement shall be limited to the neat lines shown on the Contract Drawings. The Contractor shall be responsible for coordinating placement of the concrete with other work. If the conduit conflicts with other work it shall be relocated by Contractor.

D. Protect and maintain all new or existing benchmarks or other reference points necessary for the completion of the work.

E. Red-colored concrete shall be used for all high voltage conduits buried underground.

F. All ducts shall have a nylon pull-cord installed and secured at each end. Identify each duct at each end with brass tags inscribed or stamped with

the circuit number shown on the Drawings. Attach the tag with a sunlight resistant nylon tie.

3.02 TRENCH EXCAVATION AND BACKFILL:

A. Follow the requirements of Section 02315 except blasting will not be permitted. Provide a minimum cover of 36 inches over all underground ductbank unless otherwise indicated.

B. When trench walls are stable, use the walls of the trench as forms for concrete encasement. The trench shall be made no wider than necessary to provide the nominal concrete encased ductbank.

C. Excavations shall be dewatered in accordance with Section 02315 and the excavation cleaned prior to duct and concrete placement.

D. Provide a compacted base per Section 02315 under the conduit.

E. Install yellow warning tape 6 to 12 inches above conduit.

3.03 DUCT PLACEMENT:

A. Raceways shall be arranged as shown on the Contract Drawings.

B. Slope all ducts for drainage to manholes or handholes away from buildings. Minimum slope is 1 inch per 100 feet.

C. Duct spacers shall be placed at maximum five-foot intervals (unless longer intervals are allowed by code).

D. Bending radii indicated on Drawings and specified herein are to be considered minimum, unless noted otherwise.

E. Secure ducts to prevent displacement during concrete encasement or earth backfilling. Make minor changes in location or cross-section as necessary to avoid obstructions or conflicts. Where duct runs cannot be installed as shown because of conditions not discoverable prior to trenching, refer the condition to the Designer for direction before further work is done.

F. When placing concrete around the ducts, adjust the delivery chute so the fall distance of the concrete into the trench is minimal. Concrete direct fall distance shall be 3 feet or less. Do not move concrete more than 5 feet horizontally from point of discharge. Use a splash board to divert the flow of concrete away from the trench sides and avoid dislodging soil and stones. Concrete shall be incorporated in accordance with Section 03300.

G. All plastic ducts may expand or contract as concrete is placed and cured. Therefore, when placing concrete encasement, always encase from one

end of the duct section toward the other end to allow the free end to move. Never encase from each end of the section toward the center.

H. Place concrete continuously between manholes, handholes and pullboxes. If the placement stops for more than 2 hours, 8 foot lengths of No. 4 reinforcement steel shall be placed longitudinally around the perimeter of the concrete envelope on 12-inch centers and with 2 inches minimum cover. Half of each 8 foot length shall be in each pour.

I. Mandrel ducts and provide seals in accordance with Section 16111. Ducts shall be mandrelled after concrete encasement but before backfilling.

3.04 INSPECTION:

A. The Contractor's QC Inspector in accordance with the Contractor's QC procedures shall inspect conduits.

PART 4 - MEASUREMENT AND PAYMENT

4.01 3" SCHEDULE 80 CONCRETE ENCASED CONDUIT-TRENCHED:

A. 3" schedule 80 Concrete Encased Conduit-Trenched will be measured per linear foot.

B. 3" Schedule 80 Concrete Encased Conduit-Trenched will be paid for at the Contract unit price bid. This price shall be full compensation for all materials, including concrete encasement, labor, equipment, and all work incidentals necessary to complete the item as specified.

4.02 4-4" SCHEDULE 80 CONCRETE ENCASED CONDUIT-TRENCHED:

A. 4-4" Schedule 80 Concrete Encased Conduit-Trenched will be measured per linear foot.

B. 4-4" Schedule 80 Concrete Encased Conduit-Trenched will be paid for at the Contract unit price bid. This price shall be full compensation for all materials, including concrete encasement, labor, equipment, and all work incidentals necessary to complete the item as specified.

4.03 STANDBY POWER NO 1 CONCRETE ENCASED CONDUIT-TRENCHED:

A. Standby Power No 1 Concrete Encased Conduit-Trenched will be measured per linear foot.

B. Standby Power No 1 Concrete Encased Conduit-Trenched will be paid for at the Contract unit price bid. This price shall be full compensation for all

materials, including concrete encasement, labor, equipment, and all work incidentals necessary to complete the item as specified.

4.04 STANDBY POWER NO 2 CONCRETE ENCASED CONDUIT-TRENCHED:

A. Standby Power No 2 Concrete Encased Conduit-Trenched will be measured per linear foot.

B. Standby Power No 2 Concrete Encased Conduit-Trenched will be paid for at the Contract unit price bid. This price shall be full compensation for all materials, including concrete encasement, labor, equipment, and all work incidentals necessary to complete the item as specified.

4.05 STANDBY POWER NO 3 CONCRETE ENCASED CONDUIT-TRENCHED:

A. Standby Power No 3 Concrete Encased Conduit-Trenched will be measured per linear foot.

B. Standby Power No 3 Concrete Encased Conduit-Trenched will be paid for at the Contract unit price bid. This price shall be full compensation for all materials, including concrete encasement, labor, equipment, and all work incidentals necessary to complete the item as specified.

4.06 STANDBY POWER NO 4 CONCRETE ENCASED CONDUIT-TRENCHED:

A. Standby Power No 4 Concrete Encased Conduit-Trenched will be measured per linear foot.

B. Standby Power No 4 Concrete Encased Conduit-Trenched will be paid for at the Contract unit price bid. This price shall be full compensation for all materials, including concrete encasement, labor, equipment, and all work incidentals necessary to complete the item as specified.

4.07 CONDUIT PVC 80 1" DIA.:

A. Conduit PVC 80 1" Dia. will be measured per linear foot.

B. Conduit PVC 80 1" Dia. will be paid for at the Contract unit price bid. This price shall be full compensation for all materials, labor, equipment, and all work incidentals necessary to complete the item as specified.

4.08 CONDUIT PVC 80 2" DIA.:

A. Conduit PVC 80 2" Dia. will be measured per linear foot.

B. Conduit PVC 80 2" Dia. will be paid for at the Contract unit price bid. This price shall be full compensation for all materials, labor, equipment, and all work incidentals necessary to complete the item as specified.

4.09 CONDUIT PVC 80 4" DIA.:

A. Conduit PVC 80 4" Dia. will be measured per linear foot.

B. Conduit PVC 80 4" Dia. will be paid for at the Contract unit price bid. This price shall be full compensation for all materials, labor, equipment, and all work incidentals necessary to complete the item as specified.

4.10 4-5" FIBERGLASS CONCRETE ENCASED CONDUIT-TRENCHED.:

A. 4-5" Fiberglass Concrete Encased Conduit-Trenched. will be measured per linear foot.

B. 4-5" Fiberglass Concrete Encased Conduit-Trenched. will be paid for at the Contract unit price bid. This price shall be full compensation for all materials, labor, equipment, and all work incidentals necessary to complete the item as specified.

4.11 2-5" SCHEDULE 40 PVC CONCRETE ENCASED CONDUIT-TRENCHED.:

A. 2-5" Schedule 40 PVC Concrete Encased Conduit-Trenched will be measured per linear foot.

B. 2-5" Schedule 40 PVC Concrete Encased Conduit-Trenched. will be paid for at the Contract unit price bid. This price shall be full compensation for all materials, labor, equipment, and all work incidentals necessary to complete the item as specified.

4.12 4-5" SCHEDULE 40 PVC CONCRETE ENCASED CONDUIT-TRENCHED.:

A. 4-5"" Schedule 40 PVC Concrete Encased Conduit-Trenched will be measured per linear foot.

B. 4-5"" Schedule 40 PVC Concrete Encased Conduit-Trenched. will be paid for at the Contract unit price bid. This price shall be full compensation for all materials, labor, equipment, and all work incidentals necessary to complete the item as specified.

4.13 CONDUIT PVC 80 3" DIA.:

A. Conduit PVC 80 3" Dia. will be measured per linear foot.

B. Conduit PVC 80 3" Dia. will be paid for at the Contract unit price bid. This price shall be full compensation for all materials, labor, equipment, and all work incidentals necessary to complete the item as specified.

END OF SECTION

SECTION 16120

SWITCH HEATERS AND STANDBY POWER CABLES

PART 1: GENERAL

1.01 DESCRIPTION:

A. This Section includes Switch Heater and Standby Power wires and cables and associated connectors, splices, and terminations for wiring systems.

1.02 RELATED DOCUMENTS:

A. Drawings and general provisions of the Contract, including General and Supplementary Conditions and Division 1 Specification Sections, apply to this Section.

B. Section 16020 – Basic Electrical Materials and Methods

C. Section 16122 – Low Voltage Wire, Cable for Pit Area and Panels

D. Section 16280 – Standby Auxiliary Power Control cabinet

E. Section 16600 – Switch Track Snowmelter

F. Section 17215 – Grid Layouts and Grounding Systems

1.03 SUBMITTALS:

A. Comply with the provisions of Section 01300.

B. Field Test Reports: Indicate and interpret test results for compliance with performance requirements.

C. Wire and cable installation procedures.

1.04 QUALITY ASSURANCE:

A. Listing and Labeling: Provide wires and cables specified in this Section that are listed and labeled.

1. The Terms "Listed" and "Labeled": As defined in NFPA 70, Article 100.

2. Listing and Labeling Agency Qualifications: A "Nationally Recognized Testing Laboratory" as defined in OSHA Regulation 1910.7.

B. Comply with NFPA 70.

1.05 DELIVERY, STORAGE, AND HANDLING:

A. Deliver wires and cables according to NEMA WC 26.

1.06 COORDINATION:

A. Coordinate layout and installation of cables with other installations.

B. Revise locations and elevations from those indicated, as required to suit field conditions and as approved by Engineer.

PART 2: PRODUCTS

2.01 SNOW MELTER WIRES AND CABLES :

A. Power Cables

1. Single Conductor #4, 2000 Volt Cable:

2. Refer to specification in Section 16600, 2.03.

3. Available Manufacturers: Subject to compliance with requirements, manufacturers offering products that may be incorporated into the Work include, but are not limited to, the following:

   a. American Insulated Wire Corp.; Leviton Manufacturing Co.

   b. BICC Brand-Rex Company.

   c. Carol Cable Co., Inc.

   d. Okonite

   e. Connectors for Wires and Cables:

   f. General Signal; O-Z/Gedney Unit.

   g. Square D Co.; Anderson.

   h. 3M Company; Electrical Products Division.

B. Control Cable:

1. Control cable shall be #14 AWG and insulated for 600 VAC. Refer to specifications in Section 16122, 2.02 for details.

2.02 STANDBY AUXILIARY POWER WIRES AND CABLES:

A. Cables from the 480 VAC Substation shall be 500 kcmil, 600 VAC and 1/0 as specified in Section 16280.

B. Control cables shall be #14 AWG minimum and insulated for 600 VAC. Refer to specifications in Section 16280.

C. Grounding cables shall be #4/0 as specified in Section 17215.

D. The Plug-in cables from each Standby Power Cabinet to rail cars or locomotives shall be supplied by MTA

2.03 CONNECTORS AND SPLICES:

A. UL-listed, factory-fabricated wiring connectors of size, ampacity rating, material, type, and class for application and service indicated. Comply with Project's installation requirements and as specified in Part 3 "Wire and Insulation Applications" Article.

PART 3: EXECUTION

3.01 EXAMINATION:

A. Examine raceways and underground ducts to receive wires and cables for compliance with requirements for installation tolerances and other conditions affecting performance of wires and cables. Do not proceed with installation until unsatisfactory conditions have been corrected.

3.02 INSTALLATION:

A. Install wires and cables as indicated, according to manufacturer's written instructions and NECA's "Standard of Installation."

B. Pull Conductors: Use manufacturer-approved pulling compound or lubricant where necessary; compound used must not deteriorate conductor or insulation. Do not exceed manufacturer's recommended maximum pulling tensions and sidewall pressure values.

C. Use pulling means including fish tape, cable, rope, and basket-weave wire/cable grips that will not damage cables or raceway.

D. Support cables according to Section 16020 - Basic Electrical Materials and Methods.

E. Identify wires and cables according to Section 16020 - Basic Electrical Materials and Methods.

3.03 CONNECTIONS:

A. Conductor Splices: Keep to minimum.

B. Install splices and tapes that possess equivalent or better mechanical strength and insulation ratings than conductors being spliced.

C. Use splice and tap connectors compatible with conductor material.

D. Tighten electrical connectors and terminals according to manufacturer's published torque-tightening values. If manufacturer's torque values are not indicated, use those specified in UL 486A and UL 486B.

3.04 FIELD QUALITY CONTROL:

A. Testing: On installation of wires and cables and before electrical circuitry has been energized, demonstrate product capability and compliance with requirements.

1. Procedures: Perform each visual and mechanical inspection and electrical test stated in NETA ATS, Section 7.3.1. Certify compliance with test parameters.

B. Correct malfunctioning conductors and cables at Project site, where possible, and retest to demonstrate compliance; otherwise, remove and replace with new units and retest.

PART 4: MEASUREMENT AND PAYMENT

4.01 CABLES (500 MCM):

A. Cables (500 MCM) will be measured per linear foot.

B. Cables (500 MCM) will be paid for at the Contract unit price bid per linear foot. This price shall be full compensation for all terminations, materials, including labor, equipment, and all work incidentals necessary to complete the item as specified

4.02 CABLES (#14):

A. Cables (#14) will be measured per linear foot.

B. Cables (#14) will be paid for at the Contract unit price bid per linear foot. This price shall be full compensation for all terminations, materials, including labor, equipment, and all work incidentals necessary to complete the item as specified

4.03 CABLES #4, 2 KV:

A. Cables #4, 2 KV will be measured per linear foot.

B. Cables #4, 2 KV will be paid for at the Contract unit price bid per linear foot. This price shall be full compensation for all terminations, materials, including labor, equipment, and all work incidentals necessary to complete the item as specified.

4.04 CABLES (#1/0):

A. Cables (#1/0) will be measured per linear foot.

B. Cables (#1/0) will be paid for at the Contract unit price bid per linear foot. This price shall be full compensation for all terminations, materials, including labor, equipment, and all work incidentals necessary to complete the item as specified.

4.05 CABLES (#4/0):

A. Cables (#4/0) will be measured per linear foot.

B. Cables (#4/0) will be paid for at the Contract unit price bid per linear foot. This price shall be full compensation for all terminations, materials, including labor, equipment, and all work incidentals necessary to complete the item as specified.

4.06 CABLES #6, 600V:

A. Cables #6, 600V will be measured per linear foot.

B. Cables #6, 600V will be paid for at the Contract unit price bid per linear foot. This price shall be full compensation for all terminations, materials, including labor, equipment, and all work incidentals necessary to complete the item as specified.

4.07 CABLES #4/0, 600V:

C. Cables #4/0, 600V will be measured per linear foot.

D. Cables #4/0, 600V will be paid for at the Contract unit price bid per linear foot. This price shall be full compensation for all terminations, materials, including labor, equipment, and all work incidentals necessary to complete the item as specified.

END OF SECTION

MTA Maryland

MARYLAND TRANSIT ADMINISTRATION

MARYLAND DEPARTMENT OF TRANSPORTATION

Martin O'Malley, Governor • Anthony G. Brown, Lt. Governor
Beverley K. Swaim-Staley, Secretary • Ralign T. Wells, Administrator

TO: All Planholders

FROM: Maryland Transit Administration

SUBJECT: **ADDENDUM NO. 5**
Contract No.: T-0208-0140
MARC Wedge Storage Yard at Union Station

DATE: September 26, 2011

Enclosed and effective this date is Addendum No. 5 to the subject Contract. This addendum delays the Bid Opening date of Friday, September 30, 2011 to **Friday, October 14, 2011 at 2:00 p.m., 6 St. Paul Street, Baltimore, MD 21202, Conference Room #742.**

A conformed copy of revised specification sections is attached. The Bidder shall acknowledge receipt of this Addendum by completing and returning this form with the bid package.

All other terms and conditions remain unchanged.

Sincerely,

Vanessa Ashe

Vanessa Ashe, Procurement Officer
Professional Services/Construction/Installation Section
Procurement Division

Acknowledgement of receipt of ADDENDUM #5 to Solicitation #T-0208-0140

Vendor Name: _____

_____ _____

Authorized Representative's Signature Date

ADDENDUM NO.: 5
DATE: 09/26/11
CONTRACT NO.: T-0208-0140

The following additions, deletions, and modifications are hereby made a part of the Contract Documents of MARC Wedge Storage Yard at Union Station, Contract No.: T-0208-0140.

Item No.	Page	Modification
I. CONTRACT SPECIFICATIONS		
1	Notice to Contractors Page NTC 2 of 7	Replace page NTC 2 of 7 only – Revised Bid Opening date
2	Bid Form Page BF 1 of 28	Replace page BF 1 of 28 only – Revised Bid Opening date
3	Bid/Proposal Affidavit Pages BPA 1 thru 5	Replace Bid/Proposal Affidavit in its entirety – Document revised per Maryland Department of Transportation (MDOT)
4	Contract Affidavit Pages CA 1 thru 4	Replace Contract Affidavit in its entirety – Document revised per Maryland Department of Transportation (MDOT)

4. BID DUE DATE & TIME

Sealed Bids addressed to the Maryland Transit Administration, Procurement Division, 6 St. Paul Street, Baltimore, Maryland 21202-1614, and marked **"Bid for Contract No. T-0208-0140, MARC Wedge Storage Yard At Union Station"**, will be received at the above address until but not after 2:00 P.M. local time, **October 14, 2011**. At that time, the Bids will be publicly opened and read aloud at a location at the same address. Hand delivered bids should be deposited in the Bid Box located on the 7th Floor before the 2:00 P.M. deadline. Any bids received after the date and time specified shall not be considered.

5. ELECTRONIC VERSION OF BID DOCUMENTS

The bid documents will be available by electronic means. The Bidder acknowledges and accepts full responsibility to ensure that the Bidder has made no changes to the Administration's bid documents. In the event of a conflict between the versions of the bid documents in the bidder's possession and the version maintained by the Procurement Officer, the version maintained by the Procurement Officer shall govern.

6. AVAILABILITY OF DOCUMENTS

Specifications may be downloaded from the MTA web site. Bidders will be required to register the first time specifications are downloaded and a login number will be assigned. This number should be used every time the bidder downloads the documents for this contract. Bidders must supply accurate information in order to receive notice of all subsequent addenda.

TO OBTAIN THE SPECIFICATIONS:
Visit MTA's website at (www.mta.maryland.gov) , follow the links for "Doing Business with the MTA" – "To view Procurements" - "Professional & Construction/Installation Section", and download the Specifications for this procurement.

TO OBTAIN THE DRAWINGS:
E-mail Vanessa Ashe at vahe@mta.maryland.gov requesting the contract drawings and supplying the following information: the contact person, company name, mailing address, phone # and e-mail address. The drawings (CD) will be mailed to you at no cost. You also have the option of picking up the CD containing the drawings at: 6 Saint Paul Street, Baltimore, MD 21202, Wm Donald Schaefer Bldg., 7th floor.

STATE OF MARYLAND DEPARTMENT OF TRANSPORTATION
MARYLAND TRANSIT ADMINISTRATION
BID FORM
FOR
CONTRACT NO.: T-0208-0140

TO: MARYLAND TRANSIT ADMINISTRATION
ATTN: PROCUREMENT DIVISION
6 SAINT PAUL STREET, 7TH FLOOR
BALTIMORE, MD 21202-1614

BID OPENING DATE:
October 14, 2011
BID OPENING TIME:
2:00 PM

BID OF: _____
(Bidder's Name)

PROJECT DESCRIPTION:
This contract is for the construction of a MARC Layover Facility in the Washington, CD area near Ivy City. The proposed yard will be a 3 track stub-end configuration with the capacity for three additional tracks for future expansion, and will function as a mid-day layover facility for MARC electric and diesel hauled trains.

1. This bid is hereby submitted to the Maryland Transit Administration (hereinafter sometimes called the "Administration") in response to NOTICE TO CONTRACTORS dated _____ .

2. The UNDERSIGNED has thoroughly examined, acknowledges receipt of, and is familiar with the Contract Documents as well as the various instructions, information, and requirements covering the same, all as mentioned herein and in said NOTICE TO CONTRACTORS.

3. In compliance with said NOTICE TO CONTRACTORS the UNDERSIGNED hereby proposes to furnish all labor, equipment, and materials and perform all work described and in strict accordance with the provisions of the Contract Documents for the consideration of the amounts, lump sum and unit prices listed in the attached Unit Price Schedule, and agrees that, upon Notice of Award, within one hundred fifty (150) calendar days after the date of opening of bids, unless mutually extended, he will within ten (10) calendar days after receipt of the prescribed forms, execute the Contract and furnish a performance bond and payment bond (if such bonds are required by the Contract Documents) on forms furnished by the Administration with good and sufficient surety or sureties.

4. The UNDERSIGNED agrees and understands that the time of completion is as specified in the Special Provisions, unless the completion dates are extended as provided for in the Contract Documents.

5. The UNDERSIGNED agrees to pay liquidated damages in the amount specified in the Special Provisions for each and every calendar day after the completion date that the work remains incomplete unless an extension is granted as provided for in the Contract Documents.

BID/PROPOSAL AFFIDAVIT

A. AUTHORITY

I HEREBY AFFIRM THAT:

I, _____ (print name), possess the legal authority to make this Affidavit.

B. CERTIFICATION REGARDING COMMERCIAL NONDISCRIMINATION

The undersigned bidder hereby certifies and agrees that the following information is correct: In preparing its bid on this project, the bidder has considered all proposals submitted from qualified, potential subcontractors and suppliers, and has not engaged in "discrimination" as defined in §19-103 of the State Finance and Procurement Article of the Annotated Code of Maryland. "Discrimination" means any disadvantage, difference, distinction, or preference in the solicitation, selection, hiring, or commercial treatment of a vendor, subcontractor, or commercial customer on the basis of race, color, religion, ancestry, or national origin, sex, age, marital status, sexual orientation, or on the basis of disability or any otherwise unlawful use of characteristics regarding the vendor's, supplier's, or commercial customer's employees or owners. "Discrimination" also includes retaliating against any person or other entity for reporting any incident of "discrimination". Without limiting any other provision of the solicitation on this project, it is understood that, if the certification is false, such false certification constitutes grounds for the State to reject the bid submitted by the bidder on this project, and terminate any contract awarded based on the bid. As part of its bid or proposal, the bidder herewith submits a list of all instances within the past 4 years where there has been a final adjudicated determination in a legal or administrative proceeding in the State of Maryland that the bidder discriminated against subcontractors, vendors, suppliers, or commercial customers, and a description of the status or resolution of that determination, including any remedial action taken. Bidder agrees to comply in all respects with the State's Commercial Nondiscrimination Policy as described under Title 19 of the State Finance and Procurement Article of the Annotated Code of Maryland.

B-1. CERTIFICATION REGARDING MINORITY BUSINESS ENTERPRISES.

The undersigned bidder hereby certifies and agrees that it has fully complied with the State Minority Business Enterprise Law, State Finance and Procurement Article, §14-308(a)(2), Annotated Code of Maryland, which provides that, except as otherwise provided by law, a contractor may not identify a certified minority business enterprise in a bid or proposal and:

(1) Fail to request, receive, or otherwise obtain authorization from the certified minority business enterprise to identify the certified minority proposal;

(2) Fail to notify the certified minority business enterprise before execution of the contract of its inclusion in the bid or proposal;

(3) Fail to use the certified minority business enterprise in the performance of the contract; or

(4) Pay the certified minority business enterprise solely for the use of its name in the bid or proposal.

Without limiting any other provision of the solicitation on this project, it is understood that if the certification is false, such false certification constitutes grounds for the State to reject the bid submitted by the bidder on this project, and terminate any contract awarded based on the bid.

C. AFFIRMATION REGARDING BRIBERY CONVICTIONS

I FURTHER AFFIRM THAT:

Neither I, nor to the best of my knowledge, information, and belief, the above business (as is defined in Section 16-101(b) of the State Finance and Procurement Article of the Annotated Code of Maryland), or any of its officers, directors, partners, controlling stockholders, or any of its employees directly involved in the business's contracting activities including obtaining or performing contracts with public bodies has been convicted of, or has had probation before judgment imposed pursuant to Criminal Procedure Article, §6-220, Annotated Code of Maryland, or has pleaded nolo contendere to a charge of, bribery, attempted bribery, or conspiracy to bribe in violation of Maryland law, or of the law of any other state or federal law, except as follows (indicate the reasons why the affirmation cannot be given and list any conviction, plea, or imposition of probation before judgment with the date, court, official or administrative body, the sentence or disposition, the name(s) of person(s) involved, and their current positions and responsibilities with the business):

_____

_____

_____.

D. AFFIRMATION REGARDING OTHER CONVICTIONS

I FURTHER AFFIRM THAT:

Neither I, nor to the best of my knowledge, information, and belief, the above business, or any of its officers, directors, partners, controlling stockholders, or any of its employees directly involved in the business's contracting activities including obtaining or performing contracts with public bodies, has:

(1) Been convicted under state or federal statute of:

(a) A criminal offense incident to obtaining, attempting to obtain, or performing a public or private contract; or

(b) Fraud, embezzlement, theft, forgery, falsification or destruction of records or receiving stolen property;

(2) Been convicted of any criminal violation of a state or federal antitrust statute;

(3) Been convicted under the provisions of Title 18 of the United States Code for violation of the Racketeer Influenced and Corrupt Organization Act, 18 U.S.C. §1961 et seq., or the Mail Fraud Act, 18 U.S.C. §1341 et seq., for acts in connection with the submission of bids or proposals for a public or private contract;

(4) Been convicted of a violation of the State Minority Business Enterprise Law, §14-308 of the State Finance and Procurement Article of the Annotated Code of Maryland;

(5) Been convicted of a violation of §11-205.1 of the State Finance and Procurement Article of the Annotated Code of Maryland;

(6) Been convicted of conspiracy to commit any act or omission that would constitute grounds for conviction or liability under any law or statute described in subsections (1)—(5) above;

(7) Been found civilly liable under a state or federal antitrust statute for acts or omissions in connection with the submission of bids or proposals for a public or private contract;

(8) Been found in a final adjudicated decision to have violated the Commercial Nondiscrimination Policy under Title 19 of the State Finance and Procurement Article of the Annotated Code of Maryland with regard to a public or private contract; or

(9) Admitted in writing or under oath, during the course of an official investigation or other proceedings, acts or omissions that would constitute grounds for conviction or liability under any law or statute described in §§B and C and subsections D(1)—(8) above, except as follows (indicate reasons why the affirmations cannot be given, and list any conviction, plea, or imposition of probation before judgment with the date, court, official or administrative body, the sentence or disposition, the name(s) of the person(s) involved and their current positions and responsibilities with the business, and the status of any debarment):

_____

_____

_____.

E. AFFIRMATION REGARDING DEBARMENT

I FURTHER AFFIRM THAT:

Neither I, nor to the best of my knowledge, information, and belief, the above business, or any of its officers, directors, partners, controlling stockholders, or any of its employees directly involved in the business's contracting activities, including obtaining or performing contracts with public bodies, has ever been suspended or debarred (including being issued a limited denial of participation) by any public entity, except as follows (list each debarment or suspension providing the dates of the suspension or debarment, the name of the public entity and the status of the proceedings, the name(s) of the person(s) involved and their current positions and responsibilities with the business, the grounds of the debarment or suspension, and the details of each person's involvement in any activity that formed the grounds of the debarment or suspension).

_____

_____

_____.

F. AFFIRMATION REGARDING DEBARMENT OF RELATED ENTITIES

I FURTHER AFFIRM THAT:

(1) The business was not established and it does not operate in a manner designed to evade the application of or defeat the purpose of debarment pursuant to Sections 16-101, et seq., of the State Finance and Procurement Article of the Annotated Code of Maryland; and

(2) The business is not a successor, assignee, subsidiary, or affiliate of a suspended or debarred business, except as follows (you must indicate the reasons why the affirmations cannot be given without qualification):

_____

_____

_____.

G. SUB-CONTRACT AFFIRMATION

I FURTHER AFFIRM THAT:

Neither I, nor to the best of my knowledge, information, and belief, the above business, has knowingly entered into a contract with a public body under which a person debarred or suspended under Title 16 of the State Finance and Procurement Article of the Annotated Code of Maryland will provide, directly or indirectly, supplies, services, architectural services, construction related services, leases of real property, or construction.

H. AFFIRMATION REGARDING COLLUSION

I FURTHER AFFIRM THAT:

Neither I, nor to the best of my knowledge, information, and belief, the above business has:

(1) Agreed, conspired, connived, or colluded to produce a deceptive show of competition in the compilation of the accompanying bid or offer that is being submitted;

(2) In any manner, directly or indirectly, entered into any agreement of any kind to fix the bid price or price proposal of the bidder or offeror or of any competitor, or otherwise taken any action in restraint of free competitive bidding in connection with the contract for which the accompanying bid or offer is submitted.

I. CERTIFICATION OF TAX PAYMENT

I FURTHER AFFIRM THAT:

Except as validly contested, the business has paid, or has arranged for payment of, all taxes due the State of Maryland and has filed all required returns and reports with the Comptroller of the Treasury, the State

Department of Assessments and Taxation, and the Department of Labor, Licensing, and Regulation, as applicable, and will have paid all withholding taxes due the State of Maryland prior to final settlement.

J. CONTINGENT FEES

I FURTHER AFFIRM THAT:

The business has not employed or retained any person, partnership, corporation, or other entity, other than a bona fide employee, bona fide agent, bona fide salesperson, or commercial selling agency working for the business, to solicit or secure the Contract, and that the business has not paid or agreed to pay any person, partnership, corporation, or other entity, other than a bona fide employee, bona fide agent, bona fide salesperson, or commercial selling agency, any fee or any other consideration contingent on the making of the Contract.

K. ACKNOWLEDGEMENT

I ACKNOWLEDGE THAT this Affidavit is to be furnished to the Procurement Officer and may be distributed to units of: (1) the State of Maryland; (2) counties or other subdivisions of the State of Maryland; (3) other states; and (4) the federal government. I further acknowledge that this Affidavit is subject to applicable laws of the United States and the State of Maryland, both criminal and civil, and that nothing in this Affidavit or any contract resulting from the submission of this bid or proposal shall be construed to supersede, amend, modify or waive, on behalf of the State of Maryland, or any unit of the State of Maryland having jurisdiction, the exercise of any statutory right or remedy conferred by the Constitution and the laws of Maryland with respect to any misrepresentation made or any violation of the obligations, terms and covenants undertaken by the above business with respect to (1) this Affidavit, (2) the contract, and (3) other Affidavits comprising part of the contract.

I DO SOLEMNLY DECLARE AND AFFIRM UNDER THE PENALTIES OF PERJURY THAT THE CONTENTS OF THIS AFFIDAVIT ARE TRUE AND CORRECT TO THE BEST OF MY KNOWLEDGE, INFORMATION, AND BELIEF.

Date: _____

By: _____ (print name of Authorized Representative and Affiant)

_____ (signature of Authorized Representative and Affiant)

CONTRACT AFFIDAVIT

A. AUTHORITY

I HEREBY AFFIRM THAT:

I, _____ (print name), possess the legal authority to make this Affidavit.

B. CERTIFICATION OF REGISTRATION OR QUALIFICATION WITH THE STATE DEPARTMENT OF ASSESSMENTS AND TAXATION

I FURTHER AFFIRM THAT:

The business named above is a (check applicable box):

(1) Corporation — ☐ domestic or ☐ foreign;
(2) Limited Liability Company — ☐ domestic or ☐ foreign;
(3) Partnership — ☐ domestic or ☐ foreign;
(4) Statutory Trust — ☐ domestic or ☐ foreign;
(5) ☐ Sole Proprietorship.

and is registered or qualified as required under Maryland Law. I further affirm that the above business is in good standing both in Maryland and (IF APPLICABLE) in the jurisdiction where it is presently organized, and has filed all of its annual reports, together with filing fees, with the Maryland State Department of Assessments and Taxation. The name and address of its resident agent (IF APPLICABLE) filed with the State Department of Assessments and Taxation is:

Name and Department ID Number:_____ Address:_____

and that if it does business under a trade name, it has filed a certificate with the State Department of Assessments and Taxation that correctly identifies that true name and address of the principal or owner as:

Name and Department ID Number: _____
Address:_____.

C. FINANCIAL DISCLOSURE AFFIRMATION

I FURTHER AFFIRM THAT:

I am aware of, and the above business will comply with, the provisions of State Finance and Procurement Article, §13-221, Annotated Code of Maryland, which require that every business that enters into contracts, leases, or other agreements with the State of Maryland or its agencies during a calendar year under which the business is to receive in the aggregate $100,000 or more

shall, within 30 days of the time when the aggregate value of the contracts, leases, or other agreements reaches $100,000, file with the Secretary of State of Maryland certain specified information to include disclosure of beneficial ownership of the business.

D. POLITICAL CONTRIBUTION DISCLOSURE AFFIRMATION

I FURTHER AFFIRM THAT:

I am aware of, and the above business will comply with, Election Law Article, §§14-101 — 14-108, Annotated Code of Maryland, which requires that every person that enters into contracts, leases, or other agreements with the State of Maryland, including its agencies or a political subdivision of the State, during a calendar year in which the person receives in the aggregate $100,000 or more shall file with the State Board of Elections a statement disclosing contributions in excess of $500 made during the reporting period to a candidate for elective office in any primary or general election.

E. DRUG AND ALCOHOL FREE WORKPLACE

(Applicable to all contracts unless the contract is for a law enforcement agency and the agency head or the agency head's designee has determined that application of COMAR 21.11.08 and this certification would be inappropriate in connection with the law enforcement agency's undercover operations.)

I CERTIFY THAT:

(1) Terms defined in COMAR 21.11.08 shall have the same meanings when used in this certification.

(2) By submission of its bid or offer, the business, if other than an individual, certifies and agrees that, with respect to its employees to be employed under a contract resulting from this solicitation, the business shall:

(a) Maintain a workplace free of drug and alcohol abuse during the term of the contract;

(b) Publish a statement notifying its employees that the unlawful manufacture, distribution, dispensing, possession, or use of drugs, and the abuse of drugs or alcohol is prohibited in the business' workplace and specifying the actions that will be taken against employees for violation of these prohibitions;

(c) Prohibit its employees from working under the influence of drugs or alcohol;

(d) Not hire or assign to work on the contract anyone who the business knows, or in the exercise of due diligence should know, currently abuses drugs or alcohol and is not actively engaged in a bona fide drug or alcohol abuse assistance or rehabilitation program;

(e) Promptly inform the appropriate law enforcement agency of every drug-related crime that occurs in its workplace if the business has observed the violation or otherwise has reliable information that a violation has occurred;

(f) Establish drug and alcohol abuse awareness programs to inform its employees about:

(i) The dangers of drug and alcohol abuse in the workplace;
(ii) The business's policy of maintaining a drug and alcohol free workplace;
(iii) Any available drug and alcohol counseling, rehabilitation, and employee assistance programs; and
(iv) The penalties that may be imposed upon employees who abuse drugs and alcohol in the workplace;

(g) Provide all employees engaged in the performance of the contract with a copy of the statement required by §E(2)(b), above;

(h) Notify its employees in the statement required by §E(2)(b), above, that as a condition of continued employment on the contract, the employee shall:

(i) Abide by the terms of the statement; and
(ii) Notify the employer of any criminal drug or alcohol abuse conviction for an offense occurring in the workplace not later than 5 days after a conviction;

(i) Notify the procurement officer within 10 days after receiving notice under §E(2)(h)(ii), above, or otherwise receiving actual notice of a conviction;

(j) Within 30 days after receiving notice under §E(2)(h)(ii), above, or otherwise receiving actual notice of a conviction, impose either of the following sanctions or remedial measures on any employee who is convicted of a drug or alcohol abuse offense occurring in the workplace:

(i) Take appropriate personnel action against an employee, up to and including termination; or
(ii) Require an employee to satisfactorily participate in a bona fide drug or alcohol abuse assistance or rehabilitation program; and

(k) Make a good faith effort to maintain a drug and alcohol free workplace through implementation of §E(2)(a)—(j), above.

(3) If the business is an individual, the individual shall certify and agree as set forth in §E(4), below, that the individual shall not engage in the unlawful manufacture, distribution, dispensing, possession, or use of drugs or the abuse of drugs or alcohol in the performance of the contract.

(4) I acknowledge and agree that:

(a) The award of the contract is conditional upon compliance with COMAR 21.11.08 and this certification;

(b) The violation of the provisions of COMAR 21.11.08 or this certification shall be cause to suspend payments under, or terminate the contract for default under COMAR 21.07.01.11 or 21.07.03.15, as applicable; and

(c) The violation of the provisions of COMAR 21.11.08 or this certification in connection with the contract may, in the exercise of the discretion of the Board of Public Works, result in suspension and debarment of the business under COMAR 21.08.03.

F. CERTAIN AFFIRMATIONS VALID

I FURTHER AFFIRM THAT:

To the best of my knowledge, information, and belief, each of the affirmations, certifications, or acknowledgements contained in that certain Bid/Proposal Affidavit dated _____, 20___, and executed by me for the purpose of obtaining the contract to which this Exhibit is attached remains true and correct in all respects as if made as of the date of this Contract Affidavit and as if fully set forth herein.

I DO SOLEMNLY DECLARE AND AFFIRM UNDER THE PENALTIES OF PERJURY THAT THE CONTENTS OF THIS AFFIDAVIT ARE TRUE AND CORRECT TO THE BEST OF MY KNOWLEDGE, INFORMATION, AND BELIEF.

Date: _____

By: _____ (printed name of Authorized Representative and Affiant)

_____ (signature of Authorized Representative and Affiant)

MTA Maryland

MARYLAND TRANSIT ADMINISTRATION

MARYLAND DEPARTMENT OF TRANSPORTATION

Martin O'Malley, Governor • Anthony G. Brown, Lt. Governor
Beverley K. Swaim-Staley, Secretary • Ralign T. Wells, Administrator

TO: All Planholders

FROM: Maryland Transit Administration

SUBJECT: **ADDENDUM NO. 4**
Contract No.: T-0208-0140
MARC Wedge Storage Yard at Union Station

DATE: September 14, 2011

Enclosed and effective this date is Addendum No. 4 to the subject Contract. This addendum delays the Bid Opening date of Friday, September 16, 2011 to **Friday, September 30, 2011 at 2:00 p.m., 6 St. Paul Street, Baltimore, MD 21202, Conference Room #742.**

A conformed copy of revised specification sections is attached. A list of the changes made to this contract is attached to this Addendum. Also attached are the responses to contractors' questions.

The Bidder shall acknowledge receipt of this Addendum by completing and returning this form with the bid package. All other terms and conditions remain unchanged.

Sincerely,

Vanessa Ashe

Vanessa Ashe, Procurement Officer
Professional Services/Construction/Installation Section
Procurement Division

Acknowledgement of receipt of ADDENDUM #4 to Solicitation #T-0208-0140

Vendor Name: _____

_____ _____

Authorized Representative's Signature Date

MARC WEDGE STORAGE YARD AT UNION STATION
CONTRACT NO. T-0208-0140
September 14, 2011

#	SPEC SECTION	QUESTIONS	RESPONSES
1		The spec (Section 08330, 2.01, pg SP-570) calls for a Flexon Speed-Master Series Models 1500, which is as described a high speed polyester pvc type door. The drawing (A-02, Sheet 203 of 264) is labeled as a metal roll-up. Would a metal door be an approved equal or is the drawing just mislabeled?	A metal roll up door is acceptable, the specifications will be modified to facilitate this change.
2		Division 04810 section 2.03 (spec page SP-376) discusses masonry anchors to the structural steel, however, there are no details on the spacing between anchors or between the wall and the structural steel. Will there be more information on the wall connections or is it the prerogative of the masonry contractor?	Paragraph 3.06 indicates column anchors to be 16 inches on center vertically. The space between the cmu and steel shall be a standard moint width and filled with backer rod and sealant
3		There are no details of the interface between the masonry wall and the structural steel in the Vehicle Storage Building. Is there a prescribed void between the steel and masonry? And will that void be sealed with?	See answer to #2
4		Reference Spec. Section 07210.1.01 A.1. Specifications seem to call for under slab-On-grade insulation, however drawings do not indicate locations or provide details for this insulation. Please provide such details and locations.	Drawings will be revised to show the extent of the under slab perimeter insulation
5		Reference Sheet 206, Edge Joint Note on Section 2 refers to provide premolded joint filler and sealant where slab is interrupted by Masonry Walls. Please confirm this detail is typical to all slab and pavement edge joints and not limited to Masonry Wall application.	Yes
6		OCIP Safety Construction Guidelines- Designation of Safety Representative (p. PSP-10) – Will a full time qualified Safety Engineer/Supervisor be required on this project?	Yes
7		If a full time Safety Engineer is required for this project, what are the educational, certification, experience, etc. requirements for this individual?	Experience in: Occupational safety and health, OSHA regulations (Ref. 1926) for construction site, construction safety and security inspection, first aid and personal protective equipment
8		OCIP Safety Construction Guidelines- Safety Orientation (p. PSP-11) – What is the charge for the MTA (8) hour training course? How often is this course given? Can the Contractor's Safety Personnel obtain certification as a trainer and if so, what is the cost to obtain this certification?	There will be charges by Amtrak and CSX for training, The Amtrak Contact is Dawn Bey @ 215-349-1553 and for CSX please contact RWT @904-296-8088,

#	SPEC SECTION	QUESTIONS	RESPONSES
9		Appendix 'E' Section 01141A Safety and protection of Railroad Traffic & property 3.12 Safety Training- Please provide point of contact at AMTRAK to obtain pricing on the specified safety training.	The Amtrak Contact is Dawn Bey @ 215-349-1553
10		Specification Section 01150 Interface Requirements 1.02.B.13 (p. SP-19) – Statement is made " The Contractor shall be responsible for all costs associated with installing, maintaining, and removing temporary grade crossings **including flagmen** protection during construction……". Specification 01150 1.03. A. 10.)b.) Flagging/Inspection Service (p. SP-30)- Statement is made "Agency shall reimburse CSXT directly for all costs of flagging that is required on account of construction within CSXT property…..". At the Pre-Bid Conference statement was made that MTA will provide flag personnel at no cost to the Contractor. For bidding purposes, assumption is made the specification 1.02.B.13 (p. SP-19) is incorrect, and that no costs will be assessed the Contractor for flagging fees as stated in Specification 01150 1.03.A.3 (p. SP-32) "Payment to CSXT for flagmen will be made by the Administration at no cost to the Contractor". Do you concur?	Yes, the specification has been revised to remove "including flagmen protection during construction"
11	Specification Section 01150	Interface Requirements 1.03.A.3 (p. SP-32) – What is the numeric value of *"XXX" hours*?	3400
12	Bid Form, Item #2, Miscellaneous Work Allowance, page BF-4 & Section 01210.4.01.A, page SP-38	Since bidder cannot ascertain at the time of bid what the amount of miscellaneous work will be on the completed contract, assumption is made a value of zero dollars is to be placed into the unit and total price of the proposal for this bid item. Do you concur? If not, please eliminate the bid item or provide the dollar amount which all bidders are to place in this bid item.	The dollar amount has been inserted on the Bid Form
13	Specification Section 13601, Metal Inspection Platform 3.07, page SP-667	Should this portion of the section be deleted since no thermal insulation is required on the Inspection Platform?	The Section 3.07 will be deleted.
14	Specification Section 13601, Metal Inspection Platform 3.08.E&F, page SP-669; 3.11, PAGE sp-671 & 3.13, page 672	Should these portions of the section be deleted since no roof ventilators or other operable accessories are required for the Inspection Platform?	The Section 3.08 E and F will be deleted. The Section 3.11 will also be deleted. The Section 3.13 shall be remained.

#	SPEC SECTION	QUESTIONS	RESPONSES
15	Bid Item, Line Item #209, Insurance Premium Contingency	Request is made to remove the costs associated with the Railroad Protective Insurance Policy from the scope of this bid item. The costs to the owner should be the same whether provided by the Owner or the Contractor. Will you grant this request?	No
16		Specification Section 02510 Water Distribution System 1.01. D. (p. SP-147)- Statement is made "This section includes requirements to construct, test and **chlorinate**……as specified in DCWASA Standard Specifications Section 02610….". DCWASA Specification Section 02610.06.B.1. (p. 02610-18) **Work by the District** includes "Test Pumps, gages……will be **furnished, installed and operated by the District at no cost to the Contractor".** Specification Sections 02510.4 Measurement & Payment 4.04, 4.05 & 4.06 (pp. 162 & 163) parts B.- Statement is made the pricing includes the cost of chlorination. Assumption is made the measurement and payment section is in error, and that the chlorination will be performed by the District at no cost to the Contractor. Do you concur?	This will be the Contractor's responsibility. See Specification Section 02510 Water Distribution System 1.01. C.
17		Assumption is made that any Inspection Fees water & sewer construction levied by DCWATER for this project will be paid MTA at no cost to the Contractor. Do you concur?	Contractor is responsible for all inspection fees for water & sewer construction. See Specification Section 02510 Water Distribution System 1.01. C and Specification Section 02530 Sanitary Sewer Collection System 1.01. C.
18		Assumption is made that any Connection Fees for water meter connection and sewer system connection levied by DCWATER for this project will be paid by MTA at no cost to the Contractor. Do you concur?	Water & Sewer connections will be made to Amtrak's private utilities; therefore it is anticipated that there will not be any connection fees. If WASA deems fees are required the Contractor will be responsible for all connection fees for water meter connection and sewer system connection. See Specification Section 02510 Water Distribution System 1.01. C and Specification Section 02530 Sanitary Sewer Collection System 1.01. C.
19		Throughout the specification sections dealing with water, sewer & drainage reference is made to DCWASA Standard Specifications. DCWASA (a.k.a- DCWATER) does not have STANDARD SPECIFICATIONS! Specifications for the construction of water and sewer are job specific and prepared for each particular project. Please forward a copy of the Water and Sewer Specifications for this project. The following Sections are needed: 02705- Sewer Manholes, 02730- Sewer Pipe; 02610- Pipe, Water Main; 02640- Gate/Butterfly Valves; 02642- Fire Hydrants; 02645- Water Meters; 02650- Water Service Connections	The DCWASA Master Specs is available from District of Columbia Water and Sewer Authority, Permits and Documents Department. The address is: 5000 Overlook Avenue, SW, Washington, DC 20032. The phone number is: 202-787-2057.

#	SPEC SECTION	QUESTIONS	RESPONSES
20		The bid forms do not include fixed pricing for allowance bid items 2 and 3. Will these be provided in a future addendum?	Fixed pricing for items 2 & 3 have been inserted
21		Please confirm that the unit for item 82 "Railroad Spill Collection Pan" should be LF not EA as noted in the schedule of prices.	The unit shall be LF. Bid units will be corrected via addendum.
22		Will fixed prices be provided for allowance items 2 and 3?	Yes, fixed prices have been inserted in the Bid Schedule
23	Bid Form - page BF 25 - Item #209 and Appendix I - page 5	Is the Insurance Cost Worksheet available in either Word or Excel format? In section C, there is room for only two workman's compensation codes. This contract will have a minimum of six to eight codes utilized.	No as it is a proprietary document. If contractors have more than 2 class codes they should attach a separate document and summarize inside the form.
24		What costs are to be included in this form? Prime only or Prime plus subcontractors?	Prime contractors should do their best to identify and remove insurance costs from their own work as well as that of all known or anticipated subcontractors to ensure they are pricing competitively.
25		If the costs are to be Prime only, then this form can be filled out and included with our Bid Proposal. As stated below the Signature Block, are we to submit the Worksheets for all subs utilized in our Proposal in this alternate.	See answer to Question #25.
26		If the costs for this form are to be Prime plus Subcontractors, then it would next to impossible to compile all the data from various subcontractors into one spreadsheet and submit with the Bid Proposal. As you are aware, the Prime Contractors receive pricing from various subcontractors up to just a few minutes before the submission of bids. We respectfully request that submission of this form be delayed to be submitted 48 hours after receipt of bids. Additionally, because of the effort required to fill out this form, we request that only the low and second bidders be required to submit it. Furthermore, we request that item 209 be deleted from the Bid Submission form. submission of the Insurance Cost Worksheet within 48 hours will replace that item.	See answer to Question #25.

#	SPEC SECTION	QUESTIONS	RESPONSES
27		At the bottom of the first page of the Worksheet, there are requirements for extensive additional information. These include "Schedule of Values, General Liability declaration and rate pages, Workers Compensation declaration and rate pages, Umbrella/Excess Liability declaration and rate pages, Experience Modification worksheet, and 5 years actual loss experience for each line of coverage in which the Contractor retains more than $5,000". Is it truly the intent of MTA to receive all of this data from each Prime and his Subcontractors with the Bid Submission? there may be anywhere from 10 to 20 subcontractors involved in this Contract. When you figure there will probably be at least 6 to 10 Prime Contractors, then MTA will be receiving upwards of 200 multi-page documents for the Insurance Cost Worksheet Alone. Again, we respectfully request that the due date for this requirement is delayed to 48 hours after the receipt of bids and be limited to the low two bidders.	No back up documentation is required at bid time. These are simply all the areas and or methods by which various contractors may need to examine in order to accurately identify and remove insurance cost(s).
28		Please refer to sheets 146 through 167 of 264, which comprise the retaining walls. In addition to the plan sheets, please refer to section 02488 (SP-139 through SP-146) of the Contract Specification Book. Are we correct in inferring that the designed solider pile post is to extend to the bottom of the augured shaft with no reinforcing steel cage in the foundation?	Yes
29		Drawing ET-2 (Sheet 267) states that for some of the new foundations and guy anchors, "Contractor to supply steel required for these foundations and guy anchors to RR." Does this mean that Amtrak will be supplying its own concrete when it installs these foundations and guy anchors?	Yes
30		Drawing ET-27 (Sheet 293) says that Amtrak is transferring existing insulated cable from temporary pole line to the new structure. The contractor bill of material states that contractor is to furnish the feeder cross arm (FC-4), but is Amtrak or the contractor to install this arm?	Contractor to supply, Amtrak to install.
31		On drawing ET-37 (Sheet 303) there is a note "These items are by others" under the contractor bill of material. Are these items furnished and installed by others, furnished by others and installed by contractor, or furnished by contractor and installed by others?	These (3) items are furnished and installed in another contract.

#	SPEC SECTION	QUESTIONS	RESPONSES
32		Drawings ET-36 and ET-38 (Sheets 302 and 304) indicate that two feeder tap assemblies FTM-2(MOD) are to be installed in each location, but they do not appear on the contractor bill of material. Is the contractor responsible for furnishing and installing these assemblies?	Feeder tap assemblies allocated on profile sheet (ET-18) Bill of Material
33		On the catenary erection diagrams, there is a contractor bill of material and an Amtrak bill of material. Our interpretation is that the Amtrak bill of material lists items that are furnished and installed by Amtrak, and is provided for information only, while the contractor bill of materials is a list of items furnished by contractor, and installed by either contractor or Amtrak, depending on location and the notes in the plans. Is this correct?	Yes. Division of work is clarified in the work statement.
34		What grade bronze is required for the following items on the contractor bill of materials?	For Items 34(a) - (e), refer to Amtrak C.E 565 Specification added to Appendix E.
		a. Item 19 BOLT, MACHINE, BRONZE, 5/8" X 2 1/2"-11UNC-2A WITH HEX NUT	
		b. Item 21 BOLT, MACHINE, BRONZE, 1/2" X 2 3/4"-13UNC-2A 1 5/8" THREAD WITH HEX NUT AND LOCK WASHER	
		c. Item 58 J-BOLT, 1/2" X 2 3/8 13UNC-2A, BRONZE CLASS B WITH HEX NUT	
		d. Item 118 U-BOLT, BRONZE, 5/8"DIA X 2 7/8" LG. X 1 1/2" OPENING C TO C X 1 5/8 THREAD	
		e. Item 121 U-BOLT, BRONZE, 2"DIA X 10 1/8" X 4 1/2" OPENING C TO C X 3 1/2 THREAD STEEL, GALV. PER SPEC P119-11	
35		Would it be acceptable to furnish and install a European bronze 55 contact wire that will meet the ASTM B9 requirement?	European bronze alloy 55 contact wire is acceptable if it meets all of the requirements of ASTM B9. All material must meet or exceed the requirements specified and the contractor shall provide certified test reports in lieu of witnessed tests by a representative of the Amtrak Project Manager.
36		Drawing ET-2 (Sheet 267) Note 3 states that an approved equal is acceptable for manufactured items. What will be the process to receive Amtrak's approval for catenary items by other manufacturers that do not appear on the bill of materials?	Submit an RFI with cut sheet for proposed component and specify which component it is an alternate for. All material must meet or exceed the requirements specified and the contractor shall provide certified test reports in lieu of witnessed tests by a representative of the Amtrak Project Manager.
37		Drawing SG-06 shows 4 track circuit connections (1TBX/1TNX, 1RBX/1RNX, 5TBX/5TNX, and 5RBX/5RNX) but drawing SG-02 shows 5 stub-ups for track circuit connections. Is there an additional track circuit connection which is not shown on SG-06?	The stub-up show at approx. Station 600+90 is not required and should not be installed. The two track circuits or 4 track circuit connections as shown on SG-06 are correct.

#	SPEC SECTION	QUESTIONS	RESPONSES
38		We request that additional time be granted to submit questions as some of our vendors are still reviewing the plans and specifications.	Deadline for questions was extended 3 weeks to 8/16/11.
39		The drawing “E-04” one-line riser shows feeder from 480V Switchgear to panel “MP1” as 4-500KCMIL and 1 #3 in 4” conduit while drawing “EB-03” shows feeder as 4-#1/0 & 1 #6 in 2” PVC conduit, please clarify.	On Drawing E-04, please note feeder to panel "MP1" as a (4) 1C#1/0 & #6G in 2" conduit. Revised Drawing will be issued.
40		Specs. call for a standing seam metal roof. Will a ribbed steel roof be acceptable?	Ribbed Steel is acceptable as long as it meets the spec requirements
41		What type of frame do you prefer? It’s not specified. Outrigger or perimeter ?	Perimeter
42		Will Vinyl Covered Gypsum (VCG) be an acceptable alternative to painted drywall?	No
43		Will Oak Cabinets be an acceptable alternative to plastic laminate covered cabinets?	Yes. Specifications will be modified to allow solid oak cabinets
44		Do exterior doors require lights/view panels?	No
45		Specs. discuss the “Main power distribution panel board” but do not address the sub-panel(s). Please clarify if single or three phase sub-panels are required. If three phase is needed, what should be used for the HVA units and water heater (single or three phase)?	If this question relates to the panels for the buildings, both MP1 and PP1 are shown on the drawings and the panel board for the trailer is described in spec section 13100.
46		Please confirm lights are to have parabolic lenses (called out in specs.) and not diffused lenses.	Correct
47		Are lockers and benches to be included in our SOW? If yes, what are the specs.?	Yes the lockers are in the scope of work. Specifications for the lockers will be added. The bench is furniture and NIC..
48		Is the “work counter” included in our SOW? If yes, what are the specs.?	Yes the work counter is in the scope of work. Specifications for the counter will be added.
49		This bid Item 38 description is for “8-Inch Water Meter and Vault”; however all other indications are for a “6-Inch Meter”. Please advise.	The bid item shall be "6-inch water meter and vault". Bid item will be corrected via addendum.
50		We cannot find a Specification for Drilled Caissons. Dwgs 172 & 173 et.al.	The Specifications for Drilled Caissons will be added.
51		We cannot find a Specification for Anchor Rods-Straight. Dwg 179 1 ½” diameter x 3’-2” long 56 Required	The text will be revised from "Anchor Rod" to "Anchor Bolt" on Sheet 179. For specifications, Refer to "General Structure Note" on Sheet 173.
52		We cannot find a Specification nor design for Plexi-glass walls. Only note on Dwg 173 re: Shop Drawings and correction thereto.	The Specifications and "Note to the Contractor" for Plexiglass will be provided in "General Structure Note" on Sheet 173.
53	02315, Line Item 9 (Class 1 Excavation	Please provide us a specification for line item 9 (Class 1 Excavation) unless we assume this item is the same as specification 02315-3.02 (Excavation).	Item No. 9 has been renamed to match Specification 02315
54		Please advise if removal of spoil materials from pile auger is included on line item 10 (Offsite Disposal of Excess Excavation).	Removal of spoil material shall be incidental to the pertinent soldier pile retaing wall item

#	SPEC SECTION	QUESTIONS	RESPONSES
55	Section 02530	The grinder pump model DH272 is a packaged system that includes a fiberglass tank. However, contract drawing 61 of 264 specifies a concrete structure. Please advise which is correct.	The details shown on drawing 61 of 264 is correct. See Addendum 4 for updated sanitary structure schedule and revised specifications.
56		**SP-1081 A** - There is a spec for 24 foot heaters with split wattages for switch track #15/10; **Drawings Sheet 244** - Shows #8 and # 10 switches to be 16 foot heaters with split wattages, and ballast heaters of 3150 watts; **Drawings Sheet 246** - Shows T.O. 8/10 to be 16 foot heaters with same wattage full length; T.O. 15 to be 24 foot heaters with same wattage full length; and T.O. 20 to be 37 foot heaters with same wattage full length; **Drawings Sheet 247** - Shows switches #16, #25, #34, #35, and #36 all to be 16 foot heaters with same wattage full length; and shows (5) circuits.	There are no moveable point frogs in this yard. Specification Section 16600 is written for #10 and #15 switches and will be revised to reflect turnout sizes as #8 and #10 so wattages reflect those under Drawing TP-11 (Sheet 246) for #8 / #10 Turnout. Drawing TP-12 will also be revised to reflect Switches SW16, SW25 and SW36 (Future) as #10 and Switches SW34 (Future) and SW35 (Future) as #8.
57		How many of which heaters are required, of which specs, for which switches?	See response to Comment #56
58		Are heaters needed for switches only, or for switches and ballast?	Switch Heaters consist of both switch heaters (Cal Rods) and Pan heaters (ballast).
59		How many controls, and for which heaters?	Drawings TP-8 indicates that the control cabinet can hold 8 module, but only 2 are required with this contract. At the top of each module on Dwg. TP-7 is listed what switch the module is intended to supply.
60		The Notice to Contractors states that the MDOT Forms A and B are to be submitted with the bid or be deemed non-responsive. The Notice to Contractors has no information on Forms C and D but at the top of each page states Forms C and D are for Bids only . Does these forms get submitted with the bid as well? Please clarify.	No. MDOT DBE Form C & D are submitted only by the vendor the contract is awarded; however if you want to submit Forms A - D with your bid that will be alright.
61		Along with the Insurance Worksheet are we to submit a Certificate of Insurance with our bid?	No. This contract is covered under MTA's Owner Controlled Insurance Program (OCIP). See page NTC 6 of 7 #17.
62		The Price Schedule for Item 126, Section 05665 Bonded Insulated Joints shows a quantity of 1ea. On the Track Chart, I have counted three bonded insulated joints. Please confirm that the correct quantity is three and please revise the Price Schedule.	Item 126 quantity has been revised to 3 EA.
63		Please provide the specification for Type B Ballast Curb. The specification 02770 does not include this item	The specification was edited to include Type B Ballast Curb
64		Please provide the depth for the W6x9 Galvanized Steel Post to be installed for the Type B Ballast Curve.	The Galvanized Steel Post Sections shall be 6' long
65		Item 114: Please provide rebar drawing for transition slab.	Reinforcing steel has been provided on this sheet.

#	SPEC SECTION	QUESTIONS	RESPONSES
66		Sheet No.139 and Sheet No. 171 show conflicting dimensions for item 115. Please confirm the width of structure slab is 10'-3" as shown on Sheet No.139, not 8'-9" as shown on Sheet No. 171.	Dimension should be 10'-3" on Sheet No 171
67		Drawing No. PP-01 note 1 shows the “Contractor shall procure, store, rail, ties…" Is Bid item 98, Ballast Procurement, for this area?	Yes
68		Can the deadline for questions be extended by two weeks?	Deadline for questions was extended 3 weeks to 8/16/11.
69	Section 05120-4 (D) Structural Steel	The qualifications require AISC certification for Standard Buildings to do this work. Clark Machine Corp is certified under AISC “Standard Buildings, Simple Bridges and Manufactured Bridge Components” However, in section 13601-7 (B), “Metal Inspection Platform” the qualifications require AISC certification for “Major Bridges” and a member of MBMA (Metal Building Manufacturers Association). Can you tell me what applies here since Section 05120-1, 1.01,B (4) refers to "Metal Inspection Platform"?	There is no Section 13601 - 7 (B) in the Specifications Booklet. However, there is a Section 13601-1.07 (B), Page SP-646 where AISC Certification for Category MB means for Metal Building not Major Bridges. This certification is required as per Section 13601-1.07 B. There is no Section 05120-4(D). Please clarify.
70		We would request that Jinpan International be considered and specified as an acceptable manufacturer. If you could let me know who the contact is at Gannett Fleming, I could further this discussion with them. Please be aware that GE, Siemens, Eaton Cutler Hammer, and Square D do NOT make cast coil transformers. Attached is information on Jinpan International for your review. I am available to provide any further information required.	While GE, Square D, ABB, Siemens and Eaton do not make Cast Coil transformers themselves, they do supply them under their own nameplates, quality control and warranties. Alternate Manufacturers, other than those listed in Specification 16275, may be evaluated under the submittal review process after Contract Award.
71		We would request that PACS Industries be considered and specified as an acceptable manufacturer. I know that Gannett Fleming is already familiar with PACS through several SEPTA projects in Philadelphia	PACS will be considered as an "Approved Equal" at time of submittals
72		Specification 16340 Medium Voltage Switching and Protection Assemblies Section 1.03B states that all major components shall be of the same manufacture as the switchgear. This precludes all major OEM’s that specialize in transit work from bidding. PACS has the availability to build with Square D, GE, Siemens, Areva, Hyundai, or Eaton breakers. The specified manufacturer, Square D, does not build power control centers (MV houses) and would also have to take exception to this specification section. Exception is requested to this specification line item.	Section 16340 - The intent is to have single responsibility for the 15 KV Load Interrupter Switches, components and enclosure. We concur with Contractor's question and alternate OEM's will be considered for approval during the Contractor's submittal process.

#	SPEC SECTION	QUESTIONS	RESPONSES
73		Specification 16341 Medium Voltage Metal Clad Switchgear Section 1.03E states that all design and product test data be approved before fabrication. What specific design tests are required? On other recent transit projects, job specific KEMA testing including short circuit, withstand, circuit breaker interrupting, etc. have been required specific to the project. Will representative test data for these tests be acceptable on this project?	Referenced Specification Section 16341, 1.03E refers to Test Report submittal requirements. Refer to Article 3.02 for required switchgear testing. Switchgear design must successfully pass all applicable IEEE C37.20.2 Design Tests as noted in Artical 3.02.B. Certified Test Reports of similarly designed assemblies may be submitted by the Manufacture for owner review. Per Article 3.02.C., all IEEE C37.20.2 Production Tests shall be performed on the switchgear.
74		Specification 16341 Medium Voltage Metal Clad Switchgear Section 1.05A state that the circuit breakers shall be of the same manufacture as the switchgear. See item#2 above. Exception to this specification line item is requested.	See response to comment #72
75		Will CSX allow excavation within the 25' construction easement to the Southeast of Retaining Wall C to assist in the construction of Wall C, as long as the excavation does not encroach on the Live Load Influence Zone referenced in Section 01150-1.03-A-1.-a.-2)-b.) of the contract specifications?	No
76		For Item 103, Type B Ballast Curb, Specification Section 02770 "Concrete Curbs" is referenced, which explains construction techniques to be used for either cast-in-place or slip formed curb. The contract drawings reference MTA Standard Number C-001220-03 "Ballast Curb Details" which calls for 8' long segments of pre-cast concrete curb to be locked together using small galvanized W-shape posts. Should the contractor reference specification 03400 "Precast Concrete" in lieu of specification 03300 "Cast-in-Place Concrete" for the precast curb sections?	Yes
77	Liability Insurance Requirements, page 3 of 28	Builder's Risk Insurance, states the limits are to be determined, but 1.3.1 states the limit will be no less than 100% of the replacement value of the Project. Please provide the builders risk limit of insurance.	The loss limit (total liability per occurrence) is $50,000,000.
78	Liability Insurance Requirements 1.3.1	states the builders' risk insurance will include coverage for off-site storage and in-transit but the sublimits for these coverages are not identified. Please provide the in off-site storage and in-transit sublimits which will be provided?	Offsite temporary storage per ocurrence limit is $1,000,000. Inland transit limit is $500,000.
79	Liability Insurance Requirements 1.3.1	states the builders' risk insurance will include coverage for expenses due to delays in completion but does not identify the types and amounts of expenses covered. Please list the types and amounts of expenses which would be covered as delay in completion costs.	This coverage is not provided on a blanket basis inside the OCIP builder's risk program. It can be added on a project by project basis, if the need is determined by the MTA.

#	SPEC SECTION	QUESTIONS	RESPONSES
80	Liability Insurance Requirements 1.3.1	states the builders' risk insurance will include sublimits for losses due to earthquake (including sinkhole) and flood. Please provide the sublimits of insurance which will apply to earthquake, sinkhole and flood.	Earthquake and flood (depending on flood zone) limits are each $50,000,000.
81	Liability Insurance Requirements, page 3 of 28	Commercial General Liability states the OCIP will provide 5 years of Completed Operations Coverage but 1.3.2 (b) states the Commercial General Liability will have 3 years of Completed Operations Coverage. Please clarify the number of years of Completed Operations which will be provided by the OCIP.	The OCIP will provide 10 years completed operations.
82	Liability Insurance Requirements, page 3 of 28	Excess Liability states the OCIP will provide $50 million in Excess Liability limits but 1.3.2 (c) states the Excess Liability limits will be $25 million. Please clarify the amount of Excess Liability limits which will be provided by the OCIP.	Excess liability inside the OCIP will be $50,000,000.
83	Liability Insurance Requirements 1.3.3	states if the MTA terminates or modifies the OCIP, the Contractor shall provide the coverage no longer furnished and the MTA will reimburse the actual cost of such alternative insurance, which was originally identified in the bid documents. Insurance premium rates normally increase over time. Will the MTA allow for incremental increases in premium rates as stated in other parts of the specifications such as SGP – 4.03?	Insurance rates both increase and decrease depending on market conditions. I am not familier with SGP - 4.03. If the contractor(s) are also willing to reduce the alternate insurance cost should rates be lower if the MTA terminates or modifies then I don't see this being an issue.
84	Specification Section 17313 1.05A	states that a copy of the steel fabricator's AISC Category I certificate and proof of prior work with Amtrak must be submitted with the bid. Is this correct? Is there specific information required that would serve as proof of prior experience manufacturing steel for Amtrak?	Yes, this is correct. Submit a list of recent projects fabricated for Amtrak.
85	Specification Section 17125 3.01B	makes reference to hand throw layouts that are to be removed and delivered to the MTA. Is this correct? Where are these existing hand throw switches located?	There are no existing hand throw switches. This requirement will be removed from this section
86	Specification Section 17273 4.02	states that "payment for recommended spare parts will be made at the Contractor quoted price per unit as part of the lump sum price for Mandatory Spares." Does this mean that the cost of the recommended spares (up to $10,000) should be included in our bid price?	Yes
87	Specification Section 01150 1.03A.3 (page SP-32) AND 1.03b.6 (page SP-33)	state that the MTA will pay CSXT and Amtrak, respectively, for flagging, but the amount of hours of flagging is to be capped. What is the capped amount? Can the contractor reasonably assume that there will be sufficient flagging hours available to complete this project within the time allotted?	3400 Hours
88	Drawings OCS-10 and OCS-15	Some of the crossbeams are nearly 60 feet long. Would splicing of beams be allowed, in order to facilitate transportation and installation of structural steel?	Yes, it could be allowed. Submit alternatives to the design drawings via an RFI on a case by case basis

#	SPEC SECTION	QUESTIONS	RESPONSES
89		On the bid form, Item 170 calls for a unit price for the Medium Voltage Switching and Protection Assemblies. This should be included in Item 173, Medium Voltage Metal Clad Switchgear. Why is Item 170 a separate bid item? It is difficult to break out the pricing in this manner. Furthermore, there are separate bid items for the Medium Voltage Switching and Protection Assembly Ground Grid (Item 171) and Medium Voltage Switching and Protection Assembly Concrete Pad (Item 172). The 15kV switchgear has only one concrete pad and ground grid, so these items should be included in Items 174 (Medium Voltage Metal Clad Switchgear Ground Grid) and 175 (Medium Voltage Metal Clad Switchgear Concrete Pad).	Item 170 has been deleted and included with item 173. Items 171 and 172 are for the 480V switchgear shown on drawing E-11. Items 174 and 175 are the 15KV switchgear shown on drawing E-05.
90	Drawing E-01	the 15kV aerial cables are marked “Not in Contract.” Please confirm that the 15kV feeders from the 15kV switchgear to the 480V switchgear is by others.	No.
91		Will PEPCO install 15kV service inside the new 15kV switchgear enclosure or is the Contractor responsible for extending service from the existing PEPCO pole?	The contractor is responsible for extending the service from the PEPCO pole. PEPCO will install the primary cables, but any structures on private property are the responsibility of the Contractor.
92	Bid Form, Item 141	On the Bid Form, item 141, is the quantity of ground rods supposed to be the total of all ground rods on the project? Please clarify.	Item 141 is for the ground rods for the High Mast Light Structures only. The ground rods associated with Ground Grid items will be considered incidental to the price of the associated ground grid.
93		On the Bid form, please clarify where bid item 142 is used on the drawings?	Bid Item 142 has been revised
94	Drawing E-03	there are feeder conduits from the lighting contactors for the inspection pits to panels “RP & LP” at the 480V switchgear, these conduits are detailed on drawing “E-06”as direct buried 2” schedule 40 PVC, please clarify in which bid item this work is to be carried in.	The conduits has been revised to a 2" sch 80 PVC and are included in Bid item 150.
95	Drawing E-06	Inspection Pit Lighting Control Diagram, the notes clearly state that the incoming branch circuits and lighting branch circuits shall be #10 wire with #12 wire ground, therefore there will be considerably more #10 wire than the 140 LF shown for Bid Item 161. Please clarify.	Bit item 161 is for the pantograph inspection platform (See dwg. E-09). The inspection pit lighting wire will be paid for under item 158.

#	SPEC SECTION	QUESTIONS	RESPONSES
96	Special Provisions, Section 02315	repeatedly refers to the Removal of Unsuitable Material and Selected Backfill for fat clays and other unsuitable soil encountered during excavation operations. However, under Part 4: Measurement and Payment, it appears this work would be paid under its own respective items (which do not exist for this contract), and is not incidental to the contract unit price indicated under “4.01 Excavation.” Will this work be paid under the Class 1 Excavation bid item at the same contract unit price per cubic yard (Item 9) or would this work be considered a change in existing conditions?	New items "Removal of Unsuitable Material (Contingent)" and "Select Backfill (Contingent)"has been added to the project. Disposal of unsuitable material will be considered incidental to the removal.
97		Bid Item #2, Section 01210 Miscellaneous Work Allowance – This item has no bid amount. Please advise what Contractors should bid this item at?	A allowance amount has been added to the Contact
98		The table on Page SGP-20 indicate 24 weather days as the basis for which time extensions will be granted. The table on page SP-44 indicate 46 weather days as the basis for which time extensions will be granted. Please confirm which table governs?	The tabler on SP-44 is correct and supersedes the table on SGP-20
99		Multiple electrical dwgs. (E-01, 04 & 06) show 15kV cable between the Pepco substation/15KV switchgear and 15KV switchgear/480V switchgear. There are a number of references to this cable being by Pepco and NIC. 35KV cable is not a line item on the Bid Form. Also, a spec has not been provided for 15KV cable. As such, we expect that 15KV is provided by others and is not to be included in our bid price. Please confirm. If we are to provide 15KV cable, please provide scope of 15KV cable to be provided and where it should be included on the Bid Form.	15 KV cable will be by others.
100		Det. A on dwg. E-06 shows 4-5” PVC-80 concrete encased conduits for Pepco primary service. This ductbank configuration is not shown on the Bid Form. Please confirm where this work should be included on the Bid Form.	Conduits have been revised to 4-5" fiberglass conduits.
101		1. Switchgear Layout Plan on dwg. TP-17 shows 4-4” and 2 sets of 2-4” concrete encased PVC-40 conduits for Pepco primary service between the service pole and the 15KV substation primary switches. These ductbank configurations are not shown on the Bid Form. Please confirm where this work should be included on the Bid Form.	The 4-4" has been revised to 4-5" in new item 142A, and the 2-4" has been revised to 2-5" on the drawing.

#	SPEC SECTION	QUESTIONS	RESPONSES
102		Det. 1 on dwg. E-01 shows 4-5” concrete encased PVC-80 conduits for Pepco primary service between the service poles and the 15KV switchgear. Switchgear Layout Plan on dwg. TP-17 shows 4-4” concrete encased PVC-40 conduits for Pepco primary service between the service pole and the 15KV substation primary switches. We expect that these conduit sizes and types should be the same in both cases as the wire sizes are common. Please confirm what conduit sizes and types are required for Pepco primary service.	The conduit on TP-17 has been re-labeled to a 4-5".
103		Current Pepco specifications for 15KV primary service conduit requires 5” fiberglass conduit. However, the Contract documents show 4” and 5” PVC-40 and 80 conduit. Please confirm what conduit type and size is required for Pepco primary service.	See response to question 105.
104	Contract Agreement page C 1 of 2 & Specification Section GP-8.04 (a)	We have been looking all over for the Duration of the Project, and for the prescribed Liquidated Damages, but the only reference to time of completion that we can find is here in the Progress Schedule section. Is the Contractor to decide the completion date or does the Authority have one in mind?	The Completion Time and Liquidated Damages are shown on pg SP-3.
NO #	Appendix "E" AMTRAK Sketch 1 Specification 02261A - Rev 1	A significant portion of the excavation limits for the utility and drainage construction lie within Zones 2 and 3 of the AMTRAK defined excavation zones (See AMTRAK Sketch 1 Spec. 02261A-Rev 1 included in Appendix ‘E’). As installation of the various pipe systems proceeds, overlapping Type 2 and 3 Zones occur. In the interest of providing constructible pipe systems in these areas, request is made to modify the Support of Excavation Standard Detail as follows:	See below
105	Appendix "E" AMTRAK Sketch 1 Specification 02261A - Rev 1	Zone 3 Condition – Where trenches overlap, zone 3 permanent sheeting can be cut off 1 ft below the upper trench pipe invert. (This condition occurs at the 30” Storm Drain overlapping the Grinder Pump Excavation).	Contractor shall submit shop drawings for the permanent sheeting design. The shop drawings will be reviewed and approved on a case by case basis.
106	Appendix "E" AMTRAK Sketch 1 Specification 02261A - Rev 1	Zone 2 Condition – Where trenches overlap, allow widening of the shoring system to incorporate both of the piping systems.	This will be acceptable.
107	Appendix "E" AMTRAK Sketch 1 Specification 02261A - Rev 1	Pipe Removals- Much of the pipe removals are located within Zone 2 & 3 limits rendering the excavations for the removals to be steel sheeted. Rather than removing these lines, abandoning these lines in place by filling of these lines with flowable fill will be more economical.	This will be acceptable if the abandoned pipes will not conflict with proposed construction.

#	SPEC SECTION	QUESTIONS	RESPONSES
108	Bid Form, Item #170	Bid Item #170- Medium Voltage Switching and Protection Assemblies- What is the scope of this bid Item?	See answer to No. 92.
109	Bid Form, Item #173	Bid Item #173- Low Voltage Draw-out Metal Enclosed Switch Gear- 480V- Is the Bid Quantity of 1 correct?	Yes.
110	Bid Form, Item #167	Bid Item #167- Substation Transformers- Is the Bid Quantity of 2 correct?	Yes.
111	Bid Form, Item #170	Bid Item #170- Medium Voltage Switching and protection Assemblies- What is the scope of this bid Item?	See answer to No. 92.
112		Could you please clarify where the excavation for the soldier pile retaining walls is to be paid?	Payment for excavation for the soldier pile will be considered incidental to the pertinent retaining wall item
113	Bid Form, Item # 204	Is Temporary Wood Pole Removal. It is unclear in the plans which poles need to be removed. Which poles are these?	The Temporary wood poles are shown on Dwg ET-7 & ET-8 and are labeled T.W.P #
114	Specification Section 16275	Calls for Cast Coil Design Transformers. Would a dry-type transformer be an acceptable alternate, if it were to meet or exceed the requirements of the specifications?	No.
115	Bid Form, Item #2	This Item 2 Miscellaneous Work Allowance would seem to require a dollar amount entered by the Authority. There is no way for the Contractors to anticipate the amount of Miscellaneous work that might be involved. And suppose a Contractor bid a very low number to make himself competitive; the Authority would run out of money for the item. Please consider a dollar amount for this Allowance.	Fixed pricing for item 2 has been inserted
116	Bid Form, Item #3 & Specification Section 01450, 4.01 B	Although this Unit is ALL; we are not sure if that is the correct classification. The word 'Allowance' does not appear hear, and There is no Allowance Price or Amount shown. Despite that this says "…paid as an allowance…"	A allowance amount has been added to the Contract and will be as an allowance on an earned daily basis for each day the Contractor successfully performs all requirements of the approved CQC Plan
117	Specification Section 01450, 4.01 A	Furthermore this says “The Bid Price for Quality Assurance and Quality Control shall be divided by the total number of calendar days of Contract duration”. So it’s not an allowance per se, but a Lump Sum Bid Price. Please clear up this nomenclature for us.	"The bid price" has been revised to read "The allowance"
118	Specification Section 01150, 1.03 A.3 & 1.03 B.6	Have you decided on the number of hours to be inserted here, And here?	The hours have been inserted

#	SPEC SECTION	QUESTIONS	RESPONSES
119	Specification Section 01150 1.03 B.8	What are the qualifications, restrictions and expense of an "Amtrak Temporary Permit to Enter"? On some prior projects where Amtrak was the owner, and either leasing to another railroad or using the property themselves, Amtrak has required rigorous and extensive methods of locating utilities and underground structures on their property. For example, the first 5' of trench excavation must be hand dug. Is this expected to be a requirement by Amtrak for this project or has it been waived? Please advise the Permit requirements in detail.	Requests for Temporary Permit to Enter Upon Property information shall be directed to Director Project Initiation & Development, National Railroad Passenger Corporation, 30th Street Station, Mail Box 64, Philadelphia, PA 19104-2817; initial contact can be made to Ms. Kate McGrath 215-349-1750
120		Items 2 and 3 on the DIVISION OF WORK & MATERIAL SUPPLY table on sheet 267 show that the contractor is to supply material and fabrication but Amtrak is to supply erection and labor. Will Amtrak supply their own concrete, casing, rebar etc. for the foundations and down guy anchors they are to install?	Yes
121		1. On drawing OCS-2, Structural Steel Note 15 says to provide 25% more nuts, bolts and washers than required for connections. Specification 17313 3.02N and 17314 3.02N state that Contractor shall provide spare nuts and washers in the amount of 2% of the amount installed of each size. Which is correct?	The contractor is to supply 25% for the items supplied by contractor but installed by Amtrak and 2% for the items supplied and installed by contractor.
122	Specification Section 17125	The TS-4500 switch machine manufactured by Global Rail Systems is frequently referred to throughout the plans. However, the TS-4500 does not meet all of the requirements of Specification section 17125. Would the following deviations be acceptable? If not, the TS-4500 cannot be used on the project.	Contract drawings and specifications state use of the TS-4500 or approved equal. This requirement sets the standard for the machine requirements and its functions. Any supplier must meet all requirements of the Global Rail TS-4500 machine for approval.
123	Specification Section 17125	a. Section 2.01B.2 states that the switch machine "shall come with built-in hydraulic pressure sensors to remove power from the switch motor under overloading conditions or approved equal." The TS-4500 does not use pressure switches to remove power from the switch motor under an overload condition. The TS-4500 uses built-in proximity sensors to remove power from the switch motor under overload conditions. Use of the MOW push-button will disconnect power from the switch machine and allow the switch machine to be operational only by the hand pump	Contract drawings and specifications state use of the TS-4500 or approved equal. This requirement sets the standard for the machine requirements and its functions. Any supplier must meet all requirements of the Global Rail TS-4500 machine for approval.

#	SPEC SECTION	QUESTIONS	RESPONSES
124	Specification Section 17125	b. In reference to 2.01B.4, the TS-4500, while equipped with a hydraulic hand pump mechanism for manual operation, in the hand pump mode, does not disconnect the power source from the switch motor. The TS-4500 disables the hydraulic control through the system processor and use of hydraulic valves.	This would be acceptable
125	Specification Section 17125	c. In reference to 2.01B.5, the Global Rail Systems connecting rod from the TS-4500 to the No. 1 “Insulated” switch rod is not insulated.	The rod (w/ Basket) needs to be insulated between the rails to prevent a track circuit from shorting.
126	Specification Section 17125	d. In reference to 2.01B.6b, the cover of the TS-4500 is a 2-piece unit as shown on drawing SG-15, Sheet No. 231 of 264.	This would be acceptable
127	Specification Section 17161	Section 1.04B calls for AREMA type binding posts or barrier strips. However, drawing SG-14 shows WAGO terminals for wire terminations. Connections to the rails will be through AAR 2 post terminal blocks and specified lightning protection.	AAR Binding posts or AREMA approved Wago bocks are acceptable
128	Specification Section 17161	Section 2.02A specifies 12 gauge hot dipped galvanized steel. However, on drawing SG-16 Item 1 in the “Description” box lists the case as 0.10 aluminum.	Drawing SG-16 will be revised to reflect 12 gauge hot dipped galvanized steel

ADDENDUM NO.: 4
DATE: 09/14/11
CONTRACT NO.: T-0208-0140

The following additions, deletions, and modifications are hereby made a part of the Contract Documents of MARC Wedge Storage Yard At Union Station, Contract No.: T-0208-0140.

Item No.	Page	Modification
I. CONTRACT SPECIFICATIONS		
1	Notice to Contractors Page NTC 2 of 7	Revised bid opening date to: September 30, 2011
2	Bid Form Page BF-1	Revised bid opening date to: September 30, 2011
3	Bid Form Page BF-4	Added a allowance price for items 2 & 3
4	Bid Form Page BF-4	Renamed Item No. 4
5	Bid Form/Throughout	Revised description for Items No. 4, 9, 10 & 38
6	Bid Form Page BF-12	Revised Unit for Item No. 82
7	Bid Form Page BF-16	Modified Quantity for Item 126
8	Bid Form/Throughout	Deleted Items 142 & 170
9	Bid Form Page BF-24	Added Items 209 to 213
10	Bid Form Page BF-25	Added 8” Backflow Preventer Assembly
11	Section 01150/SP-19	Removed flagman protection from 1.02.B.13
12	Section 01150/SP-32	Inserted Hours in 1.03.A.3
13	Section 01150/SP-33	Inserted Hours in 1.03.B.6
14	Section 01300/SP-60	Added new Section 1.13 As-Built Drawings
15	Section 01450/SP-77	Replaced “bid price” with “allowance” in 4.01.A
16	Section 01500/SP-84 & 85	Modified 1.11 to remove the color yellow requirement
17	Section 01523/ SP-88 to SP-94	Modified Sections 3.01.E.16, 21,23, & 3.01.G
18	Section 02465	Inserted new specification
19	Section 02510 SP-151	Add 2.01 J 8-inch Backflow Preventer Assembly.
20	Section 02510 SP-162	Add 3.15 8-inch Backflow Preventer Assembly.
21	Section 02510 SP-165B	Add 4.16 8-inch Backflow Preventer Assembly and Vault.
22	Section 02530 SP-169	Update 2.01M Grinder Pump
23	Section 02530 SP-173	Update 3.08 Grinder Pump
24	Section 02530 SP-175	Update 4.04 Grinder Pump

25	Section 02630 SP-205	Update 4.10 30-inch RCP pipe Class V
26	Section 02770/SP-279	Modified Section 3.04.A
27	Section 02770/SP-281	Modified Section 4.01
28	Section 08330/SP-570	Modified 2.01.A.1.a, 2.01.A.2, 2.02F & 2.02.G
29	Section 08330/SP-571	Modified 2.02.J & 2.02.L
30	Section 13100/SP-592	Modified 2.02.C.2
31	Section 13100/SP-592	Added 2.02.D “Work Counter” & 2.02.E “Lockers”
32	Section 13601/SP-667 to 6669	Deleted former Section 3.07 & 3.08 E & F
33	Section 16116/Throughout	Added provisions for 4-5” Fiberglass Conduits
34	Section 16116/SP-927	Modified Section 4.10 to replace 10-4”Sch 80 PVC with 4-5” Fiberglass Conduits
35	Section 16116/SP-927	Modified Section 4.11 from Sch 80 to Sch 40 PVC
36	Section 16116/SP	Added Section 4.12
37	Section 16340	Modified Section 4.01
38	Section 16341	Modified Section 4.01
39	Section 16600/SP1080 & 1081	Modified Section 1.05
40	Section 17125/SP-1115	Deleted 3.01.B
41	Appendix E	Added Amtrak specification
II. CONTRACT DRAWINGS		
1	U-03	Relocate a section of sanitary line
2	U-04	Relocate a section of sanitary line. Relocate an oily stormwater manhole. Add 8” backflow preventer.
3	U-05	Update sanitary line on cross section.
4	U-07	Relocate sanitary line between SMH-6 and DP-2.
5	U-08	Relocate sanitary line between SMH-6 and DP-2.
6	U-10	Update sanitary profile due to the relocation of sanitary line between SMH-6 and DP-2.
7	U-11	Update sanitary schedule due to the relocation of sanitary line between SMH-6 and DP-2.
8	U-15	Update water line notes.
9	U-16	Update water line notes.
10	U-17	Add 8” backflow preventer, update water line notes.
11	U-18	Update water line profile.
12	U-20	Update water line structure schedule, move water gate valve and box details from sheet U-21.
	U-21	Delete all water line details. Add details for 8” backflow preventer vault.
13	U-21A	Update water meter top of manhole cover elevations. Update notes.

14	DR-21	Relocate oily storm water manhole OMH-3.
15	DR-22	Update oily storm water profile and schedule due to the relocation of OMH-3.
16	SWM-14	Update stormfilter computations.
17	SWM-15	Change number of cartridges use in the stormfilter at SP #1 to 8.
18	SWM-17	Change number of cartridges used in SF-1 to 8.
19	ES-03	Update details for TGOS, Tie-in earth dike detail for TGOS, BIP, and AB.
20	S-31	Revised Track Section ‘B’
	S-31	Added rebar to transition slab
21	IP-01	Revision of general structural notes
22	IP-02	Removal of dimensions and text
23	IP-07	Anchor rod to anchor bolt and 14” to 16” anchor plate
24		
25	E-01	Revised 4-5” PVC Conduits to 4-5” Fiberglass Conduits
26	E-04	Added Amtrak heater case
27	E-06	Revised note on Detail A
28	A-01	Added Water Fountain
29	A-01	Added “NIC” to Bench note
30	A-01	Added spec on lockers
31	A-01	Added Fire Extinguishers
32	A-01	Reversed the door swings to rooms “Computers” and “Files”
33	A-01	Moved and reversed the door swing to the main entry door.
34	A-03	Revised ramp and building section
35	A-04	Added roof/covering to ramp.
36	GN-01	Revised typical slab on grade details
37	SG-02	Revised Signal Equipment (By Amtrak)
38	SG-16	Revised description of Signal Case
39	TP-2	Added switch heater facilities by Amtrak
40	TP-3	Added conduits and pull boxes for Amtrak switch heaters
41	TP-4	Added conduits for Amtrak switch heaters
42	TP-5	Deleted note 2
43	TP-8	Revised to show future modules
44	TP-9	Revised notes 2, 3, and cable size
45	TP-11	Deleted details 2503 and 2504
46	TP-12	Revised size/type of switches
47	TP-17	Added note 6, deleted dimensions, changed title
48	TP-18	Revised A and B dimension

4. BID DUE DATE & TIME

Sealed Bids addressed to the Maryland Transit Administration, Procurement Division, 6 St. Paul Street, Baltimore, Maryland 21202-1614, and marked **"Bid for Contract No. T-0208-0140, MARC Wedge Storage Yard At Union Station"**, will be received at the above address until but not after 2:00 P.M. local time, **September 30, 2011**. At that time, the Bids will be publicly opened and read aloud in Conference Room #742 at the same address. Hand delivered bids should be deposited in the Bid Box located on the 7th Floor before the 2:00 P.M. deadline. Any bids received after the date and time specified shall not be considered.

5. ELECTRONIC VERSION OF BID DOCUMENTS

The bid documents will be available by electronic means. The Bidder acknowledges and accepts full responsibility to ensure that the Bidder has made no changes to the Administration's bid documents. In the event of a conflict between the versions of the bid documents in the bidder's possession and the version maintained by the Procurement Officer, the version maintained by the Procurement Officer shall govern.

6. AVAILABILITY OF DOCUMENTS

Specifications may be downloaded from the MTA web site. Bidders will be required to register the first time specifications are downloaded and a login number will be assigned. This number should be used every time the bidder downloads the documents for this contract. Bidders must supply accurate information in order to receive notice of all subsequent addenda.

TO OBTAIN THE SPECIFICATIONS:
Visit MTA's website at (www.mta.maryland.gov) , follow the links for "Doing Business with the MTA" – "To view Procurements" - "Professional & Construction/Installation Section", and download the Specifications for this procurement.

TO OBTAIN THE DRAWINGS:
E-mail Vanessa Ashe at vashe@mta.maryland.gov requesting the contract drawings and supplying the following information: the contact person, company name, mailing address, phone # and e-mail address. The drawings (CD) will be mailed to you at no cost. You also have the option of picking up the CD containing the drawings at: 6 Saint Paul Street, Baltimore, MD 21202, Wm Donald Schaefer Bldg., 7th floor.

STATE OF MARYLAND DEPARTMENT OF TRANSPORTATION
MARYLAND TRANSIT ADMINISTRATION
BID FORM
FOR
CONTRACT NO.: T-0208-0140

TO:	MARYLAND TRANSIT ADMINISTRATION	BID OPENING DATE:
ATTN:	PROCUREMENT DIVISION	**September 30, 2011**
	6 SAINT PAUL STREET, 7TH FLOOR	BID OPENING TIME:
	BALTIMORE, MD 21202-1614	**2:00 PM**

BID OF: _____
(Bidder's Name)

PROJECT DESCRIPTION:
This contract is for the construction of a MARC Layover Facility in the Washington, CD area near Ivy City. The proposed yard will be a 3 track stub-end configuration with the capacity for three additional tracks for future expansion, and will function as a mid-day layover facility for MARC electric and diesel hauled trains.

1. This bid is hereby submitted to the Maryland Transit Administration (hereinafter sometimes called the "Administration") in response to NOTICE TO CONTRACTORS dated _____ .

2. The UNDERSIGNED has thoroughly examined, acknowledges receipt of, and is familiar with the Contract Documents as well as the various instructions, information, and requirements covering the same, all as mentioned herein and in said NOTICE TO CONTRACTORS.

3. In compliance with said NOTICE TO CONTRACTORS the UNDERSIGNED hereby proposes to furnish all labor, equipment, and materials and perform all work described and in strict accordance with the provisions of the Contract Documents for the consideration of the amounts, lump sum and unit prices listed in the attached Unit Price Schedule, and agrees that, upon Notice of Award, within one hundred fifty (150) calendar days after the date of opening of bids, unless mutually extended, he will within ten (10) calendar days after receipt of the prescribed forms, execute the Contract and furnish a performance bond and payment bond (if such bonds are required by the Contract Documents) on forms furnished by the Administration with good and sufficient surety or sureties.

4. The UNDERSIGNED agrees and understands that the time of completion is as specified in the Special Provisions, unless the completion dates are extended as provided for in the Contract Documents.

5. The UNDERSIGNED agrees to pay liquidated damages in the amount specified in the Special Provisions for each and every calendar day after the completion date that the work remains incomplete unless an extension is granted as provided for in the Contract Documents.

Item	Section	Description	Estimate of Quantity	Unit	Unit Price	Total Price
1	01130	Mobilization	1	LS		
2	01210	Miscellaneous Work Allowance	1	ALL	ALL	$1,600,000
3	01450	Quality Assurance and Quality Control	1	ALL	ALL	$500,000
4	01500	Temporary Construction Fence	3,000	LF		
5	01523	Engineer's Office Type 3	1	LS		
6	01523	Motor Vehicle	30	MO		
7	01810	Commissioning	1	LS		
8	02310	Test Pit Excavation	10	CY		
9	02315	Excavation	36,747	CY		
10	02315	Disposal of Excavated Materials	34,596	CY		

Item	Section	Description	Estimate of Quantity	Unit	Unit Price	Total Price
11	02370	Stabilized Construction Entrance	150	TON		
12	02370	Rehabilitate Stabilized Construction Entrance	300	TON		
13	02370	Earth Dike	2339	LF		
14	02370	Riprap for Sediment Control	25	TON		
15	02370	Stone Outlet Structure	10	TON		
16	02370	Temporary Gabion Outlet Structure	2	EA		
17	02370	Super Silt Fence	464	LF		
18	02370	Temporary Seed	130	LB		
19	02370	Temporary Mulch	1500	SY		
20	02370	Portable Sediment Tank	4	EA		

Item	Section	Description	Estimate of Quantity	Unit	Unit Price	Total Price
21	02370	At Grade Inlet Protection	13	EA		
22	02370	Ballast Drain Inlet Protection	8	EA		
23	02370	Soil Stabilization Matting	3826	SY		
24	02370	Asphalt Berm	201	LF		
25	02488	Soldier Pile Retaining Wall A	1	LS		
26	02488	Soldier Pile Retaining Wall B	1	LS		
27	02488	Soldier Pile Retaining Wall C	1	LS		
28	02488	Soldier Pile Retaining Wall D (Ex. Wall Modifications)	1	LS		
29	02510	8-Inch D.I.P. Water Main	316	LF		
30	02510	6-Inch D.I.P. Water Main	150	LF		

Item	Section	Description	Estimate of Quantity	Unit	Unit Price	Total Price
31	02510	4-Inch D.I.P. Water Main	2210	LF		
32	02510	3/4-Inch Copper Service Pipe	115	LF		
33	02510	4-Inch Gate Valve and Box	3	EA		
34	02510	6-Inch Gate Valve and Box	4	EA		
35	02510	8-Inch Gate Valve and Box	1	EA		
36	02510	Fire Hydrant	2	EA		
37	02510	Yard Hydrant	15	EA		
38	02510	6-Inch Water Meter and Vault	1	EA		
39	02510	Concrete encasement	7	CY		
40	02510	Flowable Fill	1	CY		

Item	Section	Description	Estimate of Quantity	Unit	Unit Price	Total Price
41	02530	Grinder Pump	1	EA		
42	02530	48-inch Precast Sanitary Manhole	9	EA		
43	02530	Square Sanitary Manhole SMH-11	1	EA		
44	02530	Sanitary Environ-pans	12	EA		
45	02530	4” Sanitary Sewer Pipe (PVC)	50	LF		
46	02530	6” Sanitary Sewer Pipe (PVC)	1510	LF		
47	02530	8” Sanitary Sewer Pipe (PVC)	633	LF		
48	02530	4” vertical Sanitary Sewer Connection Pipe (PVC)	120	LF		
49	02530	1.1/4” Sanitary Forcemain and 4” Casing Pipe-Directional Boring (HDPE)	273	LF		
50	02530	8” Sanitary Sewer Pipe – Direction Boring (HDPE)	350	LF		

Item	Section	Description	Estimate of Quantity	Unit	Unit Price	Total Price
51	02530	Concrete Encasement	11	CY		
52	02620	Underdrain	2570	LF		
53	02620	8" Underdrain Outlet	20	LF		
54	02620	10" Underdrain Outlet	50	LF		
55	02620	Concrete Encasement	8	CY		
56	02630	8-inch HDPE Pipe	260	LF		
57	02630	15-inch HDPE Pipe	482	LF		
58	02630	18-inch HDPE Pipe	121	LF		
59	02630	24-inch HDPE Pipe	210	LF		
60	02630	12-inch RCP Pipe CLASS V	124	LF		

Item	Section	Description	Estimate of Quantity	Unit	Unit Price	Total Price
61	02630	15-inch RCP Pipe CLASS V	141	LF		
62	02630	18-inch RCP Pipe CLASS V	279	LF		
63	02630	24-inch RCP Pipe CLASS V	88	LF		
64	02630	30-inch RCP Pipe CLASS V	600	LF		
65	02630	38-inch by 24-inch HERCP Pipe CLASS V	50	LF		
66	02630	Removal of Existing Pipe	178	LF		
67	02630	Single Grate Catch Basin	5	EA		
68	02630	Double Grate Catch Basin	1	EA		
69	02630	Type I Ballast Drain	5	EA		
70	02630	Type II Ballast Drain	1	EA		

Item	Section	Description	Estimate of Quantity	Unit	Unit Price	Total Price
71	02630	Trench Drain	15	LF		
72	02630	Special Catch Basin	3	EA		
73	02630	8-inch Slotted Drain	1780	LF		
74	02630	48-inch Precast Manhole	7	EA		
75	02630	60-inch Precast Manhole	3	EA		
76	02630	72-inch Precast Manhole	3	EA		
77	02630	Removal of Existing Drainage Structure	3	EA		
78	02630	Modification to Existing Drainage Structure	3	EA		
79	02630	Concrete Ditch	275	SY		
80	02630	SWM Storage Structure S-1	1	EA		

Item	Section	Description	Estimate of Quantity	Unit	Unit Price	Total Price
81	02630	SWM Storage Structure S-2	1	EA		
82	02635	Railroad Spill Collection Pan	225	LF		
83	02635	Oil/water Separator	1	EA		
84	02635	48-Inch Precast Oily Stormwater Manhole	3	EA		
85	02635	Oily Stormwater Trench Drain	919	LF		
86	02635	4-Inch oily stormwater pipe (PVC)	375	LF		
87	02635	6-Inch oily stormwater pipe (PVC)	985	LF		
88	02635	8-Inch oily stormwater pipe (PVC)	70	LF		
89	02635	10-Inch oily stormwater pipe (PVC)	343	LF		
90	02635	4-Inch Vertical Oily Stormwater Connection Pipe (PVC)	105	LF		

Item	Section	Description	Estimate of Quantity	Unit	Unit Price	Total Price
91	02635	Concrete encasement	110	CY		
92	02636	Stormfilter SF-1	1	EA		
93	02636	Stormfilter SF-2	1	EA		
94	02720	6" Aggregate Base Course	5,570	SY		
95	02725	Sub-ballast	1064	CY		
96	02726	Ballast	4083	Ton		
97	02726	Geotextile Class SE	2900	SY		
98	02728	Ballast Procurement	476	Ton		
99	02745	Hot Mix Asphalt Superpave 9.5 mm , PG 64-22	537	Ton		
100	02745	Hot Mix Asphalt Superpave 25mm, PG 64-22	1,073	Ton		

Item	Section	Description	Estimate of Quantity	Unit	Unit Price	Total Price
101	02750	6" Portland Cement Concrete	1,010	SY		
102	02763	5-Inch White Waterborne Traffic Paint	260	LF		
103	02770	Type B Ballast Curb	515	LF		
104	02805	Rubberized Modular Crossing System	30	TF		
105	02806	Precast Concrete Grade Crossing System	42	TF		
106	02807	Rubberized Modular Crossing System Procurement	152	LF		
107	02820	Chain Link Fence	1,580	LF		
108	02833	Bollards	2	EA		
109	02841	Precast Concrete Wheel Stops	6	EA		
110	02890	Signs	32	SF		

Item	Section	Description	Estimate of Quantity	Unit	Unit Price	Total Price
111	02920	Furnishing and Placing Topsoil 2-inch depth	1220	SY		
112	02920	Furnishing and Placing Topsoil 4-inch depth	4100	SY		
113	02920	Turfgrass Establishment	5320	SY		
114	03300	Transition Slab	24	CY		
115	03300	Direct Fixation Track Slab	111	CY		
116	03300	Bumper Posts Slab	6	CY		
117	03300	Concrete for Light Foundation	15	CY		
118	03300	Inspection Pit Track 5	1	LS		
119	03300	Inspection Pit Track 6	1	LS		
120	03300	Retaining Wall F	1	LS		

Item	Section	Description	Estimate of Quantity	Unit	Unit Price	Total Price
121	03410	Handholes (36 x 36 x 36)	4	EA		
122	03410	Handholes (17 x 30 x 18)	1	EA		
123	03410	Manhole (6 x 6 x6)	1	EA		
124	05653	Bumping Posts	3	EA		
125	05653	Fixed Blue Flag Manual Derail	3	EA		
126	05665	Bonded Insulated Joints	3	EA		
127	05671	Ballasted Track Installation	2016	TF		
128	05673	Direct Fixation Track on Plinths	172	TF		
129	05673	Direct Fixation Track on Inspection Pits	934	TF		
130	05673	Direct Fixation Track at Bumping Posts	18	TF		

Item	Section	Description	Estimate of Quantity	Unit	Unit Price	Total Price
131	05681	Furnish and Install No. 10 Turnout	2	EA		
132	05682	No.10 RH Turnout Procurement	1	Each		
133	05683	16'-6" Split Switch Point Derail Procurement	1	Each		
134	05684	Track Switch Machine Procurement	2	Each		
135	05696	136 RE Rail Procurement	19	Ton		
136	06136	Timber Crossties Procurement	201	EA		
137	13100	Modular Office Trailer	1	LS		
138	13125	Pre-Engineered Vehicle Storage Bldg	1	LS		
139	13601	Inspection Platform	1	LS		
140	15251	General Service Compressed Air System	1	LS		

Item	Section	Description	Estimate of Quantity	Unit	Unit Price	Total Price
141	16060	Ground Rods	30	EA		
142		Not Used				
143	16116	2-5" Schedule 80 PVC Concrete Encased Conduit-Trenched	200	LF		
144	16116	3 IN. Sch. 80 PVC Conc. Encased Conduit-Trenched	1100	LF		
145	16116	Standby Power No 1 Concrete Encased Conduit-Trenched	126	LF		
146	16116	Standby Power No 2 Concrete Encased Conduit-Trenched	210	LF		
147	16116	Standby Power No 3 Concrete Encased Conduit-Trenched	43	LF		
148	16116	Standby Power No 4 Concrete Encased Conduit-Trenched	263	LF		
149	16116	Conduit PVC 80 1" Dia	2765	LF		
150	16116	Conduit PVC 80 2" Dia	3800	LF		

Item	Section	Description	Estimate of Quantity	Unit	Unit Price	Total Price
151	16116	Conduit 80 4” Dia	100	LF		
152	16120	Cables (500 MCM)	6,800	LF		
153	16120	Cables (#14)	4,200	LF		
154	16120	Ground Cable #1/0	2,100	LF		
155	16120	Cable #4, 2 KV	3,500	LF		
156	16120	Cable #4 /0	200	LF		
157	16120	Cables #6, 600V	3500	LF		
158	16122	Low Voltage Wire	1	LS		
159	16125	No. 6 AWG THHN (GREEN) GROUND WIRE	1100	LF		
160	16125	1/C No. 4 AWG THHN/THWN	2200	LF		

Item	Section	Description	Estimate of Quantity	Unit	Unit Price	Total Price
161	16125	1/C No. 10 AWG THHN/THWN	140	LF		
162	16130	Polymer Concrete Electrical Handbox	5	EA		
163	16130	1 1/2 in Rigid Gal. Steel Conduit-Attached	210	LF		
164	16130	Electrical Steel Junction Box- Attached	2	EA		
165	16142	Pit Switches	6	EA		
166	16142	Pit Receptacles	48	EA		
167	16275	Substation Transformers	2	EA		
168	16280	Standby Power Concrete Pads	6	EA		
169	16280	Standby Power Cabinets	3	EA		
170		Not Used				

Item	Section	Description	Estimate of Quantity	Unit	Unit Price	Total Price
171	16340	Medium Voltage Switching and Protection Assemblies Ground Grid	1	EA		
172	16340	Medium Voltage Switching and Protection Assemblies Concrete Pad	1	EA		
173	16341	Medium Voltage Metal Clad Switchgear	1	EA		
174	16341	Medium Voltage Metal Clad Switchgear Ground Grid	1	EA		
175	16341	Medium Voltage Metal Clad Switchgear Concrete Pad	1	EA		
176	16430	Low Voltage Drawout Metal Enclosed Switchgear	1	EA		
177	16500	Pit Lighting	48	EA		
178	16510	Pantograph Maintenance Canopy Lighting and Receptacles	1	LS		
179	16520	60 Ft. HM Round Steel Pole with 1000W Metal Halide Luminaries and Lowering Gear	5	EA		
180	16520	35 Ft. Round Steel Pole with 1000W Clear Metal Halide Floodlights	1	EA		

Item	Section	Description	Estimate of Quantity	Unit	Unit Price	Total Price
181	16600	Snowmelter Control Cabinet	1	EA		
182	16600	Switch Heaters	2	EA		
183	16600	Switch Heater Junction Box	6	EA		
184	16600	Snow Detector Controls & Sensor	2	EA		
185	17125	Track Switch Machine Layout	2	EA		
186	17126	Signal Conduit	2,063	LF		
187	17126	Concrete Encasement	24	CY		
188	17126	Signal Pullboxes	6	EA		
189	17161	Wayside Case	1	EA		
190	17211	Case and Pushbutton Foundations	2	EA		

Item	Section	Description	Estimate of Quantity	Unit	Unit Price	Total Price
191	17221	Interior and Exterior Wire and Cable	1	LS		
192	17251	Test & Inspection	1	LS		
193	17271	Manuals and Training	1	LS		
194	17273	Initial Provisioning	1	LS		
195	17305	New 2-Wire Catenary	0.78	Miles		
196	17305	OCS Switches	4	EA.		
197	17305	Key Interlocking System	1	L.S.		
198	17305	OCS Electrical Testing & Acceptance	1	L.S.		
199	17311	Catenary Pole Foundations	5	EA.		
200	17311	Catenary Drilled Pile Foundations	2	EA.		

Item	Section	Description	Estimate of Quantity	Unit	Unit Price	Total Price
201	17311	Guy Anchor Foundations	2	EA.		
202	17311	Survey and Locate all Foundations	21	EA.		
203	17313	OCS Structural Steel Support	1	L.S.		
204	17313	Temporary Wood Pole Removal	5	EA.		
205	17314	OCS Structural Steel Outside Yard Limits (Procurement Only)	1	L.S.		
206	17316	Electrification Bonding & Grounding	1	L.S.		
207	17331	Rail Bonding	2	LS		
208	18025	Safety, Security and Availability	1	LS		
209	02465	18” Diameter Caisson	32	LF		
210	02465	30” Diameter Caisson	114	LF		

Item	Section	Description	Estimate of Quantity	Unit	Unit Price	Total Price
211	02465	48” Diameter Caisson	90	LF		
212	16116	4-5” Fiberglass Conduits	40	LF		
213	16116	4-5” Schedule 40 PVC Concrete Encased Conduits	120	LF		
214	02510	8” Backflow Preventer Assembly and Vault	1	EA.		

Basis of Award: Total amount of items 001 thru 214 _____
(figures)

_____
(words)

Item	Section	Description	Estimate of Quantity	Unit	Unit Price	Total Price
215		Insurance Premium (Contingency)	LS	LS		

This amount will only be added to the base bid in the event that the bidder is excluded from the wrap-up insurance program or the program is terminated mid-term. The Insurance Premium Worksheet must be attached to the bid.

MARC WEDGE STORAGE YARD AT UNION STATION

CONTRACT NO. T-0208-0140

CONTRACT SPECIFICATIONS BOOK

TABLE OF CONTENTS

VOLUME 1

DESCRIPTION PAGE NO.

TABLE OF CONTENTS . . . . . TOC 1 - 7

SPECIAL PROVISIONS

01110 SUMMARY OF WORK. . . . . SP 1 - 5

01130 CONSTRUCTION PROCEDURES . . . . . SP 6 - 15

01150 INTERFACE REQUIREMENTS . . . . . .SP 16 - 35

01210 MISCELLANEOUS WORK ALLOWANCE . . . . . SP 36 - 38

01300 SUBMITTALS . . . . . .SP 39 - 62

01310 COORDINATION AND MEETINGS . . . . . SP 63 - 65

01450 QUALITY ASSURANCE AND QUALITY CONTROL . . . . . .SP 66 - 78

01500 TEMPORARY FACILITIES AND CONTROL . . . . . SP 79 - 85

01523 ENGINEER'S OFFICE TYPE 3. . . . . .SP 86 - 95

01570 ENVIRONMENTAL PROTECTION . . . . . SP 96 - 100

01600 PRODUCTS . . . . . SP 101 - 102

01780 CONTRACT CLOSE OUT . . . . . SP 103 - 107

01810 COMMISSIONING . . . . . SP 108 - 125

02315 EXCAVATION, BACKFILL AND COMPACTION . . . . . SP 126 - 133

02370 EROSION AND SEDIMENT CONTROL . . . . . SP 134 - 138

02465 DRILLED SHAFTS (CAISSONS) . . . . . SP 138A – 138W

02488 SOLDIER PILE WALL . . . . . SP 139 - 146

02510 WATER DISTRIBUTION SYSTEM . . . . . .SP 147 - 165

02530 SANITARY SEWER COLLECTION SYSTEM . . . . . .SP 166 – 177F

02535 HORIZONTAL DIRECTIONAL DRILLING. . . . . .SP 178 – 188

02620 SUBDRAINAGE . . . . . .SP 189 - 195

02630 STORM DRAINAGE . . . . .SP 196 - 210

02635 OILY STORMWATER COLLECTION SYSTEM. . . . . SP 211 - 226

02636 STORMWATER MANAGEMENT STORM FILTER . . . . . SP 227 - 235

02720 AGGREGATE BASE COURSE . . . . SP 236 - 239

02725 SUB-BALLAST . . . . . .SP 240 - 243

02726 BALLAST . . . . . .SP 244 - 249

02728 BALLAST PROCUREMENT. . . . . .SP 250 - 255

02745 HOT MIX ASPHALT PAVEMENT . . . . . SP 256 - 61

02750 CONCRETE PAVEMENT . . . . .SP 262 - 270

02763 PAINTED TRAFFIC LINES AND MARKINGS. . . . . SP 271- 276

02770 CONCRETE CURBS . . . . . SP 277 - 281

02805 RUBBERIZED MODULAR CROSSING SYSTEM . . . . . SP 282 - 286

02806 PRECAST CONCRETE CROSSING SYSTEM. . . . . SP 287 - 290

02807 RUBBERIZED MODULAR CROSSING SYSTEM
PROCUREMENT. . . . . SP 291 - 294

02820 CHAIN LINK FENCE . . . . . SP 295 - 298

02833 BOLLARDS . . . . . SP 299 - 300

02841 PRECAST CONCRETE WHEEL STOPS . . . . . SP 301

02890 SIGNS . . . . . SP 302 - 304

02920 TURF ESTABLISHMENT . . . . . SP 305 - 306

03050 PORTLAND CEMENT CONCRETE . . . . . SP 307 - 329

03210 CONCRETE REINFORCEMENT . . . . . SP 330 - 337

03300 CAST-IN-PLACE CONCRETE . . . . . SP 338 - 357

03400 PRECAST CONCRETE. . . . . SP 358 - 361

03410 PRECAST CONCRETE HANDHOLES & MANHOLES. . . . . SP 362 - 366

04065 MORTAR AND MASONRY GROUT . . . . . SP 367- 372

04810 UNIT MASONRY ASSEMBLIES . . . . . SP 373 - 381

05120 STRUCTURAL STEEL . . . . . SP 382 - 397

05520 HANDRAILS AND RAILING . . . . . SP 398 - 400

05580 METAL FABRICATIONS . . . . . SP 401 - 415

05650 GENERAL REQUIREMENTS FOR TRACK INSTALLATION . . . . . SP 416- 425

05651 RAIL WELDING . . . . . SP 426 - 443

05652 GENERAL REQUIREMENTS FOR TRACK MONITORING. . . . . SP 444 - 446

05653 TRACK MATERIALS . . . . . SP 447 - 451

05665 JOINTS AND JOINT BARS . . . . . SP 452 - 456

05671 BALLASTED TRACK INSTALLATION . . . . . SP 457 - 465

05673 DIRECT-FIXATION TRACK INSTALLATION . . . . . SP 466 - 493

05681 BALLASTED SPECIAL TRACKWORK . . . . . SP 494 - 500

05682 NO.10 TURNOUT PROCUREMENT . . . . . SP 501 - 507

05683 16'- 6" SWITCH POINT DERAIL PROCUREMENT. . . . . SP 508 - 513

05684 TRACK SWITCH MACHINE PROCUREMENT . . . . . SP 514 - 522

05695 136 POUND RE RAIL . . . . . SP 523 - 526

05696 136 POUND RE RAIL PROCUREMENT . . . . . SP 527 - 530

06100 ROUGH CARPENTRY . . . . . SP 531 - 539

06135 TIMBER CROSSTIES AND SWITCH TIES. . . . . .SP 540 - 546

06136 TIMBER CROSSTIES AND SWITCH TIES PROCUREMENT . . . SP 547 - 553

07210 BUILDING INSULATION . . . . . SP 554 - 558

07920 JOINT SEALANTS . . . . . SP 559 - 563

08110 STEEL DOORS AND FRAMES . . . . . .SP 564 - 568

08330 OVERHEAD COILING DOORS . . . . . .SP 569 - 572

08710 DOOR HARDWARE . . . . . SP 573 - 579

09910 PAINTING . . . . . SP 580 - 588

13100 MODULAR OFFICE TRAILER . . . . . .SP 589 - 597

13125 PRE-ENGINEERED VEHICLE STORAGE BUILDING. . . . . .SP 598 - 639

13601 METAL INSPECTION PLATFORM. . . . . SP 640 - 672

15050 BASIC MECHANICAL MATERIALS AND METHODS . . . . . SP 673 - 684

15055 MOTORS . . . . . SP 685 - 691

15060 HANGERS AND SUPPORTS . . . . . SP 692 - 703

15075 MECHANICAL IDENTIFICATION . . . . . .SP 704 - 712

15082 PLUMBING INSULATION . . . . . SP 713 - 735

15110 VALVES. . . . . SP 736 - 766

15140 DOMESTIC WATER PIPING . . . . . SP 767 - 775

15150 SANITARY WASTE AND VENT PIPING . . . . . SP 776 - 784

15211 GENERAL-SERVICE COMPRESSED-AIR PIPING. . . . . .SP 785 - 794

VOLUME 2

15251 GENERAL-SERVICE COMPRESSED-AIR EQUIPMENT. . . . . .SP 795 - 804

15410 PLUMBING FIXTURES. . . . . SP 805 - 812

15430 PLUMBING SPECIALTIES. . . . . SP 813 - 820

15485 ELECTRIC WATER HEATERS . . . . . SP 821 - 825

15767 PROPELLER UNIT HEATERS . . . . . .SP 826 - 829

15815 METAL DUCTS . . . . . .SP 830 - 835

15820 DUCT ACCESSORIES . . . . . SP 836 - 845

15838 POWER VENTILATORS . . . . . SP 846 - 850

15855 DIFFUSERS, REGISTERS AND GRILLES. . . . . SP 851 - 853

15900 HVAC INSTRUMENTATION AND CONTROLS . . . . . SP 854 - 857

15940 SEQUENCE OF OPERATIONS. . . . . SP 858 - 859

15990 TESTING, ADJUSTING, AND BALANCING . . . . . SP 860 -873

16020 BASIC ELECTRICAL MATERIALS AND METHODS FOR MODULAR OFFICE TRAILER AND PRE-ENGINEERED VEHICAL STORAGE . . . . . SP 874 - 905

16060 GROUNDING AND BONDING . . . . . SP 906 - 913

16111 DUCTS AND RACEWAYS . . . . . SP 914 - 920

16116 UNDERGROUND CONDUITS . . . . . .SP 921- 927A

16120 SWITCH HEATERS AND STANDBY POWER CABLES. . . . . .SP 928 - 932

16122 LOW-VOLTAGE WIRE, CABLE FOR PIT AREA, AND PANELS . . . . . SP 933 – 948

16125 CONDUCTORS AND CABLES HIGH MAST LIGHTING, OUTDOOR LIGHTING AND PANTOGRAPH MAINTENANCE CANOPY AREA RECEPTACLES. . . . . SP 949 - 960

16130 RACEWAYS AND BOXES . . . . . SP 961 - 965

16142 PIT RECEPTACLES AND SWITCHES. . . . . SP 966 - 975

16275 SUBSTATION TRANSFORMERS . . . . . SP 976 - 982

16280 STANDBY AUXILIARY POWER CONTROL CABINET . . . . . SP 983 - 989

16340 MEDIUM-VOLTAGE SWITCHING AND PROTECTION ASSEMBLIES . . . . . SP 990 - 999

16341 MEDIUM VOLTAGE METAL-CLAD SWITCHGEAR . . . . . .SP 1000 - 1014

16430 LOW VOLTAGE DRAWOUT METAL ENCLOSED SWITCHGEAR . . . . . SP 1015 - 1027

16450 OUTDOOR WALK-IN ELECTRICAL EQUIPMENT HOUSING . . . . . SP 1028 - 1055

16500 PIT LIGHTING . . . . . SP 1056 - 1067

16510 EXTERIOR CANOPY LUMINAIRES . . . . . SP 1068 - 1071

16520 HIGH MAST LIGHTING . . . . . SP 1072 - 1077

16600 SWITCH TRACK SNOWMELTER . . . . . SP 1078 - 1088

17101 GENERAL REQUIREMENTS FOR THE SIGNALING SYSTEM . . . . . .SP 1089 - 1100

17117 ELECTROMAGNETIC COMPATIBILITY . . . . . .SP 1101 - 1110

17125 TRACK SWITCH MACHINE LAYOUTS. . . . . SP 1111 - 1117

17126 UNDERGROUND SIGNAL DUCT WORK . . . . . .SP 1118 - 1127

17161 WAYSIDE CASE . . . . . SP 1128 - 1132

17173 POWER SUPPLIES, BATTERY CHARGERS, ELECTRICAL, AND ELECTRONIC COMPONENTS . . . . . SP 1133 – 1142

17211 SIGNAL FOUNDATIONS. . . . . .SP 1143 - 1145

17215 GRID LAYOUTS AND GROUNDING SYSTEMS . . . . . SP 1146 - 1149

17221 INTERIOR AND EXTERIOR WIRE AND CABLE . . . . . SP 1150 - 1156

17231 POWER DITRIBUTION . . . . . SP 1157 - 1159

17251 TESTS AND INSPECTION . . . . . SP 1160 - 1167

17263 TAGS AND LOCKS . . . . . SP 1168 - 1171

17271 MANUALS AND TRAINING . . . . . SP 1172 - 1178

17273 INITIAL PROVISIONING AND EQUIPAGE . . . . . SP 1179 - 1182

17301 OCS - GENERAL REQUIREMENTS . . . . . SP 1183 - 1186

17305 OCS - CATENARY. . . . . SP 1187 - 1196

17311 OCS - CATENARY FOUNDATIONS AND ANCHORS. . . . . SP 1197 - 1212

17313 OCS - SUPPORT STRUCTURES. . . . . SP 1213 - 1223

17314 OCS - SUPPORT STRUCTURES OUTSIDE YARD LIMITS. . . SP 1224 - 1232

17316 ELECTRIFICATION BONDING AND GROUNDING. . . . . SP 1233 - 1238

17319 OCS - SUPPORT AND REGISTRATION DEVICES. . . . . SP 1239 - 1243

17327 OCS - INSULATORS. . . . . SP 1244 - 1247

17329 OCS - SECTION INSULATORS. . . . . SP 1248 - 1251

17331 RAIL BONDING. . . . . .SP 1252 - 1256

17333 OCS - FITTINGS AND HARDWARE. . . . . SP 1257 - 1262

17335 OCS - SWITCHES. . . . . SP 1263 - 1267

17343 OCS - FEEDERS AND RAIL RETURN CONDUCTORS . . . . . .SP 1268 - 1270

18025 SAFETY, SECURITY AND AVAILABILITY REQUIREMENTS . . . . . SP 1271 - 1300

APPENDIX A – LIST OF CONTRACT DRAWINGS

APPENDIX B – CONTRACT DATA REQUIREMENT LIST

APPENDIX C – FEDERAL MINIMUM WAGE REQUIREMENT

APPENDIX D – BUY AMERICA REQUIREMENT

APPENDIX E – AMTRAK SPECIFICATIONS

APPENDIX F – DISTRICT OF COLUMBIA DEPARTMENT OF TRANSPORTATION DETAILS

APPENDIX G – DISTRICT OF COLUMBIA WATER AND SEWER AUTHORITY

APPENDIX H – PEPCO SPECIFICATIONS

APPENDIX I – LAYDOWN/STAGING AREA

SECTION 01150

INTERFACE REQUIREMENTS

PART 1 - GENERAL

1.01 DESCRIPTION:

A. This Section describes the Contractor's obligations and other pertinent information relative to the various interfaces between the Contractor and the Administration and other third parties.

B. Related Work Specified Elsewhere:

1. Section 01110: Summary of Work
2. Section 01130: Construction Procedures
3. Section 01300: Submittals
4. Section 01310: Coordination and Meetings
5. Section 02370: Erosion and Sediment Control

1.02 BASIC INTERFACES:

A. The Contractor shall be responsible for the design, development and implementation of the interface procedures between its work and work performed by others, and for Contractor work at all interface locations with existing AMTRAK facilities.

B. RAILROAD Interfaces

1. The Contractor is alerted that elements of the work under this Contract are to be performed on, over, under, and adjacent to existing operating railroad facilities, some of which are electrified. The term RAILROAD used throughout this Section shall mean Amtrak and/or CSXT, their operations, facilities, and representatives, etc. Refer to the article SPECIFIC INTERFACES elsewhere in this Section for any additional specific information pertinent to each RAILROAD.

2. RAILROAD operations shall be maintained at all times with safety and continuity. The Contractor shall conduct all of its operations on, over, under, or adjacent to RAILROAD right-of-way fully within the rules, regulations, and requirements of the RAILROAD. The Contractor shall be responsible for acquainting itself with such requirements as the RAILROAD may demand.

3. The Contractor is hereby notified that work encroaching on the RAILROAD schedules and operations will not be permitted. Such work must be accomplished in accordance with days/nights and times in these Special Provisions and shall be performed at such times and in such manner as not to interfere with the movement of trains or traffic upon the tracks of the RAILROAD. All work to be done within (on, over, or under) or adjacent to the RAILROAD right-of-way shall be performed by the Contractor in a manner satisfactory to RAILROAD. The Contractor shall use all necessary care and precaution in order to eliminate accidents, delay or interference with the RAILROAD trains, or properties.

4. The Contractor shall obtain verification of the time and schedule of track occupancy from the RAILROAD before proceeding with any construction or demolition work within or adjacent to the RAILROAD right-of-way. The Contractor shall submit for approval to the RAILROAD, staging plans, computations, and a detailed description of the methods or procedures for accomplishing the construction work required under this Contract, including methods of protecting rail operations. The work shall not proceed until these plans and procedures have been approved by the RAILROAD. However, such approval shall not serve in any way to relieve the Contractor of its complete responsibility for the adequacy and safety of its methods or procedures or from responsibility for any damage to the RAILROAD facilities by the acts of the Contractor.

5. The Contractor shall consult the RAILROAD in order to determine the type of protection required to insure safety and continuity of RAILROAD operations based on the particular construction methods and equipment to be used. The RAILROAD will provide all required flagmen, watchmen, and other protective measures for construction. The Contractor shall obtain Amtrak railroad protective services as outlined elsewhere in this Section.

6. The providing of such flagmen, watchmen, and other precautionary measures, shall not, however relieve the Contractor from liability for payment of damages caused by its operations.

7. The Contractor will not be permitted to use RAILROAD personnel for purposes of its own even though such personnel may be required at the immediate site of project construction by the RAILROAD solely for the safe operations of trains or protection of facilities, etc.

8. Before proceeding with any construction or work within or adjacent to RAILROAD property, a pre-construction meeting shall be held with the Contractor specific to this work. The Contractor's staging plans and methods or procedures for construction work and protection

of rail operations shall be discussed in detail and modified if necessary, at the sole discretion of the Engineer and the RAILROAD.

9. All equipment to be used by the Contractor shall be in first-class condition so as to fully prevent failures of defective equipment that might cause delay in the operation of trains or damage to RAILROAD facilities. All equipment shall be equipped with an operating yellow flashing light. This equipment shall not be placed or put into operation adjacent to tracks without first obtaining access permission from the RAILROAD. Under no circumstances shall any equipment or materials be placed or stored within fifteen (15) feet from the centerline of any track or catenary wire, unless approved by the Engineer.

10. Materials and equipment belonging to the Contractor shall not be stored on RAILROAD property without first having obtained permission from the RAILROAD and such permission will be on the condition that the RAILROAD will not be liable for damage to such materials and equipment from any cause. The storage of materials or equipment shall not block access roads. The Contractor shall keep the tracks adjacent to the site clear of all refuse and debris that may accumulate from its operations, and shall leave the RAILROAD property in the condition existing before the start of its operation. The Contractor shall also be liable for any damages to RAILROAD property or facilities caused by the storage, failure, vandalism, etc., of stored material or equipment.

11. The following procedures shall be followed by the Contractor during the installation of all temporary and/or permanent sheeting, shoring and excavation to be performed adjacent to RAILROAD tracks:

    a. The Contractor shall advise the Engineer of the time schedule of each operation and obtain approval of the Engineer so that RAILROAD personnel may properly monitor the work if deemed necessary.

    b. Exploratory trenches shall be hand dug to determine the presence of any underground installation. Before proceeding, these trenches shall be backfilled and immediately compacted. This work shall be done in the presence of the Engineer if deemed necessary.

    c. The excavation shall be protected with barricades and warning lights provided by the Contractor and as directed by the Engineer.

d. Yellow safety fence shall be installed prior to any construction operation adjacent to the RAILROAD tracks. The fence shall be located fifteen (15) feet from the centerline of the nearest track or as directed by the Engineer.

e. After construction is completed, sheet piling shall be cut off 18 inches below existing ground line or finished grade and left in place, unless specified otherwise in the Contract documents and approved in the Contractor's submitted work plan.

f. Final backfilling shall be as required by the Specifications.

12. All drawings for temporary sheeting and shoring shall be prepared and stamped by a District of Columbia Registered Professional Engineer and shall be accompanied by complete design computations when submitted for approval.

13. The Contractor shall request approval/permission from the RAILROAD to install any temporary grade crossings of RAILROAD tracks. The Contractor shall be responsible for all costs associated with installing, maintaining, and removing the temporary grade crossings, gates/chains and locks across the crossing, and any other requirements deemed necessary by the RAILROAD. There is no guarantee that the use of temporary grade crossings will be approved by the RAILROAD.

14. Upon completion of the Work, and before final payment is made, the Contractor shall remove from within the limits of the RAILROAD right-of-way all machinery, equipment, surplus materials, falsework, rubbish, and temporary buildings and other property of the Contractor, and shall leave the right-of-way in a condition satisfactory to RAILROAD.

C. NON-RAILROAD Interfaces (Utilities and other Third Parties):

1. The Contractor shall be responsible for coordinating all utility and other third party interfaces and notifications directly with the appropriate utility company or third party. A copy of all written correspondence and a transcription of all verbal communication between the Contractor and the utility or third party shall be forwarded to the Engineer.

2. For all work under this Contract, any lighting and electric power, where not specifically provided by others, including on a temporary basis when permanent facilities are out of service or not available, shall be provided by the Contractor at no cost to the Administration.

3. Refer to the article SPECIFIC INTERFACES elsewhere in this Section for any additional specific information pertinent to utilities or other third parties.

1.03 SPECIFIC INTERFACES:

A. CSXT Interface

1. A Temporary Construction easement has been purchased from CSXT as shown in the Right-of-Way drawings to allow the contractor to occupy a strip of land on CSXT right-of-way adjacent to the Wedge Yard for access and construction of the Wedge Yard. Contractor shall manage the work within the easement that will allow CSXT safe and unobstructed access to their signal facilities located in the vicinity of the Ninth Street Bridge. Upon completion of the work, the Contractor shall insure that the Easement is left in a safe traversable state for equipment and vehicles satisfactory to CSXT. The contractor shall abide by the following CSXT construction requirements and special provisions.

a. Construction Requirements: Prior to Contractor selection, it is recommended to include the following information in the project specifications where CSX Transportation (CSXT) coordination is specified.

1) All construction related correspondence will be directed to DMJM Harris, acting as the Construction Monitoring Representative (CMR) on behalf of CSXT, with the following contact and address:

Brian V. Harrison
Manager – Construction Services DMJM Harris
260 S. Broad Street,
Suite 1500
Philadelphia, PA 19102
(215) 966-4846

Upon receipt of notification, the CMR will direct the Contractor to the local CSXT construction contact for the project.

2) The Contractor shall submit the following construction procedures and documents. The Contractor shall obtain written acceptance before proceeding with construction.

a) Means and Methods – The Contractor shall develop a detailed submission indicating the progression of work with specific times when tasks will be performed during the project. This submission will include a walkthrough at which time CSXT personnel will be present. Work will not be permitted to commence until the Contractor has provided CSXT with a satisfactory plan that the project will be undertaken without scheduling, performance or safety related issues. Provide a listing of the anticipated equipment to be used, the location of all equipment to be used and insure a contingency plan of action is in place should a primary piece of equipment malfunction. All work in the vicinity of CSXT property that has the potential of affecting CSXT train operations must be submitted and approved by CSXT prior to work being performed. This submission will also include a detailed narrative discussing the coordination of project safety issues between the sponsor, Contractor, CSXT and the CMR. The narrative shall address project level coordination and day to day, specific work operations including, but not limited to, equipment operations, erection plans and temporary works.

b.) Sheeting and Shoring Plans – If excavation within the live load influence zone (a 1.5H to 1V slope line starting at 1.5 feet below top of rail and 12’ from the centerline of track) is necessary, the Contractor shall submit three (3) sets of detailed drawings and one (1) set of calculations in accordance with CSXT Design & Construction Standard Specifications. Shoring shall be designed to resist a vertical live load surcharge of 1,882 lbs. per square foot, in addition to active earth pressure. The surcharge shall be assumed to act on a continuous strip, 8’-6” wide. Lateral pressures due to surcharge shall be computed using the strip load formula shown in AREMA Manual for Railway Engineering, Chapter 8, Part 20.

Allowable stresses in materials shall be in accordance with AREMA Manual for Railway Engineering, Chapter 7, 8, and 15. A Registered Professional Engineer in the District of Columbia must seal all sheeting and shoring plans.

c.) Erosion Control – Plans shall indicate the proposed methods of erosion control during construction and must specifically address means to prevent silt accumulation in railroad roadbed and ditches, and to prevent fouling the track ballast at all times during and following construction.

d.) Construction Schedule – Submit a detailed construction schedule for the duration of the project clearly indicating the time periods while working on and around CSXT right-of-way. As the work progresses, this schedule shall be updated and resubmitted as necessary to reflect changes in work sequence, duration and method, etc.

e.) Insurance – Submit all required insurance information in accordance with the current CSXT Insurance Standards for approval. The complete original policies should be submitted to:

Donna W. Melton
Manager – Insurance
CSX Transportation, Inc.
500 Water Street - C907
Jacksonville, FL 32202
Phone: 904-359-1247
Fax: 904-245-2833

with a copy to the CMR. The insurance policies will be required to be in place and approved prior to any work commencing on or that could potentially impact CSXT right-of-way.

f.) Emergency Action Plan – Submit an emergency action plan indicating the

location of the site, contact numbers, access to the site, instructions for emergency response and location of the nearest hospitals. This plan should cover all items required in the event of an emergency at the site including fire suppression. Coordinate the Emergency Action Plan with the safety related discussion of the Means and Methods submission discussed above. The plan should also include a method to provide this information to each project worker for each day on site.

3.) Up to thirty (30) days will be required to review all construction submissions. Up to an additional thirty (30) days will be required to review any subsequent submissions returned not approved.

4.) The Contractor must not use CSXT right-of-way for storage of materials or equipment during construction. The CSXT right-of-way must remain clear at all times.

5.) The Contractor will be required to abide by the provisions of the Agency/Railroad Construction Agreement. Periodically, throughout the project duration, the Contractor will be required to meet, discuss and, if necessary, take immediate action at the discretion of CSXT personnel and/or the CMR to comply with provisions of that agreement and these specifications.

6.) This project will require extensive use of CSXT Flagmen to protect train operations from project activity in the area of the tracks. While CSXT cannot guarantee the availability of flagmen at all requested times, every accommodation will be extended to the Contractor when forces are available. Flagging requests should be made the CSXT Roadmaster Bill Hildebrand at 410-792-4058 at least thirty (30) days in advance. Termination or cancellation of a flagman requires ten (10) days notice to avoid incurring costs.

7.) All equipment operations that could potentially impact CSXT right-of-way must be coordinated

with the CSXT Flagman.

8.) For sheeting/shoring within eighteen feet (18') of centerline of track, the live load influence zone, and in slopes, the Contractor shall use sheet pile. No sheet pile in slopes or within eighteen feet (18') of centerline of track shall be removed. Sheet piles shall be cutoff three feet (3') below the ground line after backfilling to that point. The remaining three feet (3') shall be backfilled immediately after cutoff.

b. CSXT SPECIAL PROVISIONS

1.) AUTHORITY OF CSXT ENGINEER

The CSXT Representative shall have final authority in all matters affecting the safe maintenance of CSXT operations and CSXT property, and his or her approval shall be obtained by the Agency or its Contractor for methods of construction to avoid interference with CSXT operations and CSXT property and all other matters contemplated by the Agreement and these Special Provisions.

2.) INTERFERENCE WITH CSXT OPERATIONS

a.) Agency or its Contractor shall arrange and conduct its work so that there will be no interference with CSXT operations, including train, signal, telephone and telegraphic services, or damage to CSXT's property, or to poles, wires, and other facilities of tenants on CSXT's Property or right-of-way. Agency or its Contractor shall store materials so as to prevent trespassers from causing damage to trains, or CSXT Property. Whenever Work is likely to affect the operations or safety of trains, the method of doing such Work shall first be submitted to the CSXT Representative for approval, but such approval shall not relieve Agency or its Contractor from liability in connection with such Work.

b.) If conditions arising from or in connection with the Project require that immediate and

unusual provisions be made to protect train operation or CSXT's property, Agency or its Contractor shall make such provision. If the CSXT Representative determines that such provision is insufficient, CSXT may, at the expense of Agency or its Contractor, require or provide such provision as may be deemed necessary, or cause the Work to cease immediately.

3.) NOTICE OF STARTING WORK

Agency or its Contractor shall not commence any work on CSXT Property or rights-of-way until it has complied with the following conditions:

a.) Notify CSXT in writing of the date that it intends to commence Work on the Project. Such notice must be received by CSXT at least ten business days in advance of the date Agency or its Contractor proposes to begin Work on CSXT property. The notice must refer to this Agreement by date. If flagging service is required, such notice shall be submitted at least thirty (30) business days in advance of the date scheduled to commence the Work.

b.) Obtain authorization from the CSXT Representative to begin Work on CSXT property, such authorization to include an outline of specific conditions with which it must comply.

c.) Obtain from CSXT the names, addresses and telephone numbers of CSXT's personnel who must receive notice under provisions in the Agreement. Where more than one individual is designated, the area of responsibility of each shall be specified.

4.) WORK FOR THE BENEFIT OF THE CONTRACTOR

a.) No temporary or permanent changes to wire lines or other facilities (other than third party fiber optic cable transmission systems) on

CSXT property that are considered necessary to the Work are anticipated or shown on the Plans. If any such changes are, or become, necessary in the opinion of CSXT or Agency, such changes will be covered by appropriate revisions to the Plans and by preparation of a force account estimate. Such force account estimate may be initiated by either CSXT or Agency, but must be approved by both CSXT and Agency. Agency or Contractor shall be responsible for arranging for the relocation of the third party fiber optic cable transmission systems, at no cost or expense to CSXT.

b.) Should Agency or Contractor desire any changes in addition to the above, then it shall make separate arrangements with CSXT for such changes to be accomplished at the Agency or Contractor's expense.

5.) HAUL ACROSS RAILROAD

a.) If Agency or Contractor desires access across CSXT property or tracks at other than an existing and open public road crossing in or incident to construction of the Project, the Agency or Contractor must first obtain the permission of CSXT and shall execute a license agreement or right of entry satisfactory to CSXT, wherein Agency or Contractor agrees to bear all costs and liabilities related to such access.

b.) Agency and Contractor shall not cross CSXT's property and tracks with vehicles or equipment of any kind or character, except at such crossing or crossings as may be permitted pursuant to this section.

6.) COOPERATION AND DELAYS

a.) Agency or Contractor shall arrange a schedule with CSXT for accomplishing stage construction involving work by CSXT. In arranging its schedule, Agency or Contractor

shall ascertain, from CSXT, the lead time required for assembling crews and materials and shall make due allowance therefore.

b.) Agency or Contractor may not charge any costs or submit any claims against CSXT for hindrance or delay caused by railroad traffic; work done by CSXT or other delay incident to or necessary for safe maintenance of railroad traffic; or for any delays due to compliance with these Special Provisions.

c.) Agency and Contractor shall cooperate with others participating in the construction of the Project to the end that all work may be carried on to the best advantage.

d.) Agency and Contractor understand and agree that CSXT does not assume any responsibility for work performed by others in connection the Project. Agency and Contractor further understand and agree that they shall have no claim whatsoever against CSXT for any inconvenience, delay or additional cost incurred by Agency or Contractor on account of operations by others.

7.) STORAGE OF MATERIALS AND EQUIPMENT

Agency and Contractor shall not store their materials or equipment on CSXT's property or where they may potentially interfere with CSXT's operations, unless Agency or Contractor has received CSXT Representative's prior written permission. Agency and Contractor understand and agree that CSXT will not be liable for any damage to such materials and equipment from any cause and that CSXT may move, or require Agency or Contractor to move, such material and equipment at Agency's or Contractor's sole expense. To minimize the possibility of damage to the railroad tracks resulting from the unauthorized use of equipment, all grading or other construction equipment that is left parked near the tracks unattended by watchmen shall be immobilized to the extent feasible so that it cannot be moved by unauthorized persons.

8.) CONSTRUCTION PROCEDURES

a.) General

1. Construction work on CSXT property shall be subject to CSXT's inspection and approval.

2. Construction work on CSXT property shall be in accord with CSXT's written outline of specific conditions and with these Special Provisions.

3. Contractor shall observe the terms and rules of the CSXT Safe Way manual, which Agency and Contractor shall be required to obtain from CSXT, and in accord with any other instructions furnished by CSXT or CSXT's Representative.

b). Blasting

1. Agency or Contractor shall obtain CSXT Representative's and Agency Representative's prior written approval for use of explosives on or adjacent to CSXT property. If permission for use of explosives is granted, Agency or Contractor must comply with the following:

a. Blasting shall be done with light charges under the direct supervision of a responsible officer or employee of Agency or Contractor.

b. Electric detonating fuses shall not be used because of the possibility of premature explosions resulting from operation of two-way train radios.

c. No blasting shall be done without the presence of an authorized representative of CSXT. At least 10 days' advance notice to CSXT Representative is required to arrange

for the presence of an authorized CSXT representative and any flagging that CSXT may require.

d. Agency or Contractor must have at the Project site adequate equipment, labor and materials, and allow sufficient time, to (i) clean up (at Agency's expense) debris resulting from the blasting without any delay to trains; and (ii) correct (at Agency's expense) any track misalignment or other damage to CSXT's property resulting from the blasting, as directed by CSXT Representative, without delay to trains. If Agency's or Contractor's actions result in delay of any trains, including Amtrak passenger trains, Agency shall bear the entire cost thereof.

e. Agency and Contractor shall not store explosives on CSXT property.

2. CSXT Representative will:

a. Determine the approximate location of trains and advise Agency or Contractor of the approximate amount of time available for the blasting operation and clean-up.

b. Have the authority to order discontinuance of blasting if, in his or her opinion, blasting is too hazardous or is not in accord with these Special Provisions.

9.) MAINTENANCE OF DITCHES ADJACENT TO CSXT TRACKS

Agency or Contractor shall maintain all ditches and drainage structures free of silt or other obstructions that may result from their operations. Agency or Contractor shall provide erosion control measures during construction and use methods that accord

with applicable state standard specifications for road and bridge construction, including either (1) silt fence; (2) hay or straw barrier; (3) berm or temporary ditches; (4) sediment basin; (5) aggregate checks; and (6) channel lining. All such maintenance and repair of damages due to Agency's or Contractor's operations shall be performed at Agency's expense.

10.) FLAGGING / INSPECTION SERVICE

a.) CSXT has sole authority to determine the need for flagging required to protect its operations and property. In general, flagging protection will be required whenever Agency or Contractor or their equipment are, or are likely to be, working within fifty (50) feet of live track or other track clearances specified by CSXT, or over tracks.

b.) Agency shall reimburse CSXT directly for all costs of flagging that is required on account of construction within CSXT property shown in the Plans, or that is covered by an approved plan revision, supplemental agreement or change order.

C. Agency or Contractor shall give a minimum of 10 days' advance notice to CSXT Representative for anticipated need for flagging service. No work shall be undertaken until the flag person(s) is/are at the job site. If it is necessary for CSXT to advertise a flagging job for bid, it may take up to 90-days to obtain this service, and CSXT shall not be liable for the cost of delays attributable to obtaining such service.

d.) CSXT shall have the right to assign an individual to the site of the Project to perform inspection service whenever, in the opinion of CSXT Representative, such inspection may be necessary. Agency shall reimburse CSXT for the costs incurred by CSXT for such inspection service. Inspection service shall not relieve Agency or Contractor from liability for its Work.

e.) CSXT shall render invoices for, and Agency shall pay for, the actual pay rate of the flagpersons and inspectors used, plus standard additives, whether that amount is above or below the rate provided in the Estimate. If the rate of pay that is to be used for inspector or flagging service is changed before the work is started or during the progress of the work, whether by law or agreement between CSXT and its employees, or if the tax rates on labor are changed, bills will be rendered by CSXT and paid by Agency using the new rates. Agency and Contractor shall perform their operations that require flagging protection or inspection service in such a manner and sequence that the cost of such will be as economical as possible.

11.) UTILITY FACILITIES ON CSXT PROPERTY

Agency shall arrange, upon approval from CSXT, to have any utility facilities on or over CSXT Property changed as may be necessary to provide clearances for the proposed trackage.

12.) CLEAN-UP

Agency or Contractor, upon completion of the Project, shall remove from CSXT's Property any temporary grade crossings, any temporary erosion control measures used to control drainage, all machinery, equipment, surplus materials, falsework, rubbish, or temporary buildings belonging to Agency or Contractor. Agency or Contractor, upon completion of the Project, shall leave CSXT Property in neat condition, satisfactory to CSXT Representative.

13.) FAILURE TO COMPLY

If Agency or Contractor violate or fail to comply with any of the requirements of these Special Provisions, (a) CSXT may require Agency and/or Contractor to vacate CSXT Property; and (b) CSXT may withhold monies due Agency and/or Contractor; (c) CSXT may require Agency to withhold monies due Contractor; and (d) CSXT may cure such failure and the Agency shall reimburse CSXT for the cost of

curing such failure.

2. The Contractor shall, before commencing any work or entering the Administration's right-of-way, attend the "CSXT On-Track Safety for Contractor Roadway Workers on CSXT Property" training Course. The Contractor shall comply with the CSXT Safety Requirements throughout the entire construction period. All costs encountered due to complying with the CSXT safety requirements will be at the sole expense of the Contractor.

3. All work on, over, or under CSXT's right-of-way or within fifteen (15) feet of the centerline of the nearest CSXT track, or at any other time deemed necessary by CSXT, will require railroad protective services (flagman). Flagmen shall be ordered by the Contractor in advance of the work through CSXT 's Roadmaster or designee. Payment to CSXT for flagmen will be made by the Administration at no cost to the Contractor for up to 3400 hours total. Payment beyond 3400 hours will be paid by the Administration to CSXT, but the cost will be deducted from the Contractor's next progress payment(s) or the Contractor shall reimburse the Administration.

4. During the passing of trains all equipment within the fouling area shall cease operation and idle in a static position until the flagman allows resumption, unless otherwise approved by the Engineer.

B. Amtrak Interface

1. Amtrak Interface will be required whenever the Contractor's work will take place within fifteen (15) feet of the centerline of the nearest Amtrak track, or on, over, or under Amtrak right-of-way.

2. The Contractor shall submit for approval an installation and construction sequence plan for each area of construction which affects existing AMTRAK operations. Detailed plans of the Contractor's procedures, including an itemized time schedule and breakdown of the labor force shall be submitted as part of the plan. The plan shall be submitted to the Engineer twenty-one (21) days prior to commencing any field staging, construction, installation, or testing work for each area of construction. The development and implementation of an integrated construction schedule that provides for Systems interface (construction, modification, testing, and/or shutdown and startup of the signal, communication, catenary, and/or traction power systems) shall be provided by the Contractor.

Where the Contractor's submitted sequencing schedule necessitates a Systems interface and integration, the Engineer shall provide information on specific activities and durations necessary for this

interface and integration. These shall be provided for by the Contractor in a revised sequencing plan submittal. The Contractor shall be responsible for providing work around plans to allow continued productivity during the Systems activities. No claim for delay or additional compensation to the Contractor will be made for the provision of Systems integration and interface.

3. No work of any type shall be performed on, over, or under Amtrak right-of-way, or which could affect Amtrak roadbed, trackage, or operations, without written permission by Amtrak and evidence of proper insurance as may be required.

4. The Contractor shall secure written permission for work involving Amtrak's right-of-way from Amtrak’s Mid Atlantic Division Construction Project Manager or designee. Application should be made at least 60 days in advance of the anticipated commencement of the work and need for railroad protective services.

5. The Contractor shall, before commencing any work or entering the Amtrak right-of-way, attend the Amtrak Contractor Safety/Security Training Course. The Contractor shall comply with Amtrak safety requirements throughout the entire construction period. All costs encountered due to complying with Amtrak safety requirements will be at the sole expense of the Contractor.

6. All work on, over, or under Amtrak's right-of-way or within fifteen (15) feet of the centerline of the nearest Amtrak track, or at any other time deemed necessary by Amtrak, will require railroad protective services (flagman). Flagmen shall be ordered by the Contractor in advance of the work through Amtrak's Construction Project manager or designee. Payment to Amtrak for flagmen will be made by the Administration at no cost to the Contractor for up to 3400 hours total. Payment beyond 3400 hours will be paid by the Administration to Amtrak, but the cost will be deducted from the Contractor's next progress payment(s) or the Contractor shall reimburse the Admi4nistration.

7. In accordance with Section 01300, shop drawings shall be submitted to Amtrak’s Mid-Atlantic Construction Project Manager or designee for approval of any work in the contract documents impacting Amtrak such as foundation excavation adjacent to track, etc. The Contractor shall also submit identical shop drawings to the Engineer for approval.

8. All Contractor(s) and Sub-Contractor(s) must request & have a then current fully executed Amtrak Temporary Permit to Enter and be in compliance with its requirements prior to entering property. Requests for Temporary Permit to Enter Upon Property information shall be

directed to Director Project Initiation & Development, National Railroad Passenger Corporation, 30th Street Station, Mail Box 64, Philadelphia, PA 19104-2817; initial contact can be made to Ms. Kate McGrath 215-349-1750.

9. The signaling contract limits for the project is located at Amtrak's 'C' Yard entering signal that is located at approx. stationing 103+07. Amtrak is responsible for the design, furnish and installation of the signaling equipment for the entering signal. This shall include insulated joints, approach track circuit, and impedance bonds.

1.04 OTHER POINTS OF CONTACT for interfacing work within this contract

A. **District of Columbia, Watershed Protection Division**

Sediment and Storm Water Technical Services Branch
51 N Street, NE, 5th floor
Washington, DC 20002
(202) 535-2240

B. **PEPCO**
Temitayo Gboluage
(202)872-2859

PART 2 - PRODUCTS

NOT USED

PART 3 - EXECUTION

NOT USED

PART 4 - MEASUREMENT AND PAYMENT

4.01 INTERFACE REQUIREMENTS:

A. Interface Requirements will not be measured for payment, except for Yellow Plastic Safety Fence (see Section 01500 for Measurement and Payment).

B. Interface Requirements will not be paid for directly, except for Yellow Plastic Safety Fence (see Section 01500 for Measurement and Payment), but will be considered incidental to the appropriate work item.

END OF SECTION

SECTION 01300

SUBMITTALS

PART 1: GENERAL

1.01 DESCRIPTION:

A. This Section specifies the general requirements and procedures for preparing and transmitting data to the Engineer for informational purposes or for approval. Other requirements for submittals may be specified under applicable sections of these Specifications. This Section includes:

1. Progress Schedule
2. Proposed Products List
3. Contractor's Drawings
4. Product Data
5. Sources of Supply and Samples
6. Manufacturers' Instructions
7. Manufacturers' Certificates
8. Operations and Maintenance Data
9. Progress Photographs
10. Request for Progress Payment
11. Estimated Cost Breakdown

B. Related Work Specified Elsewhere:

1. SECTION 01450 - Quality Assurance and Quality Control
2. SECTION 01780 - Contract Closeout

1.02 PROGRESS SCHEDULE (in lieu of GP-8.04.A):

A. General:

1. Careful evaluation and pricing of the schedule provisions of this Contract are important to assure compliance with the language and intent of the schedule specification. The schedule provisions are designed to provide the Contractor and the Administration with a tool for planning and controlling the work. The schedule provisions must be strictly followed to insure both timely progress payments and equitable compensation for changes and delays. The Contractor must perform work in accordance with the approved Critical Path Method (CPM) Schedule to achieve timely completion of all Contract milestones and to avoid acceleration, termination for default, and end of Contract claims for liquidated damages. The Contractor must give the schedule provisions particular consideration and resolve any areas of uncertainty by asking appropriate questions prior to bid opening.

2. The Contractor shall provide CPM schedules as defined in the following criteria.

a. The purpose of the Project Schedule shall be to:

i. Assure adequate planning, scheduling and reporting during execution of the work by the Contractor;

ii. Assure coordination of the work of the Contractor and the various subcontractors and suppliers at all tiers;

iii. Assist the Contractor and Engineer in monitoring the progress of the work and evaluating proposed changes to the Contract and the Project Schedule; and

iv. Assist the Engineer in determining required dates for owner supplied materials and services.

v. Assist the Administration and its designated construction manager in coordinating interrelated work elements of multiple prime contractors.

b. The Project Schedule shall employ CPM using retained logic for the planning, scheduling and reporting of the work to be performed under the Contract. The schedule will be produced utilizing the latest version of Primavera Project

Planner (P3) software system. The type of schedule shall be Precedence Diagramming Method (PDM).

c. The Contractor shall provide Time Scale Logic Diagrams and computer produced time reports as stipulated herein, at no additional cost to the Administration.

d. The Contractor shall meet with the Engineer to conduct a joint review of the Project Schedule requirements of the Contract to assure the Administration of the Contractor's understanding of the requirements of this Section.

3. Contractor's Scheduling Representative:

a. Tthe Contractor shall designate in writing, and submit qualifications of, a Scheduling Representative, who shall be responsible for preparation and maintenance of the Project Schedule. The Scheduling Representative may be from within the Contractor's organization or an outside consultant. The Engineer shall have the right to disapprove the designated Scheduling Representative, in which case the Contractor must resubmit a replacement for approval. After acceptance, the Contractor may not replace the Scheduling Representative without prior written consent of the Engineer.

b. The Scheduling Representative shall have complete authority to act on behalf of the Contractor in fulfilling the Project Schedule requirements of the Contract and such authority shall not be interrupted throughout the duration of the Contract unless approved in writing by the Engineer.

c. The Scheduling Representative shall attend all schedule-related meetings and all monthly update meetings throughout the duration of the Contract in addition to the General Superintendent.

d. The Contractor agrees that whenever the Engineer advises the Contractor in writing that the Scheduling Representative is not performing his/her duties to the satisfaction of the Administration, the Contractor shall replace the Scheduling Representative at no additional cost to the Administration and designate in writing, within seven (7) calendar days, a new authorized representative satisfactory to the Engineer.

C. Project Schedule Requirements

1. Detailed Schedule #1:

a. The Contractor shall submit a Detailed Schedule #1 within 21 days of Notice to Proceed showing all work to be accomplished on the project. Detailed Schedule #1 shall include, but not be limited to, the following:

i. Procurement activities:

01. The proposed procurement activities shall include mobilization, shop drawings and sample submittals, fabrication and delivery of key and long-lead procurement elements. The schedule shall indicate intended submittal dates and realistic delivery dates for fabrication and delivery activities.

02. The Administration's review of: shop drawings, product data, samples and requested substitutions shall be identified as schedule activities. The minimum duration for these activities shall be three calendar weeks for shop drawings, product data and samples and six and a half calendar weeks for requested substitutions in accordance with Special Provisions: Shop Drawings, Product Data and Samples and Request For Substitutions.

03. All durations of procurement activities shall be shown in working days on a five-day per week basis, unless the standard workweek for the Contract is different than five days. In that case, the duration shall be adjusted accordingly.

ii. Construction activities:

01. The construction activities shall cover all physical work activities performed by the Contractor and subcontractors.

02. The construction activities shall also cover all work to be performed by the Administration or its contractors related to the Contract to get all of the inter-project dependencies identified explicitly and in detail.

03. The construction activities shall be described by location, phase and sequence as appropriate with the work readily identifiable so that progress can be adequately measured.

04. The time duration assigned to each activity shall be the Contractor's best estimate of working days required to complete the activity considering the scope and resources planned for the activity and shall be limited to a maximum of fifteen (15) working days for each activity.

iii. Milestone events as required by the Contract Documents.

iv. Commissioning activities:

01. The commissioning activities shall cover all training activities required by the contract prior to project or phase substantial completion; and

02. The commissioning activities shall cover all testing activities required by the contract prior to project or phase substantial completion.

b. Anticipated lost time due to weather shall be included in the Schedule to ensure completion of all work within the Contract time. The Contractor's progress schedule must reflect these anticipated adverse weather delays in all weather dependant activities.

Monthly Anticipated Adverse Weather Delays
Work Days Based on 5 Day Work Week

Jan	Feb	Mar	Apr	May	Jun
8	8	7	4	1	1

Jul	Aug	Sep	Oct	Nov	Dec
2	2	2	2	4	5

These days will be eliminated from the Schedule's work calendar and spread over each month. Individual activity durations are not to be increased to include expected lost weather days.

Any temperature sensitive activities, such as asphalt paving, shall be indicated in the schedule and accepted by the Engineer as reasonable. The work calendar associated with these activities shall also be accepted by the Engineer.

c. The following shall be depicted (on the Logic Diagram and in the subsequently generated computer schedule reports) for each activity.

i. A unique activity number limited to a maximum of ten (10) numerals; no letters, no spaces, no symbols; prefaced with the two (2) character member project designation.

ii. Concise description of the work represented by the activity (maximum forty-eight (48) characters). The work related to each activity shall be limited to one work trade and one area. Activity descriptions shall include verbs and shall quantify the work where possible.

iii. Performance responsibility by discipline code: MECH, ELEC, etc., or other acceptable abbreviations approved by the Engineer (maximum of six (6) characters) the first two (2) characters of the 6 character code shall be the member project designation.

iv. A maximum of six (6) character code with the first two characters set to the member project designation that shall identify the phase of the project in which the activity is to be performed.

d. Each submission of Detailed Schedule #1 shall include:

i. A computer diskette or CD-R of all electronic schedule information.

ii. A color coded plot of the proposed Detailed Network (Time Scale Logic Diagram) which shall be neatly organized and plotted time scaled according to Early Start of all activities from left to right on 22”X34” standard size sheets with suitable notation relating the interface points among sheets.

iii. Computer generated schedule reports:

01. In Total Float order.

02. In Early Start order.

03. In order of activity number giving predecessors and successor activities, with number, description and duration.

iv. A written Narrative that shall present the construction approaches and explains the schedule logic. The Narrative shall discuss the project’s critical path, state how the Contractor plans to work the project (days/Shifts/hours), and present any weather and temperature restrictions included in the schedule. Where applicable, the narrative shall completely discuss the interface between the contractor's work and other contractors at the level of detail sufficient to manage the various contractors, and to the satisfaction of the construction manager.

e. If the Engineer questions the Contractor's proposed activities, logic, or durations, the Contractor shall provide a satisfactory revision, or adequate justification, to the satisfaction of the Engineer.

f. Failure by the Contractor to include any element of work required for performance of the Contract shall not excuse the Contractor from completing all work within the Contract time. Such omission or error, when detected by the Contractor or the Engineer, shall be corrected in the next issue of the project schedule, without increasing the project’s performance time.

2. Detailed Schedule #2:

a. The format for the submission shall be the same as required for Detailed Schedule #1.

b. The Contractor will submit Detailed Schedule #2 which shall include all appropriate manpower, and if specifically requested, major equipment for the schedule activities.

c. The manpower loading of each activity in the Network, for a fixed or unit price contract, shall be the total number of man-days of each appropriate craft, not the total number of crew-days. For a fixed price contract, the total number of man-days assigned to the Network shall correlate with the labor costs in the Schedule of Values for each subcontractor's work.

d. The number of equipment units on each activity shall be for those equipment items specified by the Engineer.

e. Each submission of Detailed Schedule #2 shall include:

i. A computer diskette or CD-R of all electronic schedule information.

ii. Computer-generated schedule reports

01. A listing of all schedule activities showing the manpower and equipment assigned to each activity.

02. For each trade included in the Network, and in total, a manpower analysis in graphic format. One graph shall show the number of man-days of effort, by week, over the duration of the Project Schedule based on both the Early Start of all activities and the Late Start. A second graph will show the cumulative manpower usage, both Early and Late, over the project duration. These manpower-loading graphs shall be computer generated from the Contractor's schedule data.

03. For each equipment item included in the Network, a usage analysis in graphic format by Early and Late Starts.

iii. A Narrative presenting the manpower and equipment information in summary form and discussing any anticipated problems with attainment of the required levels. If there are any changes between Detailed Schedule I and Detailed Schedule II, it is subject to review by the Engineer and must be accompanied by an additional plot.

D. Engineer Reviews, Revisions and Acceptance

1. The Engineer shall review the initial submissions of Detailed Schedule #1 and Detailed Schedule #2 and shall respond with comments within three calendar weeks. Any areas which, in the opinion of the Engineer, conflict with timely completion of the Contract shall be subject to revision by the Contractor.

2. The Contractor shall revise the Schedules to reflect the Engineer's comments.

3. The Engineer shall issue an acceptance letter upon determining that the Contractor's schedules reflect a reasonable representation of expected and required project performance. Acceptance by the Engineer of the Contractor's Project Schedule does not relieve the Contractor of any responsibility whatsoever for the accuracy or feasibility of the Project Schedule, or of the Contractor's ability to meet the Contract Completion Date. Nor does such acceptance create a warranty by the Engineer expressed or implied of the activities, logic, durations or manpower and equipment loading of the Contractor's Project Schedule.

4. In the event that Detailed Schedule #1 indicates the Contractor's plan to finish prior to the Contract completion date, the Contractor and the Administration shall execute a change order adjusting the Contract completion date to coincide with the Contractor's planned finish date at no expense to the Administration. Liquidated Damages will be measured from the adjusted Contract completion date.

5. Acceptance by the Engineer of the Contractor's Detailed Schedule #2 will be a precedent for any progress payments under the Contract.

E. Project Schedule Updating:

1. The Project Schedule shall be updated on a monthly basis throughout the entire Contract time and until the Contract's Substantial Completion. The Contractor shall meet with the Engineer each month at the Schedule Update meeting to review actual progress made through the data date of the Schedule Update, including dates activities started and/or completed, and to discuss the scheduling of future work. Revisions to the Network logic to more accurately reflect the anticipated workflow can be discussed and mutually agreed-to, as well as changes to activity durations, manning and equipment. The effective date of each Schedule Update, shall be the effective date of the Progress Payment Request. Contractor-prepared documents presented at the update meeting shall include the following:

a. One (1) marked-up copy of the previous month's Detailed Network (Time Scaled Logic Diagram), indicating the progress on schedule activities and the revised (current) remaining durations. This marked-up copy shall be clearly legible and shall be accomplished by use of felt-tip markers and red ink.

b. One (1) marked-up copy of the previous month's Schedule Update computer-produced reports coordinated with the requirements of the above paragraphs and indicating actual activity start and/or complete dates, revised (current) remaining durations, and percent complete with regard to activity progress.

c. A listing of proposed activities to be added together with predecessors and successors, durations, and manpower and equipment loadings. This listing should include activities for all additional work given to the Contractor during the month through changed drawings or other direction.

d. A listing of proposed activities to be deleted.

e. A listing of any proposed logic, duration or manning changes that would make the schedule more accurately reflect the project’s expected performance. The reasons for these changes are to be described by the Contractor’s Scheduling Representative and accepted by the Engineer.

2. In case of disagreements at the schedule update meeting, concerning actual progress to date, the Engineer's determination shall govern.

3. In the event a submittal is rejected or returned for correction, a new activity will be inserted into the schedule for Resubmission and another for Review of the Resubmission.

4. Upon completion of the schedule update meeting, the Contractor shall revise the Project Schedule to reflect progress as of the data date of the Schedule Update and any required revisions to the Project Schedule, and carry out a computer-produced calculation to determine the status of the Project Schedule. The Contractor shall process the schedule within three (3) calendar days and forward the update to the Engineer. The Engineer shall review the update upon receipt, and shall process the monthly request for payment based upon the accepted update.

5. Each Project Schedule Update, based upon the Contractor's input as discussed above, will be forwarded to the Engineer and will include the following information:

   a. A written Narrative that compares the current project completion date to the contract completion date and presents the current critical path. The Narrative should also discuss current and expected progress and current and expected manning compared to the requirements of the schedule. Is should describe current and expected problems and present possible cures. It should identify any decisions or actions needed from the Administration or the Engineer. The Narrative should also include the following detailed information:

      i. A listing of activities added and deleted.

      ii. A listing of logic changes.

      iii. Specific future actions that will recover any existing project slippage.

   b. A computer diskette or CD-R containing the latest schedule update in electronic file format.

   c. A color-coded plot of the current Network (Time Scale Logic Diagram), organized and plotted according to Early Start of all activities.

d. Computer generated schedule reports:

i. By Total Float.

ii. By Early Start.

iii. Total numerical order report with predecessors and successors.

iv. Trade manpower weekly and cumulative graphs.

v. Equipment Usage Graph (If Required).

e. Acceptance of the monthly update shall be required before the monthly progress payment is released.

F. Recovery Schedules

1. If, as a result of the monthly Schedule Update, the Project Schedule appears to no longer allows attainment of the Project completion date, the Engineer will request, and the Contractor shall submit, a revised Project Schedule that recovers the current slippage. The Contractor may improve the remaining schedule by performing sequential activities concurrently or by performing activities more quickly than planned with additional manpower or equipment. The Engineer shall make his request in writing within five (5) calendar days of receiving the monthly update. The Contractor shall submit this recovery schedule at least seven (7) calendar days before the next scheduled update meeting so that the Engineer may review and accept the revised Project Schedule for use in the next schedule update.

2. The Contractor will attach a written narrative to the recovery schedule that will describe each of the revisions to the schedule logic, durations and manning. The Contractor will issue a revised Network (Time Scaled Logic Diagram), appropriate computer reports and a computer diskette or CD-R of the electronic data.

G. Time Impact Analysis for Proposed Change Orders and Delays:

1. When the Contractor desires to obtain an extension of the project duration because of a change order or other occurrence on the project, the Contractor shall submit to the Engineer a written Time Impact Analysis illustrating the influence of the change order or occurrence on the Contract Schedule. Each Time Impact Analysis

shall include a Fragmentary Network (FragNet) demonstrating how the Contractor proposes to incorporate the change order or occurrence into the Project Schedule. The Time Impact Analysis shall demonstrate the time impact based on the date the change order was given to the Contractor or the date of the occurrence; the status of construction at that point in time; and the event time computation of all affected activities. Upon approval by the Engineer, the change order or occurrence shall be included in the next Project Schedule update.

2. Two (2) copies of each Time Impact Analysis shall be submitted in accordance with the following timing along with a written proposal for any requested time extension;

   a. Within seven (7) calendar days after receipt of a written change order.

   b. Within ten (10) calendar days from the beginning of a delay from unforeseeable causes.

   c. With the filing of a written notice of claim with the Procurement Officer.

3. Approval or rejection of each Time Impact Analysis by the Engineer shall be made within seven (7) calendar days after receipt of each Time Impact Analysis, unless subsequent meetings and negotiations are necessary. Upon approval, a copy of the Time Impact Analysis signed by the Engineer shall be returned to the Contractor, and incorporated into the next Project Schedule Update.

4. The Time Impact Analysis related to a change order shall be incorporated into and attached to the applicable change order.

5. Activity delays shall not automatically mean that an extension of the Contract time is warranted or due the Contractor. It is possible that a change order or occurrence will not affect existing critical activities or cause non-critical activities to become critical. A change order or occurrence may result in only absorbing a part of the available total float that may exist within an activity chain of the Network, thereby not causing any effect on the Contract time.

6. Float is not for the exclusive use or benefit of either the Administration or the Contractor. Extension of the Contract time will be granted only to the extent the equitable time adjustments to the activity or activities affected by the change order or occurrence

exceeds the total float of a critical activity (or path) and extends the Contract time.

7. In cases where the Contractor does not submit a Time Impact Analysis within the time requirements stated above, it shall be considered a waiver of any request for an extension of the Contract Performance Time. Any subsequent Time Impact Analysis submitted by the Contractor shall be dismissed by the Procurement Officer as untimely.

8. The master schedule in force at the time of the alleged delay will be used to determine the impact of the alleged general contractor delay to other general contractors.

1.03 PROPOSED PRODUCTS LIST:

A. Within ten (10) days after date of Notice to Proceed, submit seven (7) copies of a complete list of major products proposed for use, with name of manufacturer, trade name, and model number for each product. The Engineer's approval of the products list shall not relieve the Contractor of the contract requirements or the requirement of the Contractor to submit additional detail for fabricated products or more detailed elements of the project.

B. For products specified only by reference standards, give manufacturer, trade name, model or catalog designation, and reference standards.

1.04 CONTRACTOR'S DRAWINGS:

A. General:

1. The Contract Drawings show the general arrangement and such details as are necessary to provide a comprehensive description of the work to be performed.

2. The Contractor shall prepare such Shop and working Drawings as are necessary to adequately perform the work.

3. All Shop and Working Drawings shall be on sheets measuring 22 inches by 34 inches. Each drawing shall have a blank area five inches by five inches adjacent to the title block to provide space for Contractor and Engineer review stamps. The title block shall display the following:

a. Contract Number and Name

b. Number and Title of the Drawing

c. Date of Drawing or revision

d. Name of Contractor and Subcontractor submitting drawing

e. Clear identification of contents and location of work

4. Drawings and design calculations for support of excavation, sheeting and shoring, decking, falsework, form work, and for other temporary work and methods of construction the Contractor proposes to use, will be required to be furnished by the Contractor. Such drawings shall be left to the Contractor who shall be responsible for the safety and successful construction of the work. Drawings and design calculations which are the responsibility of the Contractor, shall bear the seal of a structural engineer, registered in the District of Columbia.

5. A Contractor's transmittal letter shall accompany each submittal. The Contractor's transmittal letter and submittal shall be consecutively numbered and shall clearly and completely describe any variation from the contract requirements.

6. A sequential number shall be shown on each Shop or Working Drawing submission. Re-submittals will be followed by a revision letter (A, B, C, etc.) and handled in the same manner as first submitted.

7. Submittals not conforming to the requirements of this specification shall be summarily rejected.

8. Review and Acceptance shall not relieve the Contractor from his responsibility for accuracy of submittals, for conformity of submittals to requirements of Contract Drawings and Specifications, for compatibility of the described product with contiguous products and the rest of the system, or for protection of completion of the Contract in accordance with the Contract Drawings and Specifications.

9. The Engineer's review, correction and acceptance of submittals shall not relieve the Contractor of responsibility for errors and omissions in submittals and associated calculations.

10. The Contractor's liability to the Administration, in case of deviations in the submittals from requirements of the Contract Document, is not relieved by the Engineer's review and acceptance

of submittals containing deviations unless the Administration expressly approves the deviation through the issuance of a change notice.

11. Catalog cuts shall highlight the actual equipment/component proposed to be used. Generic catalog cuts will not be accepted.

12. If the material/equipment/components proposed to be used do not conform to the stipulated standards, the Contractor shall submit the copies of the conforming standards highlighting the deviations from the stipulated standards. The impact of the derivations on cost and performance shall be brought out in the related submittal and the deviation request.

13. Schedule submittals to expedite the Project, and deliver to Engineer. Coordinate submission of related items.

14. All work in and on the property of Amtrak or work, which may affect their operations, must be approved by Amtrak. Where work involves Amtrak coordination, the Contractor shall submit four (4) copies of the submittal to Amtrak with a copy to the Engineer. For such submittals, the Contractor shall incorporate additional time for Amtrak review in the project schedule. All shop or working drawings shall be sent or delivered to Engineer directly from the Contractor, not from Subcontractors, fabricators or suppliers. No shop drawings concerning work on Amtrak property shall be regarded as approved until Amtrak, and the Engineer grant approval. See Section 01150.

15. All submittals from Subcontractors shall be reviewed and approved by the Contractor prior to submittal to the Engineer. The Contractor's review and approval shall certify that the submitted project has been reviewed by the Contractor and that based on this review, it conforms the contract requirements. Further, the Contractor's approval shall certify that the intended product is compatible with all other products, to which it must integrate and to the overall project.

B. Shop and Working Drawings:

1. Submit one (1) reproducible and five (5) legible copies plus the number of copies required by the Contractor of all Shop and Working Drawings and required specifications to the Engineer for approval. These drawings shall be complete and detailed. Shop and Working Drawings shall consist of fabrication, erection and setting drawings, schedule drawings, manufacturer's scale drawings,

wiring and control drawings, cuts from entire catalogs, pamphlets, descriptive literature, and performance and test data. Working Drawings shall be accompanied by calculations or other sufficient information to completely explain the structure, machine or system described and its intended manner of use.

2. Check and coordinate drawings and schedules with the work of all trades involved before they are submitted for the approval of the Engineer. Each drawing shall bear the Contractor's stamp of approval as evidence of such checking and coordination. Drawing schedules submitted with out this stamp of approval may be returned to the Contractor for resubmittal.

3. Submit all drawings and schedules sufficiently in advance of construction requirements to permit no less than twenty-one (21) days for review and appropriate action by the Engineer. If submittals require approval from Amtrak, the Contractor shall allow sixty (60) days for their reviews.

4. The approval of drawings and schedules will be general, but approval shall not be construed:

   a. As permitting any departure from the Contract requirements.

   b. As relieving the Contractor of the responsibility for any errors, including details, dimensions, and materials.

   c. As approving departures from details furnished by the Engineer, except as otherwise provided herein.

   d. As a Notice to Proceed on a change to the contract that would result in additional time or cost to the Contractor.

5. Drawings for work on utility facilities, streets, and other facilities which are constructed for owners other than the Administration shall be coordinated so that the information required by these owners is included on the Working Drawings for their facilities.

6. If drawings show variations from the Contract requirements because of standard shop practice or for other reasons, describe such variations in the letter of transmittal. If applicable, the Engineer may approve any or all such variations, subject to a proper adjustment in the Contract. If the Contractor fails to describe such variations he shall not be relieved of the responsibility for executing the work in accordance with the Contract, even though such drawings have been approved.

7. If the drawings or schedules as submitted describe variations in accordance with Article 1.04.B.6 herein and show a departure from the Contract requirements, which the Engineer finds to be in the interest of the Administration and to be so minor as not to involve a change in the Contract price or time performance, the Engineer may approve the drawings.

8. If approved, or approved as noted, by the Engineer, each copy of the drawing will be identified as having received such approval by being so stamped "Approved" or "Approved As Noted" and dated.

9. Drawings stamped "Not Approved" and with the required corrections shown will be returned to the Contractor for correction and resubmittal. Resubmittals will be handled in the same manner as first submittals. On resubmittals the Contractor shall direct the specific attention, in writing or on resubmitted drawings, to revisions other than the corrections requested by the Engineer on previous submittals.

10. The Contractor shall make any corrections required by the Engineer. If the Contractor considers any correction indicated on the drawing to constitute a change of the Contract requirements, notice as required under the Section of the General Provisions entitled Changes shall be given to the Engineer.

11. The number of Shop and Working Drawings provided by the Contractor in excess of the number requested in Article 1.04.B.1 will be returned to the Contractor.

12. When Shop and Working Drawings have been completed to the satisfaction of the Engineer, the Contractor shall carry out the construction in accordance therewith and shall make no further changes except upon written instructions from the Engineer.

13. Submittals which are "Approved as Noted" shall be resubmitted after compliance to the comments relating to the subjective approval. The Contractor shall supply the Engineer with the number of drawings requested in Article 1.04.B.1.

14. The Contractor shall be responsible for, and bear all cost of damages which may result from the ordering of any material or from proceeding with any part of the work prior to the approval by the Engineer of the necessary Shop and Working drawings.

1.05 PRODUCT DATA:

A. Submit the number of copies required in Article 1.04.B.1.

B. Mark each copy to identify applicable products, models, options, and other data. Supplement manufacturers' standard data to provide information unique to this Project.

C. After review, distribute in accordance with Article 1.04 above and provide copies for Record Documents described in SECTION 01780 - Contract Closeout.

1.06 SOURCE OF SUPPLY AND SAMPLES:

A. As soon as practicable after Notice to Proceed, furnish for approval of the Engineer the proposed source of supply of materials to be utilized in the project and the samples required by the Specifications or requested by the Engineer. Unless otherwise indicated, submit not less than two identical samples of each type required. Pre-pay all shipping charges on samples. Materials or equipment for which samples are required shall not be used in the work until approved in writing by the Engineer.

B. Label each sample indicating:

1. Name of Project and Contract Number

2. Name of Contractor and Subcontractor

3. Material or equipment represented

4. Source

5. Name of producer and brand; include model number, style, color name, etc. if applicable.

6. Specification Section, Article or Paragraph

7. Location in project

C. Samples of finished materials shall have additional markings that will identify them under the finish schedules. Submit samples of finishes from the full range of manufacturers' standard colors, textures, and patterns for the Engineer's selection.

D. Mail under separate cover letter in triplicate submitting each shipment of samples and containing information required in Article 1.04.B herein. Enclose a copy of this letter with the shipment and send a copy of this letter to the Engineer.

E. Approval of a sample shall be only for characteristics or use named in such approval and shall not be construed to change or modify any Contract requirements.

F. Certain samples may be tested by the Administration as specified. Approved samples not destroyed in testing will be retained by the Engineer. Materials and equipment incorporated in the work shall match approved samples. Samples not destroyed in testing and not approved will be returned to the Contractor at his expense, if so requested at time of submission.

G. Failure of any material to pass specified tests will be sufficient cause for refusal to consider, under the Contract, any further samples of the same brand and make of that material. The Administration reserves the right to disapprove any material or equipment which previously has proved unsatisfactory in service.

H. Samples of various material or equipment delivered on the site or in place may be taken by the Engineer for testing. Samples failing to meet Contract requirements will automatically void previous approvals of items tested.

I. When tests are required, only one test of each sample proposed for use will be made at the expense of the Administration. Samples, which do not meet Specification requirements, will be rejected. Retesting of additional samples will be made by the Administration at the expense of the Contractor.

1.07 MANUFACTURERS' INSTRUCTIONS:

A. When specified individual Specification Sections, submit manufacturers' printed instructions for delivery, storage, assembly, installation, start-up, adjusting, and finishing, in quantities specified for Product Data.

B. Identify conflicts between manufacturers' instructions and Contract Documents.

1.08 MANUFACTURERS' CERTIFICATES:

A. When specified in individual specification Sections, submit manufacturers' certificate to Engineer for review, in quantities specified for Product Data.

B. Indicate material or Product conforms to or exceeds specified requirements. Submit supporting reference date, affidavits, and certifications as appropriate.

C. Certificates may be recent or previous test results on Material or Product, but must be acceptable to the Engineer.

1.09 OPERATIONS AND MAINTENANCE DATA:

A. At least ten (10) days prior to acceptance of the work, prepare and deliver to the Engineer three copies of a manual containing all information pertaining to and necessary for the operation and maintenance of all equipment provided under the Contract.

B. Format, organization, and contents of the manual shall be as specified in the order of the Sections of the Special Provisions. [Include all information required.]

1.10 PROGRESS PHOTOGRAPHS:

A. After construction operations have started at the site, have an average of ten color photographs taken each month until completion of the work. The actual number and location of views to be taken each month shall be as designated by the Engineer. The negatives and three prints of each photograph shall be submitted to the Engineer within ten days after taking. If a digital camera is used, the camera must have at least 12 megapixels and in lieu of the negative, a JPG fine (1:4 compression) and a digital negative (DNG) produced using Abode’s DNG converter are to be provided for each photograph.

B. Prints shall be standard commercial quality, 8 x 10 inches, on single weight glossy paper. Identify photographs with date, time, orientation and project identification in an information box, 1 $^{1}/_{2}$ x 3 $^{1}/_{2}$ inches in the lower right hand corner, typewritten and arranged as follows:

STATE OF MARYLAND DEPARTMENT OF TRANSPORTATION
MARYLAND TRANSIT ADMNISTRATION

CONTRACT NAME: _____
CONTRACT NO. _____
CONTRACTOR _____

PHOTOGRAPH NO. _____ DATE _____

(Information regarding view such as location, direction of sight and significant points of interest.)

C. Photographs shall be enclosed back-to-back in a double-faced plastic sleeve punched to fit standard three-ring binders. Enclose negatives in protective envelopes. JPG and DNG files can be provided on either CD-R or DVD media.

1.11 REQUEST FOR PROGRESS PAYMENT:

A. In accordance with Section GP-9 of the General Provisions, submit monthly requests for progress payment, based upon work accomplished during the previous month.

B. Support such requests by evidence that the work invoiced has been done.

1.12 ESTIMATED COST BREAKDOWN:

A. In accordance with Supplementary General Provisions, Article SGP-9.03, furnish a breakdown of Contract lump sum prices for which it is anticipated that partial payment will be requested by the Contractor.

B. Submit the estimated cost breakdown to the Engineer for approval at least 30 days prior to the anticipated partial payment request.

1.13 AS-BUILT DRAWINGS:

A. Field changes/variances from the details and dimensions shown on the plans shall be superimposed on the approved set of drawings in green by the Contractor. Old details, dimensions and notes shall not be erased, but X'd out in green. The date that the revision was made shall be indicated in the title block of each revised plan. The As-Built plans shall reflect any field revisions made during construction.

B. Submit a set of as-built drawing to engineer on monthly basis and final as-built drawings shall be submitted 45 calendar days after the completion of the contract.

PART 2: PRODUCTS

NOT USED

PART 3: EXECUTION

NOT USED

PART 4: MEASUREMENT AND PAYMENT

4.01 SUBMITTALS:

A. The work required under this Section will not be measured for payment.

B. All costs in connection herewith will not be paid for directly, but will be considered incidental to the item of work to which they pertain.

END OF SECTION

This page has been left blank intentionally

SECTION 01450

QUALITY ASSURANCE AND QUALITY CONTROL

PART 1: GENERAL

1.01 DESCRIPTION:

A. This Section specifies the Quality Assurance/Quality Control (QA/QC) requirements for the work performed under this Contract. These requirements encompass all actions involving selection of material sources and suppliers, inspection and testing of materials and samples, work placement procedures, workmanship, equipment calibration, use of Certificates of Compliance, implementation of procedures for audit, surveillance and corrective action, inspection, testing and commissioning. Additional QA/QC requirements are specified in individual sections of Special Provisions and Technical Provisions of the Contract Specifications.

B. Related Work Specified Elsewhere, but not limited to, the following:

1. G. P. – Section 6 – Control Of Material

2. Section 01110 – Summary Of Work

3. Section 01130 – Construction Procedures

4. Section 01300 – Submittals

5. Section 01600 – Products

4. Section 01780 - Contract Close Out

1.02 QUALITY ASSURANCE/QUALITY CONTROL PLAN:

A. It shall be the responsibility of the Contractor to provide and maintain a Contract Quality Control Plan (CQC Plan) for all work performed under the Contract. This requirement is independent of any acceptance inspection and testing performed by the Engineer and /or his testing agencies.

The CQC Plan shall conform to the requirements of this Special Provision Section and shall be designed and administered to assure that the Contractor's work, including work performed by the Contractor's suppliers and subcontractors, will be in full compliance with the latest version of applicable codes, special provisions, technical specifications and plans under the contract with respect to materials, workmanship,

construction, installation, finish, functional performance, testing, commissioning and identification. Further the CQC Plan shall encompass all actions involving selection of construction/installation material sources and suppliers, on-site and off-site fabrication of Contractor-furnished items to be included in the work, on-site and off-site production of construction materials, inspection and acceptance of owner furnished materials, work placement procedures, workmanship, inspection, testing and commissioning.

B. **Within seven (7) calendar days after issuance of Notice to Proceed** (NTP) for the Contract, the Contractor shall submit an "**Interim**" CQC Plan to the Engineer for approval. The interim plan shall cover all work to be performed under the Contract during the first sixty (60) calendar days of work.

Further, within thirty (30) calendar days after the issuance of the NTP, the Contractor shall submit a "**Detailed**" CQC Plan to the Engineer for approval. The detailed plan shall cover all work to be performed under the Contract.

The submission of the CQC plan shall be considered incidental to the bid item-Mobilization. The progress payments due to the Contractor may be withheld if the Contractor fails to submit conforming CQC Plans as scheduled herein.

C. With its Interim CQC Plan submission, the Contractor shall identify and designate a qualified individual (CQC Plan Manager) who shall be responsible for overall development and administration of the CQC Plan and submit the CQC Plan Manager's qualifications to the Engineer for approval. The CQC Plan Manager shall report directly to an executive officer of the Contractor's company and shall have the necessary authority to discharge his/her responsibilities. The CQC Plan Manager shall visit the project site on regular basis to assure proper administration of the CQC Plan.

For contracts in the amount of five million dollars ($5,000,000) and above, the CQC Plan Manager shall be at the project site on a full-time basis throughout the duration of the Contract and shall have no responsibilities other than those required by this Special Provision. However depending on the nature and complexity of the work to be performed under the Contract and/or instances of non-conforming work, the Engineer may require the CQC Plan Manager to be at the project site on a full time basis for contracts in the amount less than five million ($5,000,000) dollars.

D. With the interim CQC Plan submission, the Contractor shall identify qualified individuals and firms responsible for inspection and testing of on-site work (CQC Plan staff) and submit their qualifications to the Engineer for approval. The CQC Plan staff shall be sufficient to inspect

and test all items of work under the Contract and report directly to the CQC Plan Manager.

For contracts in the amount of five million dollars ($5,000,000) and above, the CQC Plan staff shall be at the project site on a full-time basis throughout the duration of the Contract and shall have no responsibilities other than those required by this Special Provision. Additionally for contracts in the amount of five million dollars ($5,000,000) and above CQC Plan staff shall include and identify appropriate testing personnel for each major discipline of work performed under the Contract. These major disciplines include, but are not limited to, civil, structural, mechanical, electrical, systems engineering, and specialty work.

E. The Contractors **Interim CQC Plan** must include as a minimum the following:

1. An organization chart showing the Contractors corporate organization that is involved with the on-site operations.

2. The Contractors on-site organization chart including a quality control organization showing the proposed CQC Plan Manager and CQC Staff.

3. Authority, duties and responsibilities of quality control personnel. A copy of the letter of direction to the Contractor's representative and CQC staff, which defines their duties, responsibilities, and delegated authorities, shall be provided to the Engineer.

4. Operational procedures for accomplishing and reviewing work, supervision, inspection, tests, certifications, documentation of QA/QC activities, including those of subcontractors for all on-site and off-site work under the contract.

5. Procedures for indoctrination and instruction of quality control personnel, construction supervisors, foremen, subcontractors and suppliers.

6. The coordinating procedures and authorities concerning the work activities performed off-site and not under the direct supervision of CQC Plan Manager.

7. A detailed test matrix and inspection schedule keyed to the individual Special Provisions and Technical Provisions of the Contract and covering the work to be performed during the first Sixty (60) calendar days from NTP.

F. The Contractor's **Detailed CQC Plan** submission shall include the following:

1. A detailed schedule/matrix of control testing and inspection keyed to the individual Special Provisions and Technical Provisions of the Contract and covering each item of the work. The Engineer shall approve the format of the test matrix. The test and inspection schedule shall cover all work to be performed under the Contract, including both on-site and off-site fabrication.

   Inspection and test records shall include, but not limited to, the factual evidence that tests have been made, the applicable type and number of tests, the dates and results of the tests, nature and number of observations made, the number and type of deficiencies found and proposed corrective actions to be taken. All records shall provide identification and signature of the individual in charge of the inspection, test, or other QA/QC activity. These records shall be certified by the CQC Manager and include, as a minimum, the results of:

   a. Inspection results, observations, conclusions and recommendations.

   b. Testing with reference to set-up conditions, observations and concerns.

   c. Fabrication procedures and controls.

   d. Identity of the Personnel present and their certification.

   e. Discrepant material details (including disposition records).

   The legible copies of these records must be furnished to the Engineer daily. The records shall cover all work performed subsequent to the previously furnished records and shall be verified by the CQC Plan Manager.

2. A minimum of three phases of inspection to be performed by the CQC Staff for all definable items of work. The phases are:

   a. Preparatory inspections shall be performed prior to beginning of each item of work and shall include a review of Contract requirements and CQC Plan test and inspection schedule mentioned above. Preparatory inspections shall include a physical examination of materials and equipment to assure that they conform to approved shop drawings or submittal data and are in required quantities to proceed with the work.

   b. Initial inspections shall be performed as soon as a representative portion of the work has been accomplished. Initial inspections shall verify compliance with Contract

requirements, establish acceptable levels of quality and workmanship, review quality control testing and confirm that defective, damaged or unapproved materials are not incorporated into the work.

c. Follow-up inspections shall be performed regularly by CQC Staff to assure continued compliance with the Contract requirements and established levels of quality and workmanship.

The Engineer shall be notified at least forty-eight (48) hours in advance of each preparatory and initial phase inspection. Additionally, the CQC Plan Manager shall insure that all phases of inspection are made a matter of record in the CQC Plan documentation.

3. The CQC Plan shall provide well-defined procedures and forms to include, but not limited to the following:

a. Identifying and evaluating quality-related problems.

b. Recommending solutions to quality-related problems and verifying that those problems are resolved.

c. Controlling further fabrication, delivery, or installation of nonconforming or deficient item(s) until disposition instructions have been obtained.

d. Conducting quality inspections, surveillance and compliance audits of subcontractors, suppliers/manufacturers on a scheduled and unscheduled basis.

e. Maintaining quality control reports, approved shop drawings and submittals, as-built drawings, changes to the drawings and specifications.

4. The CQC Plan shall also provide written procedures to include, but not be limited to:

a. Control of subcontractors, manufacturers /suppliers.

b. Production and process quality control.

c. Discrepant and nonconforming material control.

d. Functional testing.

e. Calibration and/or certification of Measuring and Test equipment

f. Shipping and receiving inspection of materials.

g. Procedures necessary to meet the requirements described under Contract Special Provision Section 01780 - Contract Close Out.

5. Approval of the Contractor's CQC Plan shall not relieve the Contractor of its responsibility to comply with the Contract requirements. The CQC Plan shall be revised or updated as directed by the Engineer. No additional cost or time extensions will be allowed for the Contractor's re-submission of rejected Interim or Detailed CQC Plans or for revising or updating of the detailed CQC Plan during the course of the contract, as directed by the Engineer.

1.03 SOURCE OF MATERIALS:

A. In accordance with General Provision Section GP-6 – Control of Material; the Contractor shall notify the Engineer in writing of sources from which he proposes to obtain material requiring approval, certification, or testing indicating details and characteristics.

B. Notification shall be made as soon as possible after the NTP for the Contract and at-least thirty (30) days prior to the intended usage date of that material.

1.04 CALIBRATION AND CERTIFICATION:

A. The CQC Plan shall include the procedures to provide and maintain gauges; measuring devices and test equipment necessary to assure that the article conforms to Contract requirements. These devices shall be calibrated in accordance with national standards and certifications. Calibration certificates shall be maintained current and submitted to the Engineer. Any equipment exceeding its required re-calibration date or that becomes damaged or otherwise unreliable, shall be isolated, tagged or marked to prevent its use without written permission of the Engineer.

1.05 MANUFACTURING CONTROL:

A. The CQC Plan shall include methods for ensuring that all machining, wiring, shaping, and all other basic processing, fabrication and production operations of any type are accomplished under controlled conditions, including documented work instructions, certified personnel, adequate production equipment, and any special working environment.

1.06 INSPECTION AND TEST STATUS:

A. The CQC Plan shall include methods for ensuring that all required inspections and tests are performed and that the status of each work

product, material item's inspections/tests is known. Identify nonconforming work product and material items by physical segregation and status indicators such as tags, markings, serialization, stamps, and/or inspection records. The identification system used shall ensure that only those work items that have passed inspection shall be used, shipped, or installed. The nonconforming work product and material items shall be removed from the project site and storage areas as soon as possible.

B. Work products, materials and/or equipment manufactured or assembled under this Contract shall be accepted for use or released for shipment, as appropriate, when the following conditions(s) have been met.

1. After inspection and/or release by the Engineer and/or certification by the Contractor that the work product or material item is complete and in compliance with the Contract specifications.

2. Upon request for acceptance or a release for shipment submitted by the Contractor and supported by a satisfactory inspection report or certification of compliance accompanied by certified copies of test data. The certificate of compliance shall clearly identify the work product or material item covered by the certificate and shall also contain the test date and the name and address of the organization performing the require tests, as applicable.

C. Supplies, services, materials, and products procured from suppliers and subcontractors shall conform to the Contract requirements and the approved CQC Plan. Inspect all supplies, materials, services, and products upon receipt.

1.07 NONCONFORMING ITEMS:

A. The CQC Plan Manager shall take prompt action to correct conditions that have resulted or may result in nonconforming materials, parts, components, installations or functions/operations. The CQC Plan Manager shall document the nonconforming work and efforts to correct the deficiencies and prevent its occurrence in future. The CQC Plan shall provide for:

1. Maintaining an effective and positive system for controlling nonconforming work product and material item(s) including procedures for identification, segregation, removal and disposition. Document the corrective actions and submit to the Engineer for approval.

2. Ensuring that all nonconforming items(s) shall be positively identified to prevent unauthorized use, shipment, or intermingling with conforming items. Disposition for the use or repair of nonconforming items shall require the Engineer's approval.

B. If the Contractor's work does not conform to the requirements of the Contract documents, the Engineer may issue a "Corrective Action" or " Nonconformance Report" to the Contractor. The Contractor must correct all deficiencies or otherwise respond to the report within seven (7) calendar days of issuance of report by the Engineer. The Contractor shall not build or conceal any feature of the work containing uncorrected defects. The Engineer may withhold monies due to the Contractor until the deficiencies are corrected or nonconformance issues resolved to the satisfaction of the Engineer.

C. If the Engineer determines that the CQC Plan and/or its administration are deficient in identification and correction of nonconforming work, the Engineer shall issue a "CQC Plan deficiency notice" identifying the specific deficiencies and required corrective actions. The Engineers corrective actions may include modification of the CQC Plan, replacement of the existing CQC Staff or supplementing of the CQC Staff, all at no additional time and cost to the Administration. The Contractor shall correct all the deficiencies as directed in writing by the Engineer. The Engineer may withhold monies due to the Contractor until the deficiencies are corrected.

1.08 HANDLING AND STORAGE:

A. The CQC Plan shall ensure that proper instructions are provided and followed for handling, storage, preservation, packaging, and shipping to protect the quality of products and to prevent damage, loss, deterioration, degradation, or substitution of products. Means shall be provided for any necessary protection against deterioration or damage to products in storage and handling.

1.09 UNACCEPTABLE WORK PRODUCTS AND MATERIAL ITEMS:

A. Work products or materials represented by installations or samples taken and tested in accordance with the specified test and failing to meet required values shall be considered to be defective regardless of prior tests or approvals.

B. Unless otherwise allowed by the Engineer, as set forth below, defective work products or material items shall be removed from the site as specified in the General Provisions for condemned material and with any tags, stamps or other markings implying conformance with specifications removed or obliterated.

C. Where defects can be corrected, the Contractor may propose corrective action in accordance with the manufacturer's recommendation or by other means as is deemed appropriate by the Engineer. The Engineer may approve the corrective action but does not assume responsibility for the

success thereof. Re-inspection and/or re-test may be made to determine acceptability of the material after corrective measures have been taken.

D. The cost of replacing, correcting and/or removal of defective work products or material items and of re-installation and re-testing replaced or replacement work products or materials shall be the responsibility of the Contractor.

E. The cost of repairing or replacing other work products or materials damaged by the installation, correction, and/or removal of defective materials is the responsibility of the Contractor.

1.10 ACCEPTANCE TESTING:

A. Acceptance testing is the testing of materials prior to their use in the work and also any testing deemed necessary by the Engineer for acceptance of the complete work. The Contractor will perform acceptance testing of materials and workmanship at the direction of the Engineer, in accordance with the Contract Documents. The Engineer reserves the right to request additional testing at any time to determine conformance with the Contract requirements.

B. Acceptance testing is not to be considered as a replacement for control testing conducted by the Contractor or manufacturer producing materials for the Contractor. Acceptance testing will be at the expense of the Contractor.

1.11 QUALITY CONTROL TESTING:

A. The quality control testing is the testing of specific work product or materials during placement, as specified in the various sections of the specifications to ensure compliance with the Contract Documents. The Contractor shall assume full responsibility for control testing and give sufficient notice to the Engineer to permit him to witness the tests. The quality control testing shall be at the expense of the Contractor and shall be performed by a certified independent testing laboratory that has been approved by the Engineer.

B. The Contractor shall submit the name, address, and qualifications together with the scope of proposed services of the proposed testing firm or individual to the Engineer for approval at least thirty (30) days prior to the scheduled commencement of any work involving such testing. Should the Contractor desire to use more than one firm for control testing, the required information shall be submitted for each proposed firm as specified herein.

C. The Contractor shall be responsible for furnishing all accessories, tools necessary to prepare and preserve the test samples as prescribed and delivering them to the approved testing laboratory.

D. The Contractor shall perform all quality control testing and furnish all equipment, instruments, qualified personnel and facilities necessary to perform all tests required by the Contract. All tests performed, and test results for each day shall be recorded in a daily report. These records shall remain complete and available to the Engineer at all times during the performance of the Contract and for a three-year period thereafter. Test records shall indicate the reference test, nature and number of observations made, and the number and type of deficiencies found.

E. All Field Tests and frequencies for civil construction work shall be in accordance with the District of Columbia Department of Public Works Standard Specifications for Highways and Structures unless otherwise directed by this Specification.

F. During the installation and testing phases of the work, a representative of the CQC Staff shall be present on site to oversee the and monitor the CQC Plan activities and verify installation and test activities are compliant with the requirements of this specification.

1.12 TEST REPORTS:

A. Within five days after completion of testing performed by or for the Contractor, submit five (5) copies of certified test results to the Engineer. Indicate test reports required to be submitted pursuant to Network analysis, if applicable and specified under Section 01300, Article 1.02, PROGRESS SCHEDULE. Identify test reports with the information specified for SAMPLES in SECTION 01300 Article 1.06 and additionally, the name and address of the organization performing the test, and the date of the tests.

B. The CQC Plan Manager shall submit on monthly basis, a record of all Control testing, Quality Assurance and Quality Control reports along with test results approved in the format described earlier under Article 1.02 F.1. This report shall be used to confirm and verify that the quantities in place for the completed work, for which the Contractor requests payment, have been adequately tested.

1.13 CONTRACT MONITORING:

A. The CQC Plan shall provide a schedule of planned and periodic Contractor internal audits to monitor and verify compliance with all aspects of CQC Plan. Qualified personnel not having direct responsibilities in the areas audited shall perform the audits. The CQC Plan shall also provide schedule of audits to be conducted by the CQC Plan manager for the work performed by the subcontractors, manufacturers/suppliers. The Engineer shall review the audit findings and determine the follow up action, including re-audit of deficient areas, if necessary. Five copies of the audit reports and follow up action reports

shall be submitted to the Engineer no later than fifteen (15) days after the audit for review and approval.

B. The Engineer has the right to monitor the methods and procedures used for production and/or QA/QC testing and shall be provided with access to all areas in which work for this Contract is being performed and at no additional cost to MTA. Furnish all reasonable means, including Shop Drawings, Working Drawings, test data, etc., to enable the Engineer to ascertain that materials and workmanship comply with the Contract specifications. The Engineer may perform periodic quality audits during the performance of the Contract. The Contractor shall take prompt corrective actions for items identified as not conforming to procedures approved under Contract terms.

1.14 CERTIFICATES OF COMPLIANCE:

A. The Contractor may use certificates of compliance for certain materials and products in lieu of the specified sampling and testing procedures. Submit any certificate required for demonstrating proof of compliance of materials with specification requirements in duplicate with each lot of material delivered to the work at least sixty days prior to the usage of the product/materials. The lot so certified shall be clearly identified by the certificate. Certificates shall be signed by an authorized representative of the producer or manufacturer and state that the material complies in all respects with the Contract requirements. The Network Analysis specified in Section 01300, Article 1.02, PROGRESS SCHEDULE, shall indicate the date scheduled for the submittal of certificates. In the case of multiple shipments, each of which is to be accompanied by a certificate of compliance, the scheduled date on the Network Analysis shall indicate the initial submittal only.

B. A certified copy of test results shall accompany the certificate of compliance. The certificate shall give the information specified for SAMPLES in Section 01300, Article 1.06 and in addition the name and address of the organization performing the tests, the date of the tests, and the quantity of the material shipped.

C. Materials used on the basis of a certificate of compliance may be sampled and tested at any time. The fact that material is used on the basis of a certificate of compliance shall not relieve the Contractor of responsibility for incorporating material in the work which conforms to the requirements of the Contract and any such material not conforming to such requirements will be subject to rejection, whether in place or not.

D. The Engineer reserves the right to refuse to permit the use of certain materials / supplies on the basis of a certificate of compliance.

1.15 SUBMITTALS:

A. The Contractor shall submit a Contract Quality Control Plan (CQC Plan) fully compliant with the requirements detailed under this Special Provision Section 01450 – Quality Assurance and Quality Control. Pursuant to the approval of the CQC Plan by the Engineer, the Contractor is responsible for fully implementing and maintaining the CQC Plan throughout the duration of the Contract.

B. Test Procedures for all tests identified in the CQC Plan.

C. Reports of factory and field inspections demonstrating compliance with the requirements specified in individual Special Provisions and Technical Provisions of the Contract Specifications.

D. Test schedules keyed to work activities planned under Contractors look ahead schedule.

PART 2: PRODUCTS

NOT USED

PART 3: EXECUTION

NOT USED

PART 4: MEASUREMENT AND PAYMENT

4.01 QUALITY ASSURANCE AND QUALITY CONTROL

A. Quality Assurance and Quality Control shall be measured by the Engineer. The allowance for Quality Assurance and Quality Control shall be divide by the total number of calendar days of Contract duration, as specified in Contract Special Provision Section 01110 – Summary of Work under "Completion Time and Liquidated Damages", to determine a daily rate for payment for successful performance. The Engineer, at his sole discretion, shall determine the Contractor's successful or unsuccessful performance with the requirements of the approved CQC Plan. The basis of unsuccessful performance shall be the issuance of a "CQC Plan Deficiency Notice" or a "Nonconformance Report" by the Engineer.

B. Quality Assurance and Quality Control will be paid as an allowance on an earned daily basis for each day the Contractor successfully performs all requirements of the approved CQC Plan. The Contractor will earn payment, on a daily basis, based for successful performance of all requirements of the approved CQC Plans. Payments will not be earned or made for any day that the Contractor fails to successfully perform the requirements of the approved CQC Plans.

END OF SECTION

SECTION 01500

TEMPORARY FACILITIES AND CONTROL

PART 1: GENERAL

1.01 DESCRIPTION:

A. This section specifies the general requirements for furnishing, installing, and operating temporary facilities and controls. This Section includes:

1. Temporary Utility Service
2. Temporary Sanitary Facilities
3. Project Identification
4. Community Relations
5. Work and Storage Areas
6. Safety Requirements
7. Pollution Abatement
8. Historical and Scientific Specimens
9. Salvage Material and Equipment
10. Temporary Construction Fence

B. Related work specified elsewhere:

1. Section 01570: Environmental Controls

1.02 TEMPORARY UTILITY SERVICE:

A. Determine the need for such temporary utility service as may be required to prosecute the work and make arrangements with utility companies for such service. Remove all materials and equipment involved with temporary utility service as part of final cleanup. All costs incurred in obtaining permits; utility service, including connection and disconnection; and furnishing, installing, maintaining, and removing such materials as may be required shall be borne by the Contractor.

1.03 TEMPORARY SANITARY FACILITIES:

A. The Contractor shall furnish for use of his work force the necessary toilet conveniences, secluded from public observation. Keep in a clean, sanitary condition. Comply with the requirements and regulations of the District of Columbia, Department of Health, and other agencies having jurisdiction.

1.04 PROJECT IDENTIFICATION:

A. FTA Project Signs: The requirements for the FTA project signs are specified in Section SGP-10 of the Supplementary General Provisions.

B. Field Office Signs: provide one sign each for the Engineer's Field Office and the Contractors Field Office to indicate the location of the offices. Use 1/2 or 3/4 inch thick exterior, A-B grade plywood, cut two (2) feet by four (4) feet long. Paint the sign with on coat of primer sealer and two coats of white semi-gloss enamel. Letter each sign with black enamel paint, using block letters at least four (4) inches high, with the Contract Name, Contract Number and the words ENGINEER's (or CONTRACTOR'S) FIELD OFFICE painted each on a separate line. Where the field office to be so identified is not readily visible from the project entrance, paint a directional arrow on the sign and locate the sign near the project entrance. The exact location of the field office signs and the proposed method of mounting shall be subject to the approval of the Engineer.

C. Contractor's Identification Signs: The Contractor may erect his own signs to identify himself and, if he wishes, his subcontractors. The overall size of the Contractor's identification signs shall not exceed four (4) feet by eight (8) feet wide. The exact location, method of mounting and mounting height of the Contractor's identification signs will be subject to the approval of the Engineer.

D. Sign Maintenance: Maintain all signs throughout the course of construction until final acceptance, keeping them clean, in good repair, and free of obstructions. Upon final acceptance of the work, remove and dispose of all signs.

1.05 COMMUNITY RELATIONS:

A. The Administration will establish a program of public contact for conducting effective relationships with communities and businesses in proximity to construction areas. As part of these programs the Contractor shall establish and maintain continuing liaison with persons occupying property or doing business in the immediate area of the Worksite for the purpose of minimizing inconveniences resulting from construction.

B. The Contractor shall contact those residents or businessmen who might reasonably be expected to be affected by the construction and make known to them the name of the Contractor representative on the Worksite with responsibility for community relations and explain to them the means by which the representative can be contacted expeditiously.

C. The Contractor shall, as part of the monthly progress status report specified in Section 01300, note and explain all community relations activities undertaken during the report period.

1.06 WORK AND STORAGE AREAS:

A. The Administration has gained agreement from Amtrak to allow the rights to utilize a portion of the Ivy City parking lot located north of the Wedge Yard. Refer to Appendix I for description of Amtrak property available to the Contractor for staging, laydown and storage during Construction. The Contractor shall erect a temporary fence to delineate his staging area. The Contractor shall be solely responsible for all costs of using this area, including but not limited to site cleanup, trash removal and subsequent restoration of these areas to their pre-use condition and to the satisfaction of the Engineer prior to Contract close out.

B. The Contractor shall submit to the engineer the contractors proposed work areas for storage of project materials and for parking of project construction equipment. These areas will be provided by the Contractor for the duration of construction at his own expense. Parking facilities for Contractor's personnel shall be the Contractor's responsibility.

1.07 SAFETY REQUIREMENTS:

A. Refer to the General Provisions Sections GP-7 for safety and health requirements.

B. Employ and assign to the work a full-time Safety Superintendent who has the specialized training and experience in construction safety supervision, is thoroughly familiar with OSHA requirements, and is acceptable to the Engineer. Employ the Safety Superintendent exclusively for purpose of supervising the safety of persons on or about the work and property affected thereby.

C. First Aid Stations: At site of the work, establish and fully equip a first aid station. Maintain a qualified first aid attendant on duty in the station at all times when the work is in progress, except when on emergency calls.

1.08 POLLUTION ABATEMENT:

A. General: Refer to General Provisions Section GP-7. Conduct operations in a manner to minimize pollution of the environment surrounding the area of work by every means possible. Apply specific controls as follows:

1. Material Transport: Truck leaving the site and entering paved public streets shall be cleaned of mud and dirt clinging to body and wheels of the vehicle. Trucks arriving at and leaving the site with materials shall be loaded in a manner which will prevent dropping of materials or debris on the streets. Contractor shall maintain a suitable vehicle cleaning and inspection installation with permanent crew for this purpose. Spills of materials in public areas shall be removed immediately at no additional cost to the Administration.

2. Waste Materials: No waste or erosion materials shall be allowed to enter natural or man-made water or sewage removal systems. Erosion materials from excavations, borrow areas or stockpiled fill shall be contained within the work area. Contractor shall develop methods for control of waste and erosion which shall include such means as filtration, settlement and manual removal.

3. Burning: No burning of waste will be allowed.

4. Dust Control: the Contractor shall at all times control the generation of dust by his operations. Control of dust is mandatory and shall be accomplished by water sprinkling or by other methods approved by the Engineer.

5. Noise Control:

a. General: Minimize noise caused by work operations, and provide working machinery and equipment fitted with efficient noise suppression devices. Employ other noise abatement measures necessary for protection of both employees and the public. In addition, restrict working hours and schedule operations in a manner that will minimize to the greatest extent feasible, disturbance to residents in the vicinity of the work. Provide protection against noise exposure for employees in accordance with GP 7.05.

b. Definitions:

i. Daytime, refers to the period from 7:00 a.m. to

10:00 p.m. local time daily except Sundays and legal holidays. Nighttime, refers to all other times including all day Sunday and legal holidays.

ii. Construction Limits are defined for the purpose of these noise control requirements as the Administrations right-of-way lines or property lines as indicated on the drawings.

iii. Zones, Special Zones and special Construction sites outside of Construction Limits shall be designated by the local agency having jurisdiction.

c. Monitoring: Monitor noise levels of work operations to assure compliance with the noise limitations contained herein. Retain record of noise measurements for inspection by the Engineer. Promptly inform the Engineer of any complaints received from the public regarding noise. Describe the action proposed and the schedule for implementation and subsequently inform the Engineer of the results of the action.

d. Measurement Procedure:

i. Except where otherwise indicated, perform all noise measurements using the A-weight network and (slow) response of an instrument complying with the criteria for Type 2 General Purpose sound level meter as described in ANSI S1.4. Measure impulsive or impact noises with an impulse sound level meter complying with the criteria of IEC 179 for impulse sound level meters. As an alternative procedure, a type 2 General Purpose sound level meter on C-weighting and (fast) response may be used to estimate peak values of impulsive or impact noises. Transient meter indications of 125 dbC (fast) or higher will be considered as indications of impulsive noise levels of 140 db or greater.

ii. Measure noise level at buildings affected acoustically by the Contractor's operations at points between three feet and six feet from the building face to minimize the effect of reflections.

iii. Measure noise levels at points on the outer boundaries of Construction Limits or Special Construction Sites for noise emanating from within.

iv. Where more than one criteria of noise limits are applicable, use the more restrictive requirement for determining compliance.

e. Noise Restrictions: Noise restrictions shall be in accordance with local ordinances.

B. Maintaining Flow of Sewers and Drains: The Contractor shall, at his own expense, provide for and maintain the flow of all sewers, drains, house or inlet connections, and all water courses which may be met during progress of the work. The Contractor shall not allow the contents of any sewer, drain, or house or inlet connection to flow into trenches. The Contractor shall, at his own expense, immediately remove from proximity of the work all offensive matter, using such precautions as are required by the Engineer.

1.09 HISTORICAL AND SCIENTIFIC SPECIMENS:

A. All articles of historical or scientific value, including coins, fossils, and articles of antiquity, which may be uncovered by Contractor during progress of the work, shall become the property of the Administration. Such findings shall be reported immediately to the Engineer who will determine method of removal, where necessary, and final disposition thereof.

1.10 SALVAGE MATERIALS AND EQUIPMENT:

A. The Contractor shall maintain adequate property control records for materials and equipment specified to be salvaged. Contractor shall be responsible for the adequate storage and protection of salvaged materials and equipment. The Contractor shall replace, at no cost to the Administration, salvage materials and equipment which are broken or damaged during the salvage operations as the result of the Contractor's negligence.

B. Salvage material not specified for reuse shall be the property of the Contractor and shall be removed from the site.

1.11 TEMPORARY CONSTRUCTION FENCE:

A. Plastic Safety Fence work shall consist of furnishing and installing new or like new temporary mesh construction fence. Orange fence will not be

allowed. All other colors are acceptable The fence shall be used where specified in the Contract Documents or where directed by the Engineer. This fence is not a safety barrier.

B. The Contractor shall remove and properly dispose of the temporary construction fence when no longer needed.

C. The Contractor shall maintain the temporary construction fence for the duration of the project.

PART 2: PRODUCTS

NOT USED

PART 3: EXECUTION

NOT USED

PART 4: MEASUREMENT AND PAYMENT

4.01 TEMPORARY FACILITIES AND CONTROLS:

A. The temporary facilities and controls work required under this Section will not be measured for payment, except as noted below.

B. All costs in connection herewith will not be paid for directly, but will be considered incidental to the item of work to which they pertain.

4.02 TEMPORARY CONSTRUCTION FENCE:

A. Temporary Construction Fence will be measured per linear foot.

B. Temporary Construction Fence will be paid once at the Contract unit price per linear foot, complete in place, accepted, which price and payment will be full compensation for all material, equipment, tools, labor, setting, maintenance, removal, storage, cleaning, and all work incidental to complete the item.

END OF SECTION

SECTION 01523

ENGINEER'S OFFICE TYPE 3

PART 1 – GENERAL

1.01 DESCRIPTION:

A. The work specified in this Section includes furnishing, cleaning and maintaining in good condition a suitable office at a location approved by the Engineer. The office shall be separated from any building used by the Contractor and shall be for the exclusive use of the Administration's personnel.

B. The office shall be served by municipal water and sewer facilities where available. If the facilities are not available, a neat sanitary toilet shall be provided services and maintained. Hand washing accommodations with a pressurized water system having a minimum pressure of 20 psi shall be provided. These facilities as described shall be for the exclusive use of State employees and shall meet the requirements of the State Department of Health and Mental Hygiene or other authorities having jurisdiction.

1.02 RELATED WORK:

A. The General Provisions of the contract, including General and Supplementary Conditions and Division 1 Specifications, apply to this section.

PART 2 – PRODUCTS

NOT USED

PART 3 – EXECUTION

3.01 ENGINEER'S FIELD OFFICE:

A. Provide a mobile unit or a building of 1750 square feet, or more, of usable floor space. The Facility shall be located near the construction site. The unit or building hereinafter called the Engineer's field office shall be complete in place as specified and ready for occupancy by the Administration 30 days after Notice To Proceed and shall remain in place and functioning until 90 days after the completion of the Contract. Provide six parking spaces for the exclusive use of the Administration and their representatives in administering the Contract and six additional parking spaces for visitors.

B. Provide the Engineer's field office with all the features specified herein

conforming to the local building codes and having the specified basic features with any substitute materials subject to approval by the Administration.

C. Maintain and service the Engineer's field office until all records pertinent to each segment of the Contract have been completed. After which time, the facility becomes the property of the Contractor and is to be removed.

D. Obtain and apply all costs for hauling, building and connection permits to the field office. Provide the field office with new commercial quality materials. Provide other features as follows:

1. The field office may be a temporary or permanent type facility with adequate insulation, flooring, lighting, potable water, utility service, heating and air conditioning.

2. Provide two restrooms in Facility complete with water closet and hot and cold water supply. Provide a lockable door on restroom.

3. Provide in the interior of the Facility at least four completely partitioned office rooms. These rooms shall be approximately 100 square feet with an interior doors. Provide a meeting room of approximately 250 square feet. Furnish the Administration at least three keys for each of the interior door locks.

4. All doors and windows to have an alarm system. Blinds shall be installed on all windows.

E. Provide and maintain as a minimum the following furniture and equipment for the Facility:

1. Four offices type desk having at least two drawers on each side and minimum top dimensions of 30 inches by 72 inches.

2. Six desk chairs.

3. Twenty comfortable, stackable chairs

4. Two four-drawer fire resistant filing cabinets (D Label) equipped with lock.

5. Four four-drawer cabinets with locks

6. Two plan racks having a capacity of twelve holders for full size engineering drawing

7. Eight utility tables, 30 inches high and having a top dimension not

less than 30 inches by 72 inches.

8. One slant top drafting table approximately 40 inches high at the front edge and having a top dimension not less than 37 inches by 72 inches

9. One stool of proper height for drafting table

10. Two closets, extending the full height from the floor to ceiling, measuring not less than 24 inches by 60 inches in plan, equipped with locks and at least two shelves

11. Utility cabinet with three adjustable shelves.

12. Three electric printing calculators with a minimum of eleven digits supplemented with an instruction manual

13. Two Fire Extinguisher – dry chemical, multi-purpose ABC minimum size 10 pounds (4.54-kg), equipped with a visual air pressure gauge. The fire extinguisher shall be checked monthly for stored pressure, etc.; also checked and tagged by a licensed company annually and after each use.

14. First Aid Kit – one equivalent to 24 unit first aid kit meeting Title 29 Code of Federal Regulations 1926.50(d)2. The first aid kit shall be checked monthly and replenished to full complement

15. Automated External Defibrillator (AED

    a. Medtronic, Model "Lifepak Express" or approved equal

    b. Safety Classification: IEC60601-1/EN60601-1

    c. American Heart Association Approved

16. Office Telephones: Four office telephone lines, and six handsets with multi-line and intercom buttons one of which shall be a speaker phone, one separate fax line; (total of five lines), installation and monthly telephone charges shall be the responsibility of the Contractor

17. One telephone answering machine

    a. The answering machine shall be equipped with tapes having the capability to record for a period of at least 30 minutes. These machines shall be voice-activated beeper less and shall play back recorded messages without dial

tones or pauses. The answering machines shall be capable of pre-recording an answering message up to 15 seconds in length.

b. If the telephone answering machine becomes defective, or is stolen, or for any reason does not function as intended, it shall be replaced with equal or better replacement unit at the Contractor's expense. Any defective equipment shall be replaced within 8 hours after the Engineer notifies the Contractor

18. One telephone plain paper facsimile machine

a. Shall meet and be compatible with CCITT Group Transmission standards (see specific line items for compatibility requirements)

b. Shall utilize public switched telephone networks and standard two- (2) wire leased through RJ11C jacks or similar devices

c. Shall transmit at 14,400 BPS or higher with automatic step down to compensate for phone line conditions

d. Shall transmit standard page 8½ x 11 inch at a speed of 20 seconds or less through a clean phone line, based on CCITT # 1 test chart

e. Shall have a minimum of two levels of resolution with contrast control:

i. Standard-200/96 lines

ii. Fine-200/96 lines

f. Self-test capability, provide activity reports and provide page headers, time and date

g. Shall use plain paper

h. Shall automatic document feeder tray (se specific requirements for each transceiver class)

i. Shall be supplied with handsets

j. Shall provide for automatic answer, receive and disconnect features

k. FCC registration number, ringer equivalence and connection circuitry shall be provided for each transceiver

l. Shall be equipped with speed dial feature for 20 numbers

m. Shall have a dedicated line separate from others

19. Cellular Telephone: Two portable cellular telephones with automobile charger and belt holster (with quick detach) for the exclusive use by the Administration. Provide installation and pay monthly charges for the duration of the Contract (Final Acceptance)

20. Cassette tape recorder with multiple microphones for recording meetings

21. One free-standing type copier with:

a. Automatic Document Feeder (ADF)

b. Thirty-five (35) pages per minute (ppm) or better

c. Separated sorting capability

d. Minimum of two separate paper drawers one of which is capable of accepting 11" x 17" sized paper.

e. Printer paper of 20 pound weight with 84 brightness or better through life of contract in sizes 8½" x 11", 8½" x 14" and 11" x 17"

f. Toner cartridges recommended by the original equipment manufacturer through life of contract

22. One secretary type desk with secretary's type chair

23. Microcomputer System and Accessories

a. Two Laptop Computers (Notebooks):

i. 15 inch or better LED Backlit Anti-Glare display capable of producing resolution of 1366x768 or better

ii. Intel Core i5-2520M (2.5GHz 3MB L3 Cache) or better Processor

iii. 4.0 GB DDR3 – 1333MHz RAM

iv. Integrated Intel Video Adapter

v. DVD Recordable Multiburner

vi. 500 GB Hard Drive, 7200 RPM or better

vii. 9-Cell Lithium-ion Battery and AC Pack

viii. Minimum 3 Standard Size USB Ports

ix. Carrying Case w/shoulder strap

x. USB Optical Mouse with wheel

xi. Built-In 3G (Minimum) Mobile Broadband Internet Access and associated data plan.

xii. WiFi capability (WPA2 security)

xiii. Software (Installed)

xiv. Microsoft Windows 7 Professional, 64-Bit

xv. Microsoft Office 2010 Professional

xvi. Adobe Acrobat Pro X

xvii. Internet Security Suite w/36-mos subscription

b. Four Desktop microcomputer systems

i. Intel Core i5-2400 Processor (3.1GHz, 6M Cache) or better

ii. 4 GB PC3-10600 SDRAM or better

iii. Integrated Intel Video Adapter

iv. 1 SATA 500GB, 7200RPM Hard Drive

v. Internal Memory Card Reader which supports most common formats

vi. A minimum of 1 parallel, 6 USB 2.0 ports,

vii. DVD-ROM Drive 16x Write / 48x Read (SATA) or better

viii. 3.5 inch 1.4 MB Disk Drive

ix. USB Optical Mouse with wheel

x. Integrated 10/100/1000 Ethernet adapter

xi. Flat panel active-matrix LCD monitor with a minimum screen size of 17 inches and a resolution of 1280 x 1024 or better

xii. USB keyboard or equivalent

xiii. Uninterruptible Power Supply (UPS) with automatic voltage regulation, surge protection up to 1000 volt amps, modem/fax surge protection, 6 outlet minimum, and software. 1 UPS should be supplied per desktop computer.

xiv. Digital Subscriber Line (DSL) or Fiber Optic equivalent high speed internet access capable of minimum 15/5 MBPS download/upload speed

c. Two HP (Hewlett Packard) or comparable laser printers with minimum of two paper trays, one printer with a supported paper size up to 8.5 x 14 inch with minimum resolution of 1200 x 1200 dpi (dots per inch) and wireless printing capabilities and one with a sheet size to 11 x 17 inch with a minimum resolution of 600 x 600 dpi, 25 ppm (pages per minute) and a minimum of 64 MB of RAM

d. Two HP (Hewlett Packard) or comparable color ink jet printer with minimum resolution of 600 x 600 dpi (dots per inch), 15 ppm (pages per minute) color, a minimum of 32 MB of RAM, capable of supporting paper size up to 11"x17". One of these printers should have wireless printing capabilities.

e. One Scanner with a minimum resolution of 800 dpi and a minimum accepted page size of 11 x 17 inch. Scanner shall include all cables and software necessary for the production of portable document format (PDF) files

f. Included Software:

i. Microsoft Windows 7 Professional Edition, 64-Bit

ii. Microsoft Office 2010 Professional installed

iii. Internet Security Suite w/36 mos subscription

iv. Adobe Acrobat Pro X installed

Original disks containing the software and manuals shall be provided

g. Digital camera with 10 megapixels or greater resolution, minimum 3X optical zoom, minimum of two compatible 16 GB memory cards for camera and all necessary software/hardware to interface with the supplied PC's

h. Contractor, as needed, shall supply all diskettes, CD's, and DVDs

i. Eight USB Flash Drives, Minimum 16GB storage space

j. Wireless dual-band router with WPA-2 encryption

24. Maintenance for computers, printers, facsimile machine and copiers during the life of the contract

25. One "Army litter" type stretcher

26. Bottled water cooler with bottled water service

27. One refrigerator with a capacity of 5 cubic feet

28. Two copies of OSHA Standards for the Construction Industry (29 CFR Part 1926), one copy to be placed in Resident Engineers office that will become property of the MTA at the conclusion of the Contract.

F. Provide maintenance, supplies and services as follows:

1. Clean field office, parking area and access road daily, including complete janitorial services and supplies. Make any required repairs to the field office when requested by the Administration

2. Furnish all utilities including telephone service

3. A parking area, with sufficient space for twelve (12) vehicles, shall be stabilized as directed by the Engineer in the area of the field

office

4. During other than normal working hours, provide security measures and area protection equivalent to that used for the Contractor's work site, shop and office

5. Daily cleaning service

6. Payment of all monthly service charges

G. Remove the field office and all furniture and equipment from the site at the time specified in Subsection 3.01 A. All materials, furniture and equipment shall become the property of the Contractor at the conclusion of the Contract with the exception of the digital camera, two laptop computers, two desktop computers, one laser printer, and automated external defibrillator which becomes the property of the Administration.

H. Restore the field office site to the original condition or better.

3.02 MOTOR VEHICLE:

A. The Contractor shall provide the following mid size motor vehicle for the exclusive use of the Administration and their representatives for the duration from Notice To Proceed (NTP) to Final Acceptance.

B. The vehicle shall be no older than one year and have no more than 10,000 miles on their odometers.

C. In addition to standard equipment the vehicle shall have at a minimum, the following equipment:

1. Factory-installed air conditioning

2. Factory-installed AM/FM radio

3. Automatic transmission

4. Power steering

5. Power brakes

6. Full size spare tire

7. First aid kit

8. Three road flares

9. A 5 ABC fire extinguisher

D. The Contractor shall pay for all expenses of the vehicle, including, but are not limited to, the following:

1. Insurance coverage

2. Fuel and oil

3. Routine maintenance, including cleaning

4. All repairs; and a "loaner" vehicle if repair takes longer than one day

5. Replacement of any used emergency equipment

E. The vehicle shall become the property of the contractor 45 Calendar Days after Final Acceptance.

PART 4 – MEASUREMENT AND PAYMENT

4.01 ENGINEER'S OFFICE TYPE 3:

A. The work required under this Section will not be measured for payment

B. All costs in connection with Engineer's Office Type 3 will be paid for at the rate of 50 percent of the lump sum bid price for the first month and the remainder paid in equal monthly installments for the duration of the Contract.

4.02 MOTOR VEHICLE:

A. The motor vehicles required under this Section will not be measured for payment but mileage for each vehicle will be recorded at the beginning and end of the contract for determining if excess mileage applies.

B. All costs for motor vehicles will be paid for in equal monthly installments equal to the bid price divided by the Contract duration in months. Any vehicle with accumulated mileage at the end of the Contract period in excess of 30,000 miles per year will be paid for at the prevailing State of Maryland rate for motor vehicle use.

END OF SECTION

SECTION 02465
DRILLED SHAFTS (CAISSONS)
PART 1: GENERAL

1.01 DESCRIPTION OF WORK

A. Provide all necessary labor, materials, equipment, services, transportation and permits required to complete the installation of all the drilled shafts and casings for the Pantograph Inspection Platforms and High Mast Lighting shown on the Contract Drawings, as specified herein, and as required by the project conditions.

B. The Work requires installation and testing of twelve (12) drilled shafts with a shaft diameter of 18 inches, seven (7) drilled shafts with a shaft diameter of 30 inches, and five (5) drilled shafts with a shaft diameter of 48 inches (for lighting) in accordance with the Contract Drawings.

C. The Work shall include, but shall not be limited to:

1. Furnishing, delivering, and installing of drilled shafts and casings.

2. Supply and delivery of all materials, equipment, and accessories.

3. Excavation of obstructions, if required.

4. Furnishing and installing Crosshole Sonic Logging (CSL) casings, and performing CSL testing on Caisson Nos. 1K, 2K, 3K, 4L, 5J, 6I & 7F, and on Lighting Caisson Nos. HM-1 through HM-5.

5. Removal of the temporary casings.

6. Placing reinforcement and concrete in the shafts.

7. Site clean-up and removal of all waste material.

8. Surveying to establish shaft locations, plumbness, and cutoff elevations.

1.02 RELATED SECTIONS

A. Section 03210 – Concrete Reinforcement

B. Section 03300 – Cast in Place Concrete

C. Section 03050 – Portland Cement Concrete

1.03 REFERENCES

A. American Concrete Institute (ACI)

1. ACI 336.1 - Standard Specifications for the Construction of Drilled Piers.

B. American Society of Testing and Materials (ASTM)

1. ASTM A36 Specification for Structural Steel

2. ASTM D6760 Test Method for Integrity Testing of Concrete Deep Foundations by Ultrasonic Crosshole Testing

C. America Railway Engineering and Maintenance of Way Association (AREMA)

1. Design for Railway Engineering, 2009, Volume 2

1.04 QUALIFICATIONS

A. The Contractor performing the work described in this specification shall have installed drilled shafts of diameter and length similar to those shown on the plans for a minimum of six (6) years prior to the bid date for this Project. The Contractor shall submit a list containing at least three (3) projects completed in the last three (3) years on which the Contractor has installed drilled shafts of a diameter and length similar to those shown on the plans. The list of projects shall contain names and phone numbers of the Owner's Representatives who can verify the Contractors' participation on those projects.

B. The Contractor shall assign a foreman to supervise the work with at least three (3) years of experience in the construction of drilled shafts. The Contractor shall retain the services of an independent testing laboratory, approved by the ADMINISTRATION, for performing the testing of the concrete placed within the drilled shafts. The Contractor shall retain the services of an approved CSL Subcontractor to perform CSL testing.

C. When specified, employ the services of a qualified geotechnical engineer for inspection and testing for installation of drilled shafts. Ensure that the geotechnical engineer is a professional engineer registered in the District of Columbia, has a demonstrated record of experience with similar drilled installations, and is approved prior to beginning auguring for the drilled shafts.

1.05 DESIGN AND PERFORMANCE REQUIREMENTS

A. Job Conditions:

1. The Contractor shall protect all adjacent structures and utilities from damage due to the work. Should uncharted or incorrectly charted structures or utilities be encountered during the Work, the Engineer shall be immediately notified and consulted for directions on how to proceed. The Contractor shall cooperate with all agencies and public and private utility companies in keeping their respective services and facilities in operation. Damaged structures and utilities shall be repaired by the Contractor to the satisfaction of the Engineer at no expense to the ADMINISTRATION.

2. Drilled shaft construction operations shall be performed only in the presence of the Engineer. The Contractor shall cooperate with and provide assistance to the Engineer in the performance of the Engineer's inspection and responsibilities.

3. The Contractor shall inspect the site to evaluate the conditions that will affect the work.

4. The Contractor shall be responsible for maintaining all areas in neat and unobstructed condition, both during and upon completion of the work. All waste material and construction debris shall become the property of the Contractor and shall be promptly removed from the site.

B. Site Conditions

1. Project site conditions are provided in the Contract Drawings.

2. The Contractor shall be responsible for the removal and disposal of excavated materials.

1.06 SUBMITTALS

A. The Contractor shall submit the following:

1. Proof of compliance with the experience requirements of 1.04 A. Prior to the start of work, the Contractor shall submit to the Engineer for review and approval the following:

a. A list containing at least (3) three projects on which the Contractor has successfully installed drilled shafts of diameters and lengths similar to those shown on the Contract Drawings. A brief description of each project and references to confirm this work shall be included for each project listed. As a minimum, the references shall include an individual's name,

current phone number and addresses of owners and engineers to contact.

b. The resume of the on-site foreman who will be assigned to the Project.

c. Names of the concrete supplier and independent testing laboratory to be used on the project.

d. Concrete test results from an independent testing laboratory including 3, 7 and 28 day compressive strengths for the mix to be used on the project.

2. A complete description of the equipment proposed for the work, including cranes, drills, augers, bailing buckets, final cleaning equipment, tremie or concrete pumps, casings, catalog cuts, etc; and methods of drilled shaft excavation.

3. Details of the concrete mix design and ingredients as required in Section 03300.

4. Shop drawings showing the details of the steel reinforcing cage, bracing and the design of spacing devices as required; shop drawings or catalog cuts of all shoes and splices.

5. Details of equipment and methods for tremie placement or direct pumping of concrete into the drilled shafts filled with water.

6. Record drawings showing the actual “as-built” location, horizontal alignment, elevation and dimensions of all drilled shafts.

7. Submit priorto commencement of work:

a. Proposed concrete mix and method of concrete placement.

b. Proposed steel reinforcement cage and CSL casing.

c. All shop drawings and supporting calculations shall be signed and sealed by an Engineer Registered in the District of Columbia.

8. The geotechnical engineer shall submit a plan containing the proposed methods to be used to inspect the drilled shafts as specified herein.

9. No work may proceed without approved shop drawings.

10. A preconstruction meeting with the Engineer is required.

1.07 QUALITY ASSURANCE

A. All materials and equipment shall comply with all the codes and specifications as herein referenced.

B. The Contractor shall be responsible for the proper operation, maintenance and calibration of equipment to prevent faulty and erroneous installation.

C. Drilled shaft construction inspection will be performed by the Engineer. The Contractor shall provide access to the work for inspection at all times. No drilled shafts shall be installed except in the presence of the Engineer.

D. The Engineer will monitor drilled shaft installation as follows:

1. Review the Contractor's submittals related to the drilled shaft installation.

2. Provide full-time observation of the drilled shaft installation, CSL testing, and verify that all tolerance criteria have been met.

3. Inspect and log the installation of all shafts.

a. The geotechnical engineer shall visually inspect the bottom of each drilled shaft and perform tests as necessary to verify the bearing capacity.

b. Drilled shafts shall be founded in material having the specified minimum design bearing capacity. The geotechnical engineer shall provide certification that the drilled shafts were properly drilled to a satisfactory depth and bearing.

E. Drilled shaft excavations shall be performed with an approved drilling rig. All equipment shall be maintained in satisfactory working condition and shall be operated by competent and experienced personnel throughout the operation.

F. Conduct layout work for each drilled shaft to the lines and levels required and provide final measurements of axial location, shaft diameter, bottom and top elevations, deviations from specified tolerances, and other data as required by the Contract Drawings.

1. Record and maintain information pertinent to each drilled shaft as described herein.

2. Provide dimensional record drawings showing the actual installed location of each drilled shaft, size and offset dimension and other data

as noted herein or as directed by the Engineer. Provide the actual top of drilled shaft elevation and vertical control bench mark used for the layout and detailed onto drawings signed and sealed by a Surveyor licensed in the District of Columbia.

1.08 DELIVERY, STORAGE AND HANDLING

A. Deliver materials to the project sites at such time to maintain continuity of operations as per the Project schedule.

B. Reinforcement cages shall be handled and lifted in a manner that will prevent overstresses, excessive bending stresses, damage, or mislocation.

C. Reinforcement cages are to be stacked and blocked where they are stored so that they are adequately protected from damage.

PART 2: PRODUCTS

2.01 MATERIALS

A. Concrete:

1. Concrete shall conform to the requirements of Section 03300. Concrete shall have a minimum 28-day compressive strength of 3,500 psi and a slump in the range of 6 to 8 inches, unless otherwise shown on the Contract Drawings.

B. Reinforcing Steel: As specified in Section 03210.

C. Grout: Mixture of one part Portland cement to one part sand with sufficient water to provide a slump not to exceed 9 inches

D. Casings: Use materials as specified in ASTM A 252, Grade 2. Ensure that the casing is capable of withstanding handling and driving stresses and the pressures of the concrete and surrounding earth. Use a casing with an inside diameter that is at least as large as the indicated shaft size. The Contractor may increase the size of the casing to facilitate construction operations.

E. Steel Cutting Shoe: ASTM A148, Grade 90-60. Cutting shoe shall have a smooth flush outer perimeter to prevent over reaming.

PART 3: EXECUTION

3.01 EXAMINATION

A. The Contractor shall visit and inspect the Project Site. The Contractor is responsible for locating existing underground utilities in the areas of the Work. Prior to performing any work, the Contractor shall expose and provide adequate support and protection of existing utilities and structures.

3.02 INSTALLATION

A. DRILLED SHAFT EXCAVATION

1. Contractor shall not start excavation of the drilled shafts until the anchor bolt assembly required for the installation of the column has been delivered to the site.

2. Prior to drilled shaft excavation, the Contractor shall locate and pre-excavate to expose the existing utilities within the shaft work area, and provide support and protection as necessary so as not to adversely affect the integrity of the utilities due to construction activities. The excavation and support methods shall be approved by the Engineer.

3. Excavation for shafts shall be advanced by rotary drilling methods approved by the Engineer and which do not permit loss of ground and will not adversely affect existing utilities and adjacent structures. Equipment used shall be capable of excavating through the type of materials expected to be encountered, including boulders, rubble, and other obstructions, if present.

4. Use drilling tools and excavation procedures that minimize negative pressure in the excavation that might induce soil heave into the bottom of the excavation. At completion of the excavation, clean the shaft bottom with an air-lift system or a clean-out bucket equipped with a one-way flap gate that prevents spoil in the bucket from re-entering the excavation.

5. The drilled shaft excavations shall be of the size and dimension and shall be carried to the depth shown on the Contract Drawings.

6. Temporary casing indicated on the Contract Drawings shall be advanced by rotary drilling methods that do not create void space outside the casing. Installation of casing utilizing driving or vibratory methods will not be permitted. Where soil conditions will permit heave of soil or flow of water into the bottom of the casing, drilling fluid shall be introduced into the casing and maintained at a level above the ambient ground water level.

7. Drilling ahead of the casing shall not be allowed, except where the soils below the bottom of the casing are self-supporting. In soils that are sensitive to disturbance, the casing shall be advanced by methods

that do not disturb or displace the adjacent ground, including cleaning out the casing as it is advanced to prevent formation of a soil plug.

8. Steel pipe casing shall be flush-joint type with sufficient strength to withstand handling stresses, concrete pressure, and surrounding earth and/or fluid pressures. The casing shall be clean and watertight. The diameter of the casing shall not be less than the specified diameter of the completed drilled shaft and shall conform to that shown on the Contract Drawings.

9. Drilled shafts shall not be installed using external flush.

10. Each excavated shaft will be examined by the Engineer upon completion of excavation.

11. All excavated materials shall be disposed of away from the Project site.

12. Construction of the drilled shafts shall be performed so that placement of the reinforcing steel cages and concrete is a continuous operation.

13. Approved hardened steel cutting shoes shall be welded to the bottom of each steel casing.

14. When drilling through boulders or other hard material, care shall be taken to prevent damage to the cutting shoe or deformation of the steel casing.

15. The Contractor shall remove all soil or other foreign matter so as to provide a clean bearing surface at the bottom.

16. Shaft bottoms shall be video inspected for approval by the Engineer. The video inspection will be provided by the Contractor utilizing a remotely operated camera capable of observing bottom conditions and measuring sediment under water. Five locations within each shaft shall be inspected, three or more of the locations shall have less than a ½ inch of sediment and the remaining locations shall have less than 1 inch of sediment.

17. The drilled shaft tip elevations indicated on the Contract drawings are approximate and are based on design analysis from available subsurface exploration data. Actual tip elevations shall be determined by the Engineer during construction and shall be based on actual soil conditions encountered in the field.

B. CASING

1. Temporary casing shall be used where specified by the Contract Documents. The casing shall be continuous between top and bottom elevations prescribed in the Contract Drawings.

2. Casing Removal:

   a. Where temporary casing is to be removed, the head of concrete inside the casing must be adequate to preclude infiltration of water and sluffage of the shaft face and sides.

   b. Elapse time from beginning of concrete placement in cased portion of shaft, until extraction of casing is begun, shall not exceed one hour.

   c. Extreme care shall be taken when a casing is removed to prevent subsidence of the surrounding ground if this condition is critical due to the presence of surrounding structures or utilities.

   d. Elevation of top of steel cage shall be carefully checked before and after casing extraction. The top of the concrete shall not raise during extraction of casing.

C. OBSTRUCTIONS

1. Surface and subsurface obstructions at drilled shaft locations shall be removed or penetrated by the Contractor. Such obstructions may include man-made materials such as rubble and natural materials such as boulders. Special procedures and/or tools shall be employed by the Contractor if the hole cannot be advanced using conventional soil and rock augers, drilling buckets and/or under reaming tools. Such special procedures/tools may include, but are not limited to: chisels, boulder breakers, core barrels, air tools, hand excavation, temporary casing, and increasing the hole diameter. Blasting shall not be permitted.

2. Removal of obstructions, including all labor, materials, and equipment necessary to complete the work, shall be considered incidental to the installation of the drilled shafts and no separate payment will be made for such work.

D. REINFORCING STEEL

1. The reinforcing steel cage, consisting of longitudinal bars, ties, cage stiffener bars, spacers, centralizers, and other necessary appurtenances, shall be completely assembled and placed as a unit immediately after the shaft excavation is inspected and accepted, and prior to concrete placement.

a. Reinforcing steel shall be free of mud, oil, or other coatings that adversely affect bond. Reinforcing bars shall be placed as shown on the Contract Drawings.

b. The reinforcing cages, including splices, shall be detailed and submitted for the Engineer's approval. Cages shall be braced to retain their configuration throughout the placement of concrete.

c. Spacers

1) Rolling spacers for reinforcing steel shall be used to assure the correct spacing exists between the reinforcing steel and the shaft casing or side of shaft excavation. Concrete spacers or other approved non-corrosive spacing devices shall be used at sufficient intervals, near the bottom and along the shaft at intervals not exceeding 10 feet, to ensure concentric location of the cage within the shaft excavation. When the vertical steel is greater than one inch in diameter, the maximum spacing may be increased to 15 feet. As a minimum, a set of spacers shall be provided within 2 feet of both the top and bottom of the shaft. In addition, one set of spacers shall be provided at both 2 feet above and below each change in shaft diameter. Non-corrosive spacers shall be provided at a minimum of one spacer per 30 inches of circumference of cage with a minimum of three at each level to maintain the required reinforcement clearances. The spacers shall be of adequate dimension to maintain the specified clearance between the outside of the reinforcing cage and the side of the excavated hole or casing.

2) Concrete spacers and bottom supports shall be constructed of concrete equal in quality and durability to the concrete specified for the shaft. Spacers fabricated from reinforcing steel shall be epoxy coated.

d. Reinforcing Ties, Splices and Clearances

1) The reinforcing steel in the shaft shall be double-wire tied and supported so that the reinforcing steel will remain within allowable tolerances given in the Contract Drawings and Documents.

2) Mechanical bar splices shall be staggered such that no more than 50 percent of the splices are within a 2-lap

splice distance. Welding of reinforcing steel will not be permitted. The reinforcing steel cage shall have sufficient rigidity to prevent racking or permanent deformations during delivery or installation. The Contractor must not yield or deform the rebar cages during lifting, handling, and placement.

e. Bottom Supports

1) Approved non-corrosive bottom supports shall be provided for the reinforcing cage to ensure that the reinforcing is the correct distance above the bottom of shaft. The bottom supports shall not be used to support the weight of the cage. In the event that the shaft has been excavated below the anticipated tip elevation, the reinforcing cage shall be extended at the lower tip end by lap lengths for No. 11 bars or smaller or by use of mechanical connectors.

2) Approved cylindrical concrete feet (bottom supports) shall be provided to insure that the bottom of the cage is maintained at the proper distance above the base. With approval from the Engineer, mechanical bar splices meeting the requirements specified in the Contract Documents may be used.

f. Protection of Reinforcing Cage

1) The reinforcing cage bottom supports shall be positioned such that the reinforcing steel is not allowed to come into contact with the soil or rock and to ensure that the bottom of the cage is maintained at the proper distance above the base as identified in the Contract Documents or as directed by the Engineer.

g. Check of Tolerances for Placement of Reinforcing Cage

1) The elevation of the top of the reinforcing cage shall be checked before and after the concrete is placed. The reinforcing cage shall be maintained within the specified tolerances, and the Contractor shall make corrections to those tolerances, as required, to the satisfaction of the Engineer. No additional shafts shall be constructed until the Contractor has modified the reinforcing cage support to obtain the required tolerances.

E. CONCRETE PLACEMENT

1. Immediately prior to positioning the reinforcing cage, clean the bottom of shaft excavation and inspect per 3.02.A.15. Concrete shall be placed immediately after examination and approval by the Engineer of the excavated shaft and positioning of the reinforcing cage.

2. Concrete shall be placed in such a manner that will preclude segregation of aggregate, infiltration of water, or any other occurrence which will tend to decrease the strength of the concrete or the integrity of the finished shaft.

3. Concrete in shafts filled with water shall be placed by a tremie or pump line as described herein and in accordance with Section 03300. The minimum inside diameter of a tremie line shall be eight (8) inches and four (4) inches for a pump line. The outside of the line shall be smooth so that there is no possibility of a projection becoming hooked on the reinforcing cage as the line is withdrawn during concrete placement. The line shall be clean and watertight. The wall thickness of the line shall be sufficient to provide the necessary strength and stiffness. The line shall be deployed so that there is minimum contamination of the concrete.

4. The bottom of the tremie or pump line shall be sealed with a diaphragm or a plate that is pushed away by the hydrostatic pressure in the concrete-filled line when the line is raised slightly from the bottom of the shaft excavation. The bottom of the line shall then be kept a minimum of five (5) feet below the top of the column of fresh concrete. The concrete shall be placed in a continuous operation until drilled shaft is completed.

5. Contractor shall provide back up equipment to ensure that concrete is placed continuously. There shall be no more than 45 minutes gap in the placement of one layer of concrete on top of another layer.

F. ANCHOR BOLT ASSEMBLY

1. The anchor bolt assembly for the columns will be furnished by the Contractor.

2. The anchor bolt assembly shall be installed by the contractor after the reinforcing steel cage has been installed. The anchor bolt assembly shall be held in place by a template that hold the bolts firmly in place and does not obstructs the placement of the concrete.

3.03 WELDING AND SPLICING

A. Perform all welding in accordance with requirements for shielded metal arc welding of AWS D1.1.

B. Only use welders qualified by tests prescribed in AWS D1.1, as applicable.

3.04 QUALITY CONTROLS

A. CSL testing shall be performed by the CSL Subcontractor retained by the Contractor.

B. Inspection

1. Cooperate with the Engineer and furnish services as he may require for inspecting and obtaining data.

2. The Contractor will keep records of each drilled shaft installed. Such records will include the following data:

a. Date of drilling; concrete placement

b. Drilled shaft designation

c. Type and size of drilled shaft

d. Elevation of ground surface

e. Elevation of bottom of drilled shaft

f. Length of casing

g. Log of drilling operations and materials encountered

h. Concrete composition and measured slump

i. Method of concrete placement

j. Volume of concrete placed

k. Log of concrete placement operations

l. Results of integrity testing

m. Deviation of completed drilled shaft from specified location and alignment

n. Description of any grouting operations to repair drilled shaft

3. In addition to all other inspection requirements for concrete as specified in this Section and in Section 03300, the Engineer may direct that cores be obtained to check on the quality of concrete placed.

4. Shaft bottoms shall be video inspected and approved by the Engineer. The video inspection will be provided by the Contractor.

C. Final Survey:

1. The "as-built" plan location, plumbness and cut-off elevation of each drilled shaft shall be determined by a District of Columbia licensed surveyor and the results submitted to the Engineer. The survey shall show drilled shaft number, cut-off elevation as installed, plumbness, and deviation(s) from the plan location. The survey plan shall be submitted after the test drilled shafts have been installed.

3.05 ACCEPTANCE OF DRILLED SHAFTS

A. A comparison of the computed theoretical excavation volume with the actual volume of concrete placed shall be made. A plot of depth versus volume shall be computed. The Contractor shall provide cooperation and whatever assistance is necessary to accurately monitor the volume of concrete placed at all times during the pour.

B. Unacceptable drilled shafts are shafts that are installed out of position, alignment, at the wrong top or bottom elevation, damaged or not constructed in accordance with these specifications or as indicated by the results of integrity testing or other examination by the Engineer. The Engineer, at his discretion, may evaluate the magnitude of loads, either lateral or axial, that can be supported by the "as-built" drilled shaft.

C. Rejection of a shaft based on the shaft integrity testing shall require conclusive evidence that a defect exists in the shaft which will result in inadequate or unsafe performance under service loads. If the CSL records are complex or inconclusive, the Engineer may require additional testing to confirm the location of the defect. The Engineer may also require coring or excavation of the shaft to verify shaft conditions. If a defect is confirmed, the Contractor shall pay for all coring or excavation costs, including grouting of all core holes. If no defect is encountered, the ADMINISTRATION will pay for all coring or excavation costs, including grouting all core holes.

D. Should it be determined that the "as-built" drilled shaft is unacceptable, the Contractor shall repair the shaft, to the satisfaction of the Engineer, so that it will conform to the specified requirements at no additional cost to the ADMINISTRATION.

E. For each unaccepted drilled shaft, the Contractor shall submit a written plan of action to the Engineer for approval, showing how to correct the problem and prevent its reoccurrence. The drilled shaft shall be repaired, augmented or replaced to the satisfaction of the Engineer.

F. To mitigate and/or to remedy unaccepted drilled shafts, the Contractor may be required to provide additional drilled shafts or supplement drilled shafts to meet the specified requirements and as directed by the Engineer at no cost to the ADMINISTRATION. Once the Engineer has rejected a drilled shaft, the construction of all other drilled shafts shall be discontinued until the Contractor demonstrates the adequacy of the shaft construction method and any subsequent method changes to the satisfaction of the Engineer.

G. When otherwise acceptably installed drilled shafts fail to satisfy the specified tolerances (location, elevation or dimensions), the Contractor shall provide an accurate survey to the Engineer.

3.06 INTEGRITY TESTING OF CONCRETE

A. Crosshole Sonic Logging (CSL) of Drilled Shafts

CSL testing will be provided by a specialty CSL Subcontractor retained by the Contractor. The CSL Subcontractor shall have a minimum of 3 years of experience in testing shafts similar to those shown on the plans. CSL may only be performed in the presence of the Engineer.

By sending ultrasonic pulses through the concrete from a probe placed in an access tube to another probe in a parallel tube, the CSL procedure inspects the drilled shaft concrete quality and structural integrity. The time between pulse generation and signal reception ("First Arrival Time" or "FAT") and the strength of the received signal gives a relative measure of the quality of concrete between transmitter and receiver. Dividing the distance between transmitter and receiver by the FAT value yields the approximate concrete wave speed which also is an indicator of concrete quality. Non-uniformities such as contaminated or soft concrete, honeycombing, voids and inclusions exhibit delayed arrival times with reduced signal strength.

1. General Requirements

a. The Contractor shall perform non-destructive integrity testing on Caisson Nos. 1K, 2K, 3K, 4L, 5J, 6I, & 7F and on Lighting Caisson Nos. HM-1 through HM-5 using the crosshole sonic logging (CSL) method for concrete drilled shafts in accordance with ASTM D 6760. The tests shall be conducted as indicated on the Contract Drawings and Contract Documents, or as directed by the Engineer. Sonic logging measurements and data

interpretation shall be performed by a CSL Subcontractor retained by the Contractor. The Contractor shall provide reasonable access to the shaft top for performance of the CSL testing.

b. Information on the shaft bottom and top elevations and/or length, along with construction dates shall be provided to the Engineer and the testing organization before the CSL tests are performed. CSL tests shall be conducted between pairs of tubes. The testing organization shall test all principle diagonals through the center and between each tube pair around the perimeter of all tested shafts. Additional logs shall be conducted at no additional cost in the event anomalies are detected.

c. The drilled shaft shall be tested between 3 and 7 days after concrete placement, and after the concrete has achieved a minimum compressive strength of 0.66 x f'c. The Engineer may specify a longer minimum time if concrete mix designs or other factors result in slower setting concrete.

d. Submit the test results, analysis, and interpretation for the shafts to the Engineer within five (5) calendar days of testing. The Engineer will determine final acceptance of each shaft, based on the CSL test results and analysis for the tested shafts.

2. Installation of Pipes

a. The Contractor shall furnish and install 2-inch nominal inside diameter Schedule 40 black steel pipes free of paint or other coatings, for use in sonic testing of each drilled shaft. The pipes shall be sufficiently regular and free from defects to permit the free and unobstructed passage of the probes. The pipe shall be installed such that all internal joints are flush. Stiffening devices such as mandrels, tape or similar material to seal the joints shall not be used. Pipe shall be watertight with clean internal and external faces, the latter to ensure a good bond between the concrete and the pipes. The pipes shall be fitted with a screw-on watertight shoe and cap and shall be securely fixed to the interior of the reinforcement cage with a minimum cover of 3 inches from the shaft periphery. The pipes shall be as near to parallel as possible, equally spaced and vertical. It is the Contractor's responsibility to adequately support/brace the pipes for the full height of the drilled shaft. In addition to the design reinforcement required in the drilled shaft (shown on the Contract Drawings), additional bracing may be necessary to adequately support the pipes, especially

if/where the pipes will not be in contact with the design reinforcement. Additional bracing must be shown on the shop drawings. Where several sections of pipe are required to reach the full length, joints shall be made watertight. The pipes shall be filled with water or antifreeze and plugged or capped before shaft concrete is poured. The upper end of the pipe shall not be left open after the pour. The pipes shall extend at least 3 feet above the top of the concrete in the shaft to compensate for water displaced by insertion and removal of the transmitter, receiver, and cable. The lower end of the pipes shall extend to 6 inches above the shaft bottom. Care shall be taken during the drilled shaft concrete pour to not damage the pipes. If a tremie is used, it shall not be permitted to rest on top of the pipe during the pour.

b. After completion of the CSL and final acceptance of the drilled shaft, grout tubes shall be lowered to the bottom of the CSL pipes to tremie grout the annular space in the pipes.

3. Sonic Logging Equipment

The sonic logging equipment furnished by the CSL Subcontractor shall consist of all necessary supplies, support equipment and power to perform the sonic logging testing requirements as described herein.

a. A microprocessor based CSL system for display of individual CSL records with a minimum 12 bit A/D converter and with a sampling frequency of at least 500,000 Hz, analog-digital conversion and recording of CSL data, analysis of receiver responses and printing of CSL logs.

b. Ultrasonic transmitter and receiver probes capable of producing records at a minimum frequency of 40,000 Hz with good signal amplitude and energy through good quality concrete, along with the triggering of the base recording system with the transmitted ultrasonic pulse.

c. An ultrasonic voltage pulser to excite the source with a synchronized triggering system to start the recording system.

d. A depth measurement device to determine and record depths.

e. Appropriate filter/amplification and cable systems for CSL testing.

f. The data acquisition system or associated software shall provide report quality plots of CSL measurements that include

identification of each individual test. The system shall store each log in digital format, with shaft identification, date, time and test details, including the transmitter and receiver gain.

4. Sonic Logging Test Procedure

a. Pipes shall be checked to ensure that they are free from blockages and are filled with water or antifreeze by the Contractor.

b. Levels shall be taken on top of each pipe. Each pipe shall be plumbed and the length shall be recorded by the Contractor.

c. Testing shall be performed between each pair of adjacent pipes around the shaft perimeter and also in pairing combinations between each pipe with all other pipes in the shaft.

d. All tests shall be carried out with the probes in the same horizontal plane unless the Engineer directs that defects be further evaluated with the probes on different horizontal planes.

e. The probes shall be raised simultaneously from the bottom of the pipes ensuring that all slack is taken out of the cables before the analyzer is switched on, and that the distance between transducers remains constant during the course of the test. The speed of ascent shall be less than 12 inches per second. Measurements shall be taken at 3-inch intervals or less. The Contractor shall assist the CSL Subcontractor in raising and lowering the probes

f. Anomalies indicated by a longer pulse first-arrival time (FAT) and significantly lower amplitude and energy signals shall be reported. If anomalies are detected, additional tests with two or more sources per receiver with vertical offsets of greater than or equal to 18 inches shall be conducted between the same tubes unless the anomaly is within 18 inches of the bottom of the shaft.

g. The Contractor shall provide accurate measurements of probe depths on the logs.

5. Record of CSL Testing to be provided by the Contractor.

a. Preliminary results of the testing shall be provided on site prior to the CSL Subcontractor leaving the site. A detailed CSL report and test data shall be submitted to the Engineer within

seven days of completing the CSL testing. The CSL report shall be signed and sealed by a Professional Engineer registered in the District of Columbia. The CSL report shall include, but is not limited to, the following:

1) Project identification and dates of testing.

2) A table and schematic showing shafts tested with accurate identification of tube coordinates and elevations.

3) Name of personnel that performed the tests and interpretation and those personnel's affiliation,

4) Equipment used.

5) Data logs, interpretation, analysis, and results.

   a) The data logs shall include XY plots of FAT, amplitude and velocity versus depth.

CSL data shall be processed to provide easy to understand 2D cross-sections between tubes for all tube pair combinations. These plots shall be annotated by the CSL Subcontractor as appropriate to delineate anomalous results. If offset surveys are performed as part of a 3D tomography, data plots shall include 3D volumetric images for the entire shaft, color-coded to indicate velocity variations along the shaft. Locations and geometry of anomalies or unconsolidated zones shall be identified in 3D color images with detailed discussion. The results for the CSL and 3D surveys shall be based on the percentage decrease in velocity as correlated to the following Concrete Condition Rating Criteria (CCRC). The velocity datum of good concrete shall be established by averaging the velocities in the good concrete along the drilled shaft. Deviations from the velocity datum shall be used for determining the Concrete Condition Rating.

Concrete Condition Rating Criteria			
Concrete Condition Rating	**Rating Symbol**	**Velocity Reduction**	**Indicative Results**
Good	G	0 to 10%	Acceptable concrete
Questionable	Q	10% to 25%	Minor concrete contamination or intrusion. Questionable quality concrete
Poor	P/D	>25%	Defects exist, possible water slurry contamination, soil intrusion, and or poor quality concrete.

Concrete Condition Rating Criteria			
Concrete Condition Rating	**Rating Symbol**	**Velocity Reduction**	**Indicative Results**
Water	W	V= 4,800 to 5,000 ft/sec	Water intrusion, or water filled gravel intrusion with few or no fines present.
No Signal	NS	No signal received	Soil intrusion or other severe defect absorbed the signal, tube debonding if near top.

6. Correction of Unacceptable Results

   a. The CSL Subcontractor shall immediately inform the Contractor of any suspected anomalies, honeycombing or poor concrete quality detected by CSL testing. The Contractor shall duly perform further tests as directed by the Engineer to evaluate the extent of any detected anomalies. Core drilling, or other investigative methods as approved by the Engineer, shall be performed to further investigate any anomalies.

   b. If a defect is confirmed, the Contractor shall bear all costs involved with the shaft coring, grouting and remediation. Within 14 days of the completion of testing, the Contractor shall provide a report signed and sealed by a Professional Engineer registered in the District of Columbia providing the results of the additional investigations and recommendations to accept or repair the shaft. The report shall also contain recommendations for modification of construction procedures to prevent defects for subsequent shaft installations. The dates of the completion of drilling, cleaning, steel placement and concrete pour shall also be provided. Construction above the top of shaft shall not be performed until the shaft has been accepted by the Engineer.

B. Core Drilling of Drilled Shaft Concrete

Drilled shafts that are determined to be unacceptable by the CSL tests may be cored to determine the quality of the shaft. The required number and depth of cores will be determined by the Engineer.

1. The core bit used for core drilling shall be warranted by the manufacturer as being adequately capable of coring concrete. A new bit or new core barrel will be required at any time the Engineer determines that the equipment may not be capable of obtaining good quality cores. The minimum diameter of the cores shall be 3.0 inches.

2. An accurate log of cores shall be kept and the cores shall be placed in a crate and properly marked showing the shaft depth at each interval of core recovery. The cores along with three copies of the coring log shall be transported to the Engineer or to the Engineer's specified lab for inspection.

3. Construction shall not proceed above a drilled shaft until the quality of the shaft, as represented by the core samples, is determined to be acceptable and notification to continue construction is provided by the Engineer.

4. If the Engineer determines that the drilled shaft is acceptable, the core holes and the CSL tubes shall be dewatered and grouted. The grout shall be of the same strength or higher than the strength of the concrete used in the original drilled shaft.

5. If the quality of the drilled shaft is determined to be unacceptable then the Contractor shall construct another foundation to carry the load that will be placed on the shaft or perform corrective work as required by the Engineer. This foundation or the corrective work shall be constructed without compensation from the ADMINISTRATION. The details of the replacement foundation shall be submitted to the Engineer for review and approval.

C. Crosshole Tomography

1. If the CSL records are inconclusive or show an anomaly, the Engineer may require coring or the performance of Crosshole Tomography to verify the shaft condition. The details of the Crosshole Tomography, if directed by the Engineer, shall be submitted to him for review and approval. The Crosshole Tomography analysis shall include the development of three dimensional volumetric images for the entire shaft. This shall be presented in color and coded to indicate variations in sonic velocity. The images and complete discussion of the data shall be presented in a report by the Crosshole Tomography testing firm. A Tomography Consultant shall be retained by the Contractor. All costs associated with the Crosshole Tomography shall be borne by the Contractor.

3.07 FIELD QUALITY CONTROL

A. The Contractor shall notify the Engineer at least one week in advance of all drilled shaft installation operations, including any work contemplated during shifts other than the normal day shift, and shall furnish and keep current a schedule of the installation program to facilitate the assignment of inspection personnel.

B. Alignment and Tolerances:

1. Horizontal - All drilled shafts shall be constructed in their designated locations and shall not deviate from the planned location by more than 3.0 inches in any direction. If conflicts arise with the locations, the Engineer shall be notified immediately.

2. After placing the rebar cage, ensure that the cage alignment is vertical.

3. After installation, ensure that the axial alignment of the drilled shafts does not deviate by more than 1.5 percent of the length based on the total length of the shaft.

4. Ensure that the final elevation of the drilled shaft head is no more than 1-1/2 inches above, or more than 4 inches below, the elevation shown on the Contract Drawings.

C. The Contractor shall provide the services of a licensed surveyor registered in the District of Columbia, approved by the Engineer, for the performance of the survey work.

D. Inspection

1. The Contractor shall cooperate with the Engineer and furnish services as may be required for inspecting and obtaining data. Typical of these services shall be the measurement of shaft lengths, inspecting the shaft bottom, inspecting the rebar cage, inspecting the monitoring instrumentation, inspecting the concrete properties, and obtaining the concrete depth and volume pumped during concrete placement.

3.08 PROTECTION

A. The Contractor shall protect structures and other construction from damage caused by the drilled shaft installation operations.

B. During all drilled shaft installations, the Contractor shall be responsible for taking all necessary precautions to protect existing and new structures.

PART 4: MEASUREMENT AND PAYMENT

4.01 18” DIAMETER CAISSON

A. 18” Diameter Caisson will be measured per linear.

B. 18” Diameter Caisson will be paid for at the Contract unit price per linear foot, complete in place accepted, which price shall be full compensation for

all material, equipment, tools, labor and all work incidental to complete the item as specified, including furnishing and setup of auguring equipment, auguring, drilling, excavating, dewatering, inspection, CSL testing, services of the shaft installer and geotechnical engineer, sleeves, reinforcement, concrete, and disposal of excess and unsuitable material.

4.02 30” DIAMETER CAISSON

A. 30” Diameter Caisson will be measured per linear foot.

B. 30” Diameter Caisson will be paid for at the Contract unit price per linear foot, complete in place accepted, which price shall be full compensation for all material, equipment, tools, labor and all work incidental to complete the item as specified, including furnishing and setup of auguring equipment, auguring, drilling, excavating, dewatering, inspection, CSL testing, services of the shaft installer and geotechnical engineer, sleeves, reinforcement, concrete, and disposal of excess and unsuitable material.

4.03 48” DIAMETER CAISSON

A. 48” Diameter Caisson will be measured per linear foot.

B. 48” Diameter Caisson will be paid for at the Contract unit price per linear foot, complete in place accepted, which price shall be full compensation for all material, equipment, tools, labor and all work incidental to complete the item as specified, including furnishing and setup of auguring equipment, auguring, drilling, excavating, dewatering, inspection, CSL testing, services of the shaft installer and geotechnical engineer, sleeves, reinforcement, concrete, and disposal of excess and unsuitable material.

END OF SECTION

SECTION 02510

WATER DISTRIBUTION SYSTEM

PART 1: GENERAL

1.01 DESCRIPTION

A. This item shall consist of furnishing and installing a water distribution system for the Wedge Yard as shown on the Contract Drawings. The water distribution system shall include but not limited to coordinating water distribution system installation with the District of Columbia Water and Sewer Authority (DCWASA) Master Standard Specifications, obtaining any permits and approvals required for installation of a private water distribution system and paying all necessary permit fees, water piping, fittings and all materials, and incidentals in accordance with DCWASA Standard Specifications, details and as shown on the Contract Drawings and as specified herein.

B. This work also includes install concrete encasement for water main pipes installed underneath the railroad tracks.

C. No work on this project will be performed by “DCWASA”. Work specified in the DCWASA Specifications to be performed by DCWASA shall be interpreted to be performed by the Contractor, and all references to “at no cost to DCWASA” shall mean “at no cost to MTA”.

D. This Section includes requirements to construct, test, and chlorinate ductile and gray iron piping for a water supply and distribution system to the limits indicated on the Contract Drawings and as specified in DCWASA Standard Specifications Section 02610, PIPE WATER MAIN-DUCTILE IRON.

E. After installation of fire hydrants, contractor shall conduct a flow test on each fire hydrant to ensure adequate water supply from DCWASA for required Fire-Flow for fire on MARC rolling stock or building/garage. The testing of fire hydrants shall be witnessed and approved by DC fire code official

1.02 QUALITY CONTROL

A. For products specified herein, quality control shall be in accordance with Contract Specifications Section 01450, QUALITY ASSURANCE AND QUALITY CONTROL, DCWASA Standard Specifications Section 02610, PIPE WATER MAIN-DUCTILE IRON, DCWASA Standard Specifications Section 02640, GATE/BUTTERFLY VALVES, DCWASA Standard Specifications Section 02642, FIRE HYDRANTS, DCWASA Standard Specifications Section 02645, WATER METERS-FURNISH AND INSTALL, and DCWASA Standard

Specifications Section 02650, WATER SERVICES CONNECTIONS.

1.03 SUBMITTALS

A. For products specified herein, submittals shall be as specified in Contract Specifications Section 01300, SUBMITTALS DCWASA Standard Specifications Section 02610, PIPE WATER MAIN-DUCTILE IRON, DCWASA Standard Specifications Section 02640, GATE/BUTTERFLY VALVES, DCWASA Standard Specifications Section 02642, FIRE HYDRANTS, DCWASA Standard Specifications Section 02645, WATER METERS-FURNISH AND INSTALL, and DCWASA Standard Specifications Section 02650, WATER SERVICES CONNECTIONS.

1.04 DELIVERY, STORAGE AND HANDLING

A. Delivery, storage and handling of material specified herein shall as specified in DCWASA Standard Specifications Section 02610, PIPE WATER MAIN-DUCTILE IRON, DCWASA Standard Specifications Section 02640, GATE/BUTTERFLY VALVES, DCWASA Standard Specifications Section 02642, FIRE HYDRANTS, DCWASA Standard Specifications Section 02645, WATER METERS-FURNISH AND INSTALL, and DCWASA Standard Specifications Section 02650, WATER SERVICES CONNECTIONS.

PART 2: PRODUCTS

2.01 MATERIALS

A. Water Piping, Joints, and Fittings

1. Water Main Pipe

Water main piping shall be ductile iron meeting requirements of DCWASA Standard Specifications Section 02610, PIPE WATER MAIN-DUCTILE IRON. Pressure class of 4 inch to 8 inch diameter pipe shall be 350.

In addition to the cast markings required in AWWA C110, clearly mark on each fitting the year, month and date cast.

When flange fittings or connecting pieces are required, they shall meet requirements of AWWA C110. Flanges shall be cast integrally with body and shall have the same thickness over their entire circumference. Faces shall be perpendicular to axis of pipe. Bolt holes shall be equally spaced and shall straddle the centerline of the fitting. Provide all joint accessories required.

Ductile iron water pipe and fittings shall be polyethylene encased in

accordance with ANSI/AWWA C105, Method "A". Polyethylene material shall be in accordance with the provisions stated in ASTM A674.
Water pipe and fittings shall be manufactured by one of the following:

a. American Cast Iron Pipe Co.

b. Atlantic State Cast Iron Pipe Co.

c. Griffin Pipe Products Co.

d. McWane Cast Iron Pipe Co.

e. United States Pipe and Foundry

2. Water Service Pipe

Water Service Pipe shall be seamless copper water tube meeting the requirements of DCWASA Standard Specifications Section 02650, WATER SERVICES CONNECTIONS.

Service Pipe Coupling shall comply with D.C. Plumbing Code.

B. Joint Restraint - Ductile Iron Pipe

Water pipe joints shall be as specified in DCWASA Standard Specifications Section 02610, PIPE WATER MAIN-DUCTILE IRON.

C . Sleeve Type Couplings

Couplings shall be as specified in DCWASA Standard Specifications Section 02610, PIPE WATER MAIN-DUCTILE IRON.

D. Coating/Lining for Sleeve Type Couplings and other Steel Connections Exterior

Exterior coating of sleeve type couplings and exterior coating/lining of other steel connection parts shall be as specified in DCWASA Standard Specifications Section 02610, PIPE WATER MAIN-DUCTILE IRON.

E. Valves

Standard gate valves for the water main and fire hydrants shall be supplied, installed, tested, measured and paid in accordance with DCWASA Standard Specifications Section 02640, GATE/BUTTERFLY VALVES.

F. Valve Boxes

Valve boxes shall be manufactured by Bingham and Taylor or Russell Pipe and

Foundry, or approved equal. Valve boxes shall be installed in accordance with DCWASA Standard details.

G. Fire Hydrants

Fire hydrants shall be supplied, installed, tested and paid in accordance with DCWASA Standard Specifications Section 02642, FIRE HYDRANTS.

H. Yard Hydrants

1. Yard Hydrants shall be Antifreezing, Compression-Type Post Hydrant approved by FDA for potable water, and shall be Murdock M-NPL75 manufactured by Murdock or approved equal.

2. ever-operated hydrant shall be ASSE 1057 certified as a potable hydrant. Hydrant shall not operate using venturi action. Unit shall be capable of year-round use in freezing weather. Hydrant shall have a flow rate of 4.5 gpm minimum at 25 psi. Hydrant shall be serviceable from above grade.

3. Unit shall extend below grade level so that supply inlet, valve and reservoir are positioned below frost line. During shutoff, a piston shall draw water from the supply column into a reservoir. An air bypass shall be mounted in nozzle to aid evacuation of supply column. At the next usage, the piston shall expel the water in the reservoir thru the nozzle before fresh water flows. The water supply shall be protected against any surface or underground contamination. Unit shall extend below grade level so that centerline of supply inlet is positioned at or below frost line.

4. Valve shall be operated by lever handle spring-loaded for closure. Stock, top, base and handle shall be fabricated of heavy, one-piece iron castings finished with a heavy grade of oil-based green enamel. Solid brass castings in nozzle and inner supply assembly shall conform to ASTM standards B61 and B62. Lead-free castings shall be used in all waterways. Nozzle shall be threaded for 3/4" hose connection and shall include an ASSE 1011 vacuum breaker.

I. 6-inch Water Meter

The 6-inch water meter shall be 6-inch cast bronze Compound Series B81-NS Cold Water Meter by Badger Meter, Inc., or approved equal. To protect the measuring element, the meter shall be equipped with a 6-inch cast bronze strainer by Badger Meter, Inc. or approved equal.

For automatic meter reading purpose, the water meter shall include an Orion RTR Transmitter for metal lid applications by Badger Meter, Inc. or approved equal.

The RTR transmitter shall be pre-programmed by Energy Management Systems (Contact Andrew Marrow at (610) 296-2875 ext. 401), or other meter reading company as directed by the Engineer.

The water meter shall meet the specifications as listed follow:

Typical operating range (100% ± 1.5%)	¾ - 2000 GPM
Low Flow Registration	3/8 GPM
Maximum Continuous Flow	1500 GPM
Pressure Loss at Maximum Continuous Flow	9.3 PSI at 1500 GPM
Pressure Loss at Crossover	5 PSI
Minimum Crossover Accuracy	95%
Maximum operating pressure	150 psi
Maximum operating temperature	120° f (49° c)

The automatic meter reading transmitter shall meet the specifications as listed follow:

Operating temperature	- 40F to 140F (-40C to 60C)
Humidity	0% to 100% Condensing
Power Resources	3.6V 2.4Ah Lithium Batteries
Broadcast Technology	Nonlicensed, Bubble Up Technology
Leak Detection	Based on 24-Hour Time Period with Automatic Reset
Data Profile	Option to Store 21000 Consumption Readings

J. 8-inch Backflow Preventer Assembly

1. Backflow preventer assembly shall be Model 350DA Double Check Detector Assembly as manufactured by Wilkins A Zurn Company or approved equal for 8-inch pipe with OS&Y standard gate valves.

2. Backflow preventer shall comply with the following:

ASSE® Listed 1048 (Sizes 2 ½” thru 12”)
CSA® Certified B64.5 (Sizes 2 ½” thru 8”)
AWWA Compliant C510 (Sizes 2 ½” thru 12”)
UL® Classified (Sizes 2 ½” thru 12”)
C-UL® Classified (Sizes 2 ½” thru 12”)
FM® Approved (Sizes 2 ½” thru 10”)
NYC MEA 147-99-M Vol 4 (2-1/2” – 10’)
Approved by the Foundation for Cross Connection Control and Hydraulic Research at the University of Southern California (Sizes 2 ½” thru 12”)

3. Materials shall comply with the following:

Main Valve Body	Ductile Iron ASTM A 536 Grade 4
Access Covers	Ductile Iron ASTM A 536 Grade 4
Coatings	FDA Approved Fusion Epoxy Finish
Internals	Stainless Steel, 300 Series
	NORYL™, NSF Listed
Fasteners	Stainless Steel, 300 Series
Elastomers	EPDM (FDA Approved)
	Buna Nitrile (FDA Approved)
Polymers	NORYL™, NSF Listed
Springs	Stainless Steel, 300 Series

4. The 8-inch preventer shall meet the following requirements:

Maximum working water pressure	175 PSI
Maximum working water temperature	140°F
Hydrostatic test pressure	350 PSI
End connections (Flanged)	ANSI B16.1 Class 125

K. Cast-in-Place concrete shall meet the requirements of Contract Specifications Section 03300, CAST-IN-PLACE CONCRETE, fc = 3500 psi.

L. Masonry work shall meet the requirements of Division 4 of the DCWASA Standard Specifications.

M. Precast concrete shall meet the requirements of Contract Specifications Section 03400, PRECAST CONCRETE, fc = 4500 psi.

N. Granular Bedding shall meet the requirements of Contract Specifications Section 02720, AGGREGATE BASE COURSE.

O. Wood for blocking, valve, and meter box installation shall be as shown on DCWASA Standard Details and shall be pressure treated with chromated copper arsenate meeting requirements of AWPA-C1.

P. Bituminous coatings shall be coal tar epoxy conforming to the requirements of AWWA C203 and jurisdictional Health Department requirements.

Q. Connection Appurtenances shall meet the requirements of the DCWASA Standard Specifications Section 02610, PIPE WATER MAIN-DUCTILE IRON.

R. Miscellaneous metal connectors and appurtenances shall meet the requirements of the DCWASA Standard Specifications Section 02610, PIPE WATER MAIN-DUCTILE IRON, and the DCWASA Standard Details and Drawings.

S. Mortar bonding admixture shall meet the requirements of the DCWASA Standard Specifications Section 04100, MORTAR.

T. Curing compound shall meet the requirements of ASTM C-309, Type 2, Class B white pigmented resin based for use with parging and precast grade rings.

U. Nonshrink Grout shall meet the requirements of DDOT Standard Specifications, Section 806.05.

V. Flowable Fill shall meet the requirement of ACI 229. Flowable Fill shall have a minimum 28 day strength of 50 psi but not to exceed 150 psi.

W. PVC Casing Pipe for water service line installed under yard tracks shall meet requirements of ASTM D3034, wall thickness classification SDR-35.

PART 3: EXECUTION

3.01 WATER MAIN AND FITTINGS

A. The water distribution system is located on private property and permits from DCWASA are not anticipated. However, if any permits, co-ordination, and/or approvals are required, the contractor shall be responsible for all such permit application and co-ordination and paying necessary fees. The Contractor shall install the water main as shown on the Contract Drawings.

B. The Contractor shall be responsible for providing freeze protection for water mains. Freeze protection shall be provided for all piping subject to freezing using Raychem heat tracing tape or approved equal, and insulation, controlled via thermostat.

C. The Contractor shall conduct hydrostatic tests in accordance with DCWASA Standard Specifications Section 02610, PIPE WATER MAIN-DUCTILE IRON. The Contractor shall retest until specified conditions are met, to the satisfaction of the Engineer, at no costs to MTA.

D. The Contractor shall disinfect water piping in accordance with DCWASA Standard Specifications Section 02610, PIPE WATER MAIN-DUCTILE IRON. Should residual or bacteriological analyses not be satisfactory to the engineer, the Contractor shall rechlorinate the main and notify the Engineer to take new samples. Rechlorination including cost of taking samples shall be at the Contractor’s expense. Water piping shall not be placed in service until the analysis is complete and approved by the Engineer.

3.02 TRENCH EXCAVATION AND BACKFILL

A. Before excavating, dig test pits as directed by the Engineer in accordance with DCWASA Standard Specifications Section 02225, TEST PITS, to determine size and type of existing pipe to which the proposed pipe will connect and its exact location. Adjust pipeline alignment and profile as required to connect to existing mains, subject to the approval of the Engineer. Before pipe installation, excavate sufficient trench in advance and/or test pits so that reasonable changes in line and grade can be made where the location of existing structures vary from that shown and to assure that no unforeseeable obstructions exist. Work occasioned by failure to take such precautions shall be performed at no cost to MTA.

B. Excavate trenches to 24-inch plus the outside diameter of pipe at locations shown on the Contract Drawings. Provide uniform, continuous support for pipe on required bedding as shown on the Contract Drawings. Provide bedding as shown on the Contract Drawings and as specified in Contract Specifications Section 02720, AGGREGATE BASE COURSE.

C. Trench excavation will be unclassified and shall consist of all material encountered to he lines, grades, and sections shown on the plans and as directed by the Engineer. Water piping shall have a minimum ground cover of 48-inches.

D. The Contractor shall support the sides and ends of all excavation where necessary, with braces, sheeting, shoring or stringers, trench boxes or other acceptable excavation support systems. All work shall be performed in strict accordance with OSHA requirements. The support of the trench shall be the sole responsibility of the Contractor.

E. The Contractor shall grade the site as necessary to prevent surface water from flowing into the trench or other utility excavations. The Contractor shall provide all necessary temporary surface drainage as required and keep the same operating to the satisfaction of the Engineer until permanent drainage or finished grading and permanent surface stabilization has been completed. Damming or ponding of water in gutters or storm drains will not be permitted. It shall be the Contractor's responsibility to adequately control water that may be present in the excavation. The Contractor shall provide for the disposal of water removed from the excavation in such a manner as not to cause damage to public or private property or to any portion of the work. Under no circumstances shall the use of any area by the public be impeded on account of the actions of the Contractor. The Contractor shall not discharge any flushing or ground water or any material of any nature into the existing sanitary sewer system during the construction of the facilities. All water shall be discharged through an approved sediment control device. The costs of dewatering trench excavations will not be paid for directly, but will be included in prices bid for other related items.

F. Trench bedding, backfill and restoration shall be as specified in Contract Drawings 02720, AGGREGATE BASE COURSE.

3.03 PIPE INSTALLATION

A. Ductile and gray iron pipe, fittings, valves and appurtenances shall be handled in accordance with AWWA C600 and in accordance with DCWASA Standard Specifications 02610, PIPE WATER MAIN-DUCTILE IRON. If damage or coating abrasion occurs and is deemed repairable, it shall be repaired as directed by the Engineer in accordance with approved manufacturer's recommendations. Cement mortar lining damage shall be repaired solely by personnel trained by the manufacturer of the pipe, fitting or valve. Repairs shall be performed in the presence of the Engineer. If damage is not repairable in the opinion of the Engineer, such pipe, fittings, valve or appurtenance will be rejected and shall be removed and replaced at Contractor's expense.

B. Ductile iron water pipe and fittings shall be polyethylene encased in accordance with ANSI/AWWA C105, Method “A”.

C. Foreign matter shall be cleaned and removed from each pipe, fitting and valve before placing in the trench. The interior of the pipe shall be kept clean during installation and thereafter. Remove pipe, fittings and valves upon contamination of the interior with oil, gasoline, kerosene or other material that damages the cement lining and replace at no cost to the Owner. Should foreign material or contaminates be observed in previously installed pipe, fittings, and valves cease work until foreign material is removed or contaminated pipe fittings, and valves are decontaminated or replaced. Open ends of pipes and fittings shall be closed with a watertight seal during periods when work is not proceeding.

D. No pipe shall be laid upon a foundation neither into which frost has penetrated, nor at any time when there is danger of ice formation or frost penetration at the bottom of the excavation. In freezing weather, open trench length shall be kept to a minimum and the excavation promptly backfilled after the pipe has been installed.

E. Each pipe shall be bedded on a solid foundation acceptable to the Engineer. Bell holes shall be dug sufficiently large to insure that joints are properly made and the pipe is firmly bedded for the full length of the barrel.

F. All pipes shall be installed in accordance with the recommendations of the pipe manufacturer and as specified herein. These recommendations shall include maximum trench width, if more restrictive than that shown in the Details included herein; bedding requirements; backfill material and compaction, where applicable. In addition, the following shall apply unless otherwise noted.

G. Proper and suitable tools and appliances for safe and convenient handling and joining of pipes and fittings shall be used. Slings shall not damage the exteriors and/or coating of the pipe, and shall be wide canvas or rubber-coated belts.

H. Pipe and fittings shall be carefully handled and lowered into the trench. Pipe shall be installed with special care to insure that each length abuts against the next to produce no shoulder or unevenness of any kind along the inside bottom half of the pipeline. No wedging or blocking will be permitted in installing any pipe unless directed by written order or permission in writing is obtained from the Engineer.

I. No pipe shall be brought into position until the preceding length has been thoroughly bedded and secured in place. Care shall be used to secure water tightness and prevent damage, to, or disturbing of, the joints during the refilling process. After pipes have been installed and joints have been made, there shall be no walking on or working over the pipe, except as may be necessary in tamping the backfill material, until the backfill is at least 2 feet over the top of the pipe.

J. The pipes shall be thoroughly cleaned before prior to installation and shall remain clean until final acceptance of the completed work. Open ends of all pipelines shall be provided with a stopper carefully fitted to keep dirt and other foreign substances from entering. This stopper shall be kept in the end of the pipeline at all times when installation is not in progress.

K. Whenever a pipe requires cutting, to fit into the line or bring it to the required location, the work shall be done in a manner that leaves a smooth, square end. Any lining damage due to field cutting shall be repaired by the Contractor as specified herein.

L. Align pipes so that no shoulder or unevenness results on the inside of the main. Cutting, where required, shall be smooth and at right angles to the pipe axis. Cutting shall be performed at no cost to the Commission. Secure pipes, fittings and valves in place in the manner indicated on the Drawings. Where indicated, provide erosion checks and concrete anchors in accordance with the DCWASA Standard Details. If no method for securing pipe is indicated, secure with wooden wedges or braces and concrete to the satisfaction of the Engineer.

M. Unless otherwise indicated, joint openings and horizontal or vertical deflections shall not exceed the allowances specified in DCWASA Standard Specifications Section 02610, PIPE WATER MAIN-DUCTILE IRON. Horizontal or vertical deflections greater than those specified shall be made with fittings approved by the Engineer.

3.04 BUTTRESSES AND HARNESSED JOINTS

A. Provisions for counteracting all expected thrust due to static and dynamic forces including surge at bends, tees, reducers, valves, fire hydrants and dead-ends shall be made whether or not shown on the Contract Drawings.

B. Harnessed Joints

1. The Contractor shall furnish and install harnessed joints to withstand all expected forces in accordance with the Contract Drawings and DCWASA Standard Details.

2. Pipe in lengths of 18 feet or more shall be used on both sides of harnessed joint and within the limits as shown on the Contract Drawings.

3. If the Contractor for his convenience tests the pipeline before backfilling is complete, he shall provide adequate temporary blocking at no cost to the Owner.

4. Retainer glands shall be used for harnessing joints on ductile ion pipe where practicable, in accordance with the Standard Details.

5. Anchor couplings and anchoring tees may be used as shown on the Contract Drawings and Standard Details.

C. Thrust Blocks and Anchors

1. Provide thrust blocks and anchors as indicated on the Contract Drawings and directed by the Engineer in accordance with the details shown on the Contract Drawings. The Engineer will inspect and approve excavations before thrust blocks and anchors are placed.

2. The entire face of the excavation against which the thrust blocks will bear shall be firm bearing, flat and at proper angle to the pipeline and reaction force.

3. Provide wood forming for both sides of the thrust blocks and maintain dimensions shown on the Contract Drawings. Protect joint bolts from concrete.

3.05 JOINTS

A. Mechanical Joints

1. A mechanical joint is a bolted joint of the stuffing box type that consists of a bell cast integrally with the pipe or fitting having bolt holes, a rubber

gasket, follower gland with bolt holes, tee-head bolts and hexagonal nuts. Prior to assembling the joint clean both bell and plain end of rust and foreign matter.

2. Assemble the joint in accordance with AWWA C-111 and C-600 and as specified herein. Clean and lubricate joint surfaces. Place the gland on the plain end followed by the gasket and insert pipe into bell. Press gasket firmly and evenly into the bell recess to center the plain end in the bell. Keep the joint straight during assembly. Make deflection after joint assembly but before tightening bolts. Complete the joint by alternate tightening of bolts with a torque wrench set between 45-60 foot/pounds for 3-inch diameter, 75-90 foot/pounds for 4-inch through 24-inch diameter, 100-120 foot/pounds for 30-inch and 36-inch diameter and 120-150 for 42-inch and 48-inch diameter. Tighten the bolts so the gland and the face of the bell have approximately the same distance between them at all times.

3. Where satisfactory sealing of the joint is not attained at the maximum permissible torque, disassemble, reclean, and reassemble the joint with a new gasket.

B. Push-on Joints

1. A push-on joint is a single rubber gasket joint that is assembled by positioning the continuous rubber ring gasket in an annular recess in the pipe bell and then forcing the plain end into the bell. File or grind a bevel on the plain end of field cut pipe lengths to resemble the pipe as manufactured so the plain end will slip into the socket without hindrance or gasket damage. Place an identifying mark on pipe that is not furnished with a depth mark on the plain end to show the depth of the socket and to verify that pipe is fully set in the bell.

2. Assemble joints in accordance with AWWA C600 and as specified herein. Clean the inside of the bell and outside of the plain end to obtain clean, smooth surfaces free of foreign matter. Insert the gasket in the bell. Apply a thin film of gasket lubricant furnished by the joint manufacturer to the inside surface of the gasket and to the outside surface of the plain end. Push the plain end into the bell. Keep the joint straight while pushing. Complete the joint by forcing the spigot into the socket up the depth mark, using equipment designed for the purpose. Make deflection after joint is completely home.

C. Flanged joints.

1. A flanged joint consists of two flat-faced surfaces with gasket, bolts and

hexagonal nuts. Grease shall be removed from the flange surface using a solvent-soaked rag and wiped clean of all dirt and grit.

2. Flanges shall be accurately aligned, using a spirit level, and the pie properly supported before the gasket and bolts are inserted. The rubber gasket shall be carefully placed to insure full flow and proper sealing of the joint. Bolt threads shall be given a light coat of thread lubricant and then inserted and the nuts turned by hand. Bolts shall then be pulled up with a wrench employing the crossover method. Bolt lengths and required torques shall be in accordance with the manufacturer's requirements.

D. Mechanical Couplings

1. A mechanical coupling joint consists of a middle ring, two follower rings, two molded rubber gaskets, and cadmium plated bolts.

2. Assemble mechanical coupling joint by placing coupling pieces on pipe ends and then place pipe ends together. Slide middle ring so it is centered at the pipe ends juncture. Place gaskets and follower rings in place and bolt up. Tighten bolts to the torques recommended by the manufacturer. Coat entire assembled mechanical coupling with a bituminous coating.

E. Lead Joints

1. Provide lead joints for making hookups to existing water mains where bell and spigot joints are required and when directed by the Engineer.

2. Assemble joints in accordance with the AWWA C600 and as specified herein. Clean bell and spigot with a wire brush and obtain smooth surfaces free of rust and foreign materials. During cold weather, heat the ends of the pipe and insure their dryness. Center spigot in adjacent bell to provide uniform thickness of joint. When single strand packing is required, cut packing in one-piece lengths for each joint and place around spigot of pipe allowing a minimum two-inch lap. When more than one strand is required, cut lengths to meet without overlap. Place multiple strands with ends on opposite sides, not at top or bottom. Drive home each strand of packing separately with a roping tool and sufficiently compact packing to prevent lead from flowing through into the interior. Leave space in the bell of the pipe so that not less than three inches in depth will be occupied by lead.

3. Remove dross from lead before pouring. Fill each joint with one continuous pour using a runner fitted against the face of the bell and outside of pipes. Maintain temperature of lead by approved means. After cooling, caulk lead joints with pneumatic or hand tools until thoroughly

compacted and watertight. Caulk from the bottom up. Provide hard and even hammered finished surface.

3.06 FITTINGS AND VALVES

A. Install fittings and valves, where indicated on the Contract Drawings. Set fittings and valves and joint the pipe as hereinbefore specified. Where valves occur on the end of a pipeline, place a plug or blind flange and secure in the exposed bell before backfilling the trench.

B. Install valve boxes and provide extension stems where shown and required for nut operated valves not placed in valve vaults.

C. Set valve box at right angle to the water main, centered and plumb over the valve operating nut with box cover flush with the surface of the finished grade or as otherwise directed. When the valve operating nut is more than four feet below the box cover, provide an extension stem inside the valve box with operating nut not less than two feet or more than four feet below top of valve box cover. Support extension stem as required while maintaining operating nut in position. Before installation, exercise valve for proper working order. If valves are not operating properly, notify the Engineer immediately. Backfill and compact under and around valve boxes to ensure no vertical loads are transmitted to the valve operators or bonnets. When the valve box is located within an area where the surface is scheduled to be improved, provide a marker stake consisting of a piece of 2" x 4" lumber painted green a minimum of five feet long adjacent to the valve box with approximately three feet extended above the ground.

3.07 FIRE HYDRANTS

A. Install fire Antifreezing Compression Type Post hydrants where indicated on the Contract Drawings in accordance with the details shown on the contract. Set plumb at the elevation directed by the Engineer. Place the steamer outlet normal to the water main. Harness all hydrants to water main as shown on the DCWASA Standard Details.

B. Install fire Antifreezing Compression Type Post hydrants connection level, in accordance with manufacturer’s recommendations and the manner specified hereinafter for installing pipe.

3.08 CORPORATION STOP FOR CHLORINATION PURPOSES

A. Install one-inch diameter corporation stop and coupling in water mains for chlorination purposes, where directed by the Engineer. Number of corporation stops to be installed will be determined at the preconstruction meeting.

3.09 VALVE VAULTS AND MANHOLES

A. Provide valve vaults and manholes where shown on the Contract Drawings in accordance with applicable sections of the specifications and Standard Details. Where pipes penetrate vault and manhole walls, fill annular space between pipes and vault walls with mortar the full thickness of the wall. Do not complete to final grade until grading is complete and proper alignment is ensured. Set frames in full beds of mortar as shown on the DCWASA Standard Details and the Contract Drawings.

3.10 WATER SERVICE CONNECTIONS

A. Water Service Connections shall be installed in accordance of DC WASA Specifications Section 02650, WATER SERVICE CONNECTIONS.

B. Yard hydrant service pipe installed under yard tracks shall be place in 4” PVC casing pipe and the annular space between service pipe and PVC casing pipe shall be filled with flowable fill.

3.11 CONNECTIONS TO EXISTING LINES

A. Certain information is shown on the Contract Drawings relative to existing pipe and other construction. This information was transferred from existing records and is deemed to be reliable but the Owner does not warrant or guarantee the accuracy of the locations, dimensions or type of material as shown.

B. Prior to installing pipe under this Contract, the Contractor shall excavate test pits at all connections to existing water lines. The Engineer will examine the test pits and establish line and grade and determine material required at connections. Do not cut existing pipe closer than 18 inches to joint bell unless joint bell will be removed.

C. Notify the Engineer at least three working days prior to proposed connection construction. Make connections at time and in a manner approved by the Engineer.

D. The Owner will operate all valves necessary to shut down water mains for connection. The Owner will make every reasonable effort to provide a tight shut down but can not warrant that the mains will be dry and free from all leakage. The Contractor shall pump and provide dewatering as required to make necessary connections to existing water mains. Connections shall be made with the greatest possible speed, working more than eight hours, at nighttime or weekends when directed by the Engineer.

3.12 YARD HYDRANTS

A. Yard hydrants shall be installed in accordance with manufacturer's recommendations.

B. Utilize manufacturer's approved installation device to assure proper installation.

3.13 FIELD TESTING

A. The Contractor shall notify the Engineer, in writing, at the completion of backfill over water pipe and when the pipe installation is ready for testing. Unless otherwise indicated in the Contract Documents, the Contractor shall conduct hydrostatic tests at prevailing pressures as approved by the Engineer within three working days of said written notification.

B. Close ends of test sections with caps or plugs properly blocked or restrained to withstand pressures to be imposed.

C. The Contractor shall provide equipment for and conduct hydrostatic tests with pressures computed as described herein. Notify the Engineer when the pipe installation is ready for testing at least five days in advance of test. Set up testing equipment in accordance with DCWASA Standard Specifications. The tests conducted on ductile iron pipe shall meet the requirements of AWWA C600.

D. All visible leakage shall be eliminated. Should test results show displacement, damage, or leakage in excess of allowable amount, the Contractor shall repair the displacement and damage and eliminate the leakage. He shall retest until specified conditions are met, to the satisfaction of the Engineer, at no cost to the Owner.

3.14 WATER METER

A. Install and test the water meter and automatic meter reading transmitter as indicated on the plans and in accordance with manufacturer's recommendations and the DCWASA Specifications Section 02645, WATER METERS – FURNISH AND INSTALL.

3.15 8-INCH BACKFLOW PREVENTER ASSEMBLY:

A. Install backflow preventer assembly as indicated on the plans and in accordance with manufacturer's recommendation.

B. Test and provide certification that the backflow preventer assembly complies with manufacturer's specification and District of Columbia Title 21 DCMR

regulations. Testing agency shall have certification from DCWASA for testing of backflow preventer.

3.16 OPERATION AND MAINTENANCE MANUAL FOR WATER METER AND AUTOMATIC METER READING TRANSMITTER:

A. In addition to the copies required in Section 01300, SUBMITTALS, the Contractor shall submit a total of ten (10) hard copies and two (2) electronic, self-extracting copies on CD to the Engineer of a manual containing all information pertaining to the operation and maintenance of the Water Meter and the Automatic Meter Reading Transmitter, including battery replacement for the Transmitter. One CD copy shall be designated for use by the Systems Maintenance Training Dept.

B. Contractor shall submit the text portions of the CD in Word 2000 format or Adobe pdf file format. All drawings shall be submitted in AutoCAD format with a .dwg or .dxf file extension.

PART 4: MEASUREMENT AND PAYMENT

4.01 COORDINATION WITH DCWASA AND RELATED PERMITS FOR PRIVATE WATER SYSTEM

A. If required, coordination with DCWASA and Obtaining All Necessary Permits will not be measured for payment.

B. Coordination with DCWASA and Obtaining All Necessary Permits will not be paid for directly, but the cost will be incidental to the Water Distribution System items specified in the Contract Documents.

4.02 CONNECT TO EXISTING WATER MAIN:

A. Connect to Existing Water Main will not be measured for payment.

B. Connect to Existing Water Main will not be paid for directly, but the cost will be incidental to the contract price of pertinent water main pipe items specified in the Contract Documents.

4.03 EXCAVATION AND INCIDENTALS

A. Excavation, sheeting, shoring, dewatering, hauling, invert paving, storing, rehandling of material, removal and disposal of excess and unsuitable material, tamped fill, forming bed or foundation, bedding, backfill, compaction, inspection, joints, castings, and pipe connections will not be measured for payment.

B. Excavation, sheeting, shoring, dewatering, hauling, invert paving, storing, rehandling of material, removal and disposal of excess and unsuitable material,

tamped fill, forming bed or foundation, bedding, backfill, compaction, inspection, joints, castings, and pipe connections will not be paid for directly, but will be considered incidentals necessary for the work items specified in the Contract Documents .

4.04 8-INCH D.I.P. WATER MAIN

A. 8-Inch D.I.P. Water Main installed shall be measured per linear foot. The length shall be measured along the centerline of the pipe from end to end. All fittings, bends, caps, warning tapes, thrust blocks and anchors, and connecting to existing pipes and structures shall be included in the footage as typical pipe sections in the pipe being measured.

B. 8-Inch D.I.P. Water Main will be paid for at the contract unit price bid per linear foot, completed in place, accepted, which price shall be full compensation for furnishing all pipes, joints, fitting, specials and closure pieces, harnessing, lining and coating, additional disinfection tests subsequent to first test, chlorination, testing, excavation, backfill, compaction, and for all material, labor, equipment, tools, and incidentals necessary to complete the work.

4.05 6-INCH D.I.P. WATER MAIN

A. 6-Inch D.I.P. Water Main installed shall be measured per linear foot. The length shall be measured along the centerline of the pipe from end to end. All fittings, bends, caps, warning tapes, thrust blocks and anchors, and connecting to existing pipes and structures shall be included in the footage as typical pipe sections in the pipe being measured.

B. 6-Inch D.I.P. Water Main will be paid for at the contract unit price bid per linear foot, completed in place, accepted, which price shall be full compensation for furnishing all pipes, joints, fitting, specials and closure pieces, harnessing, lining and coating, additional disinfection tests subsequent to first test, chlorination, testing, excavation, backfill, compaction, and for all material, labor, equipment, tools, and incidentals necessary to complete the work.

4.06 4-INCH D.I.P. WATER MAIN

A. 4-Inch D.I.P. Water Main installed shall be measured per linear foot. The length shall be measured along the centerline of the pipe from end to end. All fittings, bends, caps, warning tapes, thrust blocks and anchors, and connecting to existing pipes and structures shall be included in the footage as typical pipe sections in the pipe being measured.

B. 4-Inch D.I.P. Water Main will be paid for at the contract unit price bid per linear foot, completed in place, accepted, which price shall be full compensation for furnishing all pipes, joints, fitting, specials and closure pieces, harnessing, lining

and coating, additional disinfection tests subsequent to first test, chlorination, testing, excavation, backfill, compaction, and for all material, labor, equipment, tools, and incidentals necessary to complete the work.

4.07 4-INCH GATE VALVE AND BOX

A. 4-Inch Gate Valve and Box will be measured per each.

B. 4-Inch Gate Valve and Box will be paid for at the contract unit price per each, complete in place, accepted, which price shall be full compensation for furnishing all materials, for all preparation, excavation, formwork, backfill, compaction, and for all labor, equipment, tools, and incidentals necessary to complete the work.

4.08 6-INCH GATE VALVE AND BOX

A. 6-Inch Gate Valve and Box will be measured per each.

B. 6-Inch Gate Valve and Box will be paid for at the contract unit price per each, complete in place, accepted, which price shall be full compensation for furnishing all materials, for all preparation, excavation, formwork, backfill, compaction and for all labor, equipment, tools, and incidentals necessary to complete the work.

4.09 8-INCH GATE VALVE AND BOX

A. 8-Inch Gate Valve and Box will be measured per each.

B. 8-Inch Gate Valve and Box will be paid for at the contract unit price per each, complete in place, accepted, which price shall be full compensation for furnishing all materials, for all preparation, excavation, formwork, backfill, compaction, and for all labor, equipment, tools, and incidentals necessary to complete the work.

4.10 FIRE HYDRANT:

A. Fire Hydrant will be measured per each.

B. Fire Hydrant will be paid for at the contract unit price per each, complete in place, accepted, which price will be full compensation for furnishing all materials and for preparation, excavation, formwork, backfill, compaction, and for all labor, equipment, tools, and incidentals necessary to complete the work.

4.11 YARD HYDRANT:

A. Yard Hydrant will be measured per each.

B. Yard Hydrant will be paid for at the contract unit price per each, complete in place, accepted, which price will be full compensation for the furnishing all

materials and for preparation, excavation, formwork, backfill, compaction, and for all labor, equipment, tools, and incidentals necessary to complete the work.

4.12 3/4-INCH COPPER SERVICE PIPE

A. 3/4-Inch Copper Service Pipe shall be measured per linear foot. The length shall be measured along the centerline of the pipe from end to end. All fittings, bends, caps, warning tapes, thrust blocks and anchors, and connecting to existing pipes and structures shall be included in the footage as typical pipe sections in the pipe being measured.

B. 3/4-Inch Copper Service Pipe will be paid for at the contract unit price bid per linear foot, completed in place, accepted, which price shall be full compensation for furnishing all pipes, joints, fitting, specials and closure pieces, harnessing, lining and coating, additional disinfection tests subsequent to first test, chlorination, testing, excavation, backfill, compaction, and for all material, labor, equipment, tools, and incidentals necessary to complete the work.

4.13 6-INCH WATER METER AND VAULT:

A. 6-Inch Water Meter and Vault will be measured per each.

B. 6-Inch Water Meter and Vault will be paid for at the contract unit price per each, complete in place, accepted, which price will full compensation for furnishing all materials, concrete, steel reinforcing, for all preparation, maintenance of traffic operations and materials, excavation, backfill, compaction, sheeting and shoring, manhole frame and cover, 6-inch meter and gate valves, Automatic Meter Reading Transmitter, pre-programming and testing of Automatic Meter Reading Transmitter, 6-inch D.I.P. and fittings, piers, dewatering, testing, and for all labor, equipment, tools, and incidentals necessary to complete the work.

4.14 CONCRETE ENCASEMENT:

A. Concrete Encasement for water distribution system pipes shall be measured per cubic yard.

B. Concrete Encasement for water distribution system pipes shall be paid for at contract unit price per cubic yard, completed in place, accepted, which payment will be full compensation for all concrete, excavation, forms, backfill, compaction, curing, disposal of excess or unsuitable material, and for all material, labor, equipment, tools, and incidentals necessary to complete the work.

4.15 FLOWABLE FILL:

A. Flowable Fill for water service pipes shall be measured per cubic yard.

B. Flowable Fill for water service pipes shall be paid for at contract unit price per cubic yard, completed in place, accepted, which payment will be full compensation for all flowable fill, excavation, forms, backfill, compaction, curing, disposal of excess or unsuitable material, and for all material, labor, equipment, tools, and incidentals necessary to complete the work. The 4” PVC casing pipe will not be measured but the cost will be incidental to the contract price of flowable fill.

4.16 8-INCH BACKFLOW PREVENTER ASSEMBLY AND VAULT:

A. 8-inch Backflow Preventer Assembly and Vault will be measured per each.

B. 8-inch Backflow Preventer Assembly and Vault will be paid for at contract unit price per each, complete in place, accepted, which price will be full compensation for furnishing all materials, concrete, steel reinforcing, for all preparation, maintenance of traffic operations and materials, excavations, backfill, compaction, sheeting and shoring, manhole frame and cover, 8-inch backflow preventer and gate valves inside vault, 8-inch D.I.P. and fittings, piers, dewatering, testing, manuals certification, training, and for all labor, equipment, tools, and incidentals necessary to complete the work.

END OF SECTION

SECTION 02530

SANITARY SEWER COLLECTION SYSTEM

PART 1: GENERAL

1.01 DESCRIPTION

A. This item shall consist of furnishing, installing and testing a sanitary sewer collection system for the storage yard as shown on the Contract Drawings. The sanitary sewer collection system shall include, but not necessarily be limited to, coordinating sanitary sewer collection system installation with the District of Columbia Water and Sewer Authority (DCWASA), obtaining all necessary permits and approvals from the DCWASA and paying all necessary permit fees, sanitary sewer piping, fittings and all materials and incidentals in accordance with DCWASA Standard Specifications Section 02730, and details and as shown on the Contract Drawings and as specified herein.

B. This work also includes install concrete encasement for sanitary sewer pipes installed underneath the railroad tracks.

C. No work on this project will be performed by “DCWASA”. Work specified in the DCWASA Specifications to be performed by DCWASA shall be interpreted to be performed by the Contractor, and all references to “at no cost to DCWASA” shall mean “at no cost to MTA”.

1.02 QUALITY CONTROL

A. Quality control shall be as specified in DCWASA Standard Specifications Section 02705, SEWER MANHOLES, DCWASA Standard Specifications Section 02730, SEWER PIPE, and Contract Specifications Section 01450, QUALITY ASSURANCE AND QUALITY CONTROL, for products specified herein.

1.03 SUBMITTALS

A. Shop Drawings

1. Shop drawings shall be submitted as specified in DCWASA Standard Specifications Section 02705, SEWER MANHOLES, DCWASA Standard Specifications Section 02730 SEWER PIPE, and Contract Specifications Section 01300, SUBMITTALS, for the various types of pipe, fittings, castings and frames, pre-cast or cast-in-place concrete structures, and manholes, and other materials or products intended to be supplied. The shop drawings shall include the following information: design computations for all structures, product information, material strength, “type” or “class”, joint type, and storage, handling and installation recommendations.

B. Certificates of Compliance

1. Certificates of compliance shall be submitted in accordance with Contract Specifications Section 01450, QUALITY ASSURANCE AND QUALITY CONTROL, for the various items intended to be supplied. The certificates shall state that the materials or products have been manufactured in accordance with the standard referenced.

C. Operation and Maintenance Manuals

1. Contractor shall submit an Operation and Maintenance Manual for the Grinder Pump.

D. Training Courses and training materials

1. Contractor shall conduct Training Courses for operation and maintenance of Grinder Pump and submit training materials for review and approval.

1.04 DELIVERY, STORAGE AND HANDLING

A. Delivery, storage and handling of material specified herein shall as specified in DCWASA Standard Specifications Section 02705, SEWER MANHOLES, and DCWASA Standard Specifications Section 02730, SEWER PIPE.

PART 2: PRODUCTS

2.01 MATERIALS

A. Sanitary Sewer Piping and Fittings (PVC)

1. Sanitary sewer piping and fittings (PVC) shall be PVC pipes meeting the requirements of ASTM D3034, wall thickness classification SDR-35 in accordance with DCWASA Standard Specifications Section 02730. Pipe shall be furnished in lengths of not less than 12 feet. Pipe with blisters, bubbles, cuts or shapes on inside or outside surfaces, or imperfections which will impair the performance or life of the pipe will be rejected. Joints for PVC pipe and fittings shall be the integral bell gasketed joint designed so when assembled the elastometric gasket inside the bell is compressed radially on the pipe spigot and provides a watertight joint. Joints for PVC pipe shall meet the requirements of ASTM D3212 and the gasket shall meet requirements of ASTM F477.

2. PVC pipe and fittings shall be legibly marked in accordance with ASTM D3034 and ASTM F679, and in addition marked with the date and location of manufacture. Pipe not marked as indicated herein will be rejected and pipe manufactured more than six months before the date of work site inspection will not be accepted.

3. Pipe Locator Wire: To facilitate future locating of HDPE water pipe and sanitary sewer force main, a 12 gauge copper wire shall be laid with pipe in contact with all fittings and valves.

B. Sanitary Sewer Piping and Fittings (HDPE)

1. Sanitary Sewer Piping and Fittings (HDPE) shall be high density polyethylene pipe which meets the applicable requirements of ANSI/AWWA C901/C906.
   a. All pipe and related fittings shall be made with prime virgin resins exhibiting a minimum cell classification as defined in ASTM D3350 and meeting the PE 3408 code designation.
   b. The pipe shall be homogenous throughout and shall be free of visible cracks, holes, foreign material, blisters, or other deleterious faults.
   c. Dimension Ratios: The maximum dimension ration (DR) shall be 11.
   d. For sewer installations pipe material color shall be white or black with interior of pipe having a light reflective color to enhance viewing for television inspection.
   e. Installation Method: HDPE pipe shall be continuously joined with a minimum length, which shall be that deemed necessary by the CONTRACTOR to effectively span the required distance, unless otherwise specified. CONTRACTOR shall verify the lengths in the field before manufacturing.
   f. Casing isolators/spaces system shall be Ranger 11® casing spacers as manufactured by Pipeline Seal and Insulator, Inc. or approved equal.
   g. End seals shall be 1/8″ thick synthetic rubber, PSI model “C” end seals as manufactured by Pipeline Seal and Insulator, Inc. or approved equal.

C. Cast-in-Place Concrete shall meet the requirements of Contract Specifications Section 03300, CAST-IN-PLACE CONCRETE, fc’=3500 psi.

D. Connection Appurtenances shall meet the requirements of the DCWASA Standard Specifications Section 02730, SEWER PIPE.

E. Granular bedding material for pipes and structures shall meet the requirements of Contract Specifications Section 02720, AGGREGRATE BASE COURSE.

F. Precast concrete manholes shall meet the requirements of the DC WASA Standard Specifications Section 02705, SEWER MANHOLES. All manholes shall be designed for AREMA E-60 load for live load. All reinforcement shall confirm to ASTM A-615, grade 60, and shall be epoxy coated.

G. Miscellaneous metal connectors and appurtenances shall meet the requirements of the DCWASA Standard Specifications Section 02730, SEWER PIPE, and the DCWASA Standard Details and Drawings.

H. Masonry work shall meet the requirements of DCWASA Standard Specifications Section 04210 BRICK AND BLOCK MASONRY, and 04220, BRICK MASONRY.

I. Mortar bonding admixture shall meet the requirements of the DCWASA Standard Specifications Section 04100, MORTAR.

J. Curing compound shall meet the requirements of ASTM C-309, Type 2, Class B white pigmented resin based for use with parging and precast grade rings.

K. Non-shrink grout shall meet the requirements of the DCWASA Standard Specifications Section 03600, NON-SHRINK GROUT.

L. Flexible gasket between manhole and manhole frame shall be extruded rope type B, in accordance with AASHTO M198 butyl based, ¾-inch diameter minimum and shall be Kent Seal II as manufactured by Hamilton Kent Manufacturing Co. Other substitutions for flexible gasket shall be Flex-Lok as manufactured by ADCO Products; E-Z Stik as manufactured by Concrete Products Supply Company, A Division of Press Seal Gasket Corporation; or CS-302 as manufactured by Concrete Sealants, Inc.

M. Grinder Pump

The CONTRACTOR shall furnish and install the grinder pump station, which include the concrete manhole structure, two (2) factory-built and tested grinder pump units, control panel (alarm panel), and all required accessories as shown on the contract plans and as described below. Each grinder pump unit shall consist of a grinder pump core suitably mounted on an integral stand of stainless steel, electrical quick disconnect (NEMA 6P), pump removal harness, discharge assembly/shut-off valve, anti-siphon valve/check valve assembly, electrical alarm assembly and all necessary internal wiring and controls.

The grinder pumps shall be 240 Volt W Series Grinder Pump as manufactured by Environment One Corporation or equal as specified herein. Each grinder pump shall be capable of delivering 15 GPM against a rated total dynamic head of 0 feet (0 PSIG), 11 GPM against a rated total dynamic head of 92 feet (40 PSIG), and 7.8 GPM against a rated total dynamic head of 185 feet (80 PSIG). The pump(s) must also be capable of operating at negative total dynamic head without overloading the motor(s). Under no conditions shall in-line piping or valving be allowed to create a false apparent head.

The control panel (alarm panel) shall be model T260 as manufactured by Environment One Corporation or equal as specified herein.

The manhole structure shall meet the requirements of the DC WASA Standard Specifications Section 02705, SEWER MANHOLES.

1. **PUMP:** The pump shall be a custom designed, integral, vertical rotor, motor driven, solids handling pump of the progressing cavity type with a single mechanical seal. Double radial O-ring seals are required at all casting joints to minimize corrosion and create a protective barrier. All pump castings shall be cast iron, fully epoxy coated to 8-10 mil Nominal dry thickness, wet applied. The rotor shall be through-hardened, highly polished, precipitation hardened stainless steel. The stator shall be of a specifically compounded ethylene propylene synthetic elastomer. This material shall be suitable for domestic wastewater service. Its physical properties shall include high tear and abrasion resistance, grease resistance, water and detergent resistance, temperature stability, excellent aging properties, and outstanding wear resistance. Buna-N is not acceptable as a stator material because it does not exhibit the properties as outlined above and required for wastewater service.

2. **GRINDER:** The grinder shall be placed immediately below the pumping elements and shall be direct-driven by a single, one-piece motor shaft. The grinder impeller (cutter wheel) assembly shall be securely fastened to the pump motor shaft by means of a threaded connection attaching the grinder impeller to the motor shaft. Attachment by means of pins or keys will not be acceptable. The grinder impeller shall be a one-piece, 4140 cutter wheel of the rotating type with inductively hardened cutter teeth. The cutter teeth shall be inductively hardened to Rockwell 50 – 60c for abrasion resistance. The shredder ring shall be of the stationary type and the material shall be white cast iron. The teeth shall be ground into the material to achieve effective grinding. The shredder ring shall have a staggered tooth pattern with only one edge engaged at a time, maximizing the cutting torque. These materials have been chosen for their capacity to perform in the intended environment as they are materials with wear and corrosive resistant properties.

   This assembly shall be dynamically balanced and operate without objectionable noise or vibration over the entire range of recommended operating pressures. The grinder shall be constructed so as to minimize clogging and jamming under all normal operating conditions including starting. Sufficient vortex action shall be created to scour the tank free of deposits or sludge banks which would impair the operation of the pump. These requirements shall be accomplished by the following, in conjunction with the pump:

   a. The grinder shall be positioned in such a way that solids are fed in an upward flow direction.
   b. The maximum flow rate through the cutting mechanism must not exceed 4 feet per second. This is a critical design element to minimize jamming and as such must be adhered to.
   c. The inlet shroud shall have a diameter of no less than 5 inches. Inlet shrouds that are less than 5 inches in diameter will not be accepted due to their inability to maintain the specified 4 feet per second maximum inlet

velocity which by design prevents unnecessary jamming of the cutter mechanism and minimizes blinding of the pump by large objects that block the inlet shroud.

d. The impeller mechanism must rotate at a nominal speed of no greater than 1800 rpm.

The grinder shall be capable of reducing all components in normal domestic sewage, including a reasonable amount of “foreign objects,” such as paper, wood, plastic, glass, wipes, rubber and the like, to finely-divided particles which will pass freely through the passages of the pump and the 1-1/4" diameter stainless steel discharge piping.

3. **ELECTRIC MOTOR:** As a maximum, the motor shall be a 1 HP, 1725 RPM, 240 Volt 60 Hertz, 1 Phase, capacitor start, ball bearing, air-cooled induction type with Class F installation, low starting current not to exceed 30 amperes and high starting torque of 8.4 foot pounds. The motor shall be press-fit into the casting for better heat transfer and longer winding life. Inherent protection against running overloads or locked rotor conditions for the pump motor shall be provided by the use of an automatic-reset, integral thermal overload protector incorporated into the motor. This motor protector combination shall have been specifically investigated and listed by Underwriters Laboratories, Inc., for the application. Non-capacitor start motors or permanent split capacitor motors will not be accepted because of their reduced starting torque and consequent diminished grinding capability. The wet portion of the motor armature must be 300 Series stainless. To reduce the potential of environmental concerns, the expense of handling and disposing of oil, and the associated maintenance costs, oil-filled motors will not be accepted.

4. **MECHANICAL SEAL:** The pump/core shall be provided with a mechanical shaft seal to prevent leakage between the motor and pump. The seal shall have a stationary ceramic seat and carbon rotating surface with faces precision lapped and held in position by a stainless steel spring.

5. **DISCHARGE HOSE AND DISCONNECT/VALVE:** All discharge fittings and piping shall be constructed of polypropylene, EPDM or PVC. The discharge hose assembly shall include a shut-off valve rated for 200 psi WOG and a quick disconnect feature to simplify installation and pump removal. The bulkhead penetration shall be factory installed and warranted by the manufacturer to be watertight.

6. **ELECTRICAL QUICK DISCONNECT:** The grinder pump core shall include a factory-installed NEMA 6P electrical quick disconnect (EQD) for all power and control functions. The EQD will be supplied with appropriate length of useable, electrical supply cable (ESC) as required by the plans to connect to the control panel (alarm panel). The EQD shall require no tools for

assembly, seal against water before the electrical connection is made, and include radial seals to assure a watertight seal regardless of tightening torque. Plug-type connections of the power cable onto the pump housing will not be acceptable due to the potential for leaks and electrical shorts. Junction boxes are not acceptable due to the large number of potential leak points. The EQD shall be so designed to be conducive to field wiring as required.

7. **CHECK VALVE:** The pump discharge shall be equipped with a factory installed, gravity operated, flapper-type integral check valve built into the discharge piping. The check valve will provide a full-ported passageway when open, and shall introduce a friction loss of less than 6 inches of water at maximum rated flow. Moving parts will be made of a 300 Series stainless steel and fabric reinforced synthetic elastomer to ensure corrosion resistance, dimensional stability, and fatigue strength. A nonmetallic hinge shall be an integral part of the flapper assembly providing a maximum degree of freedom to assure seating even at a very low back-pressure. The valve body shall be an injection molded part made of an engineered thermoplastic resin. The valve shall be rated for continuous operating pressure of 235 psi. Ball-type check valves are unacceptable due to their limited sealing capacity in slurry applications.

8. **ANTI-SIPHON VALVE:** The pump discharge shall be equipped with a factory-installed, gravity-operated, flapper-type integral anti-siphon valve built into the discharge piping. Moving parts will be made of 300 Series stainless steel and fabric-reinforced synthetic elastomer to ensure corrosion resistance, dimensional stability, and fatigue strength. A nonmetallic hinge shall be an integral part of the flapper assembly, providing a maximum degree of freedom to ensure proper operation even at a very low pressure. The valve body shall be injection-molded from an engineered thermoplastic resin. Holes or ports in the discharge piping are not acceptable anti-siphon devices due to their tendency to clog from the solids in the slurry being pumped. The anti-siphon port diameter shall be no less than 60% of the inside diameter of the pump discharge piping.

9. **CORE UNIT:** The grinder pump station shall have an easily removable core assembly containing pump, motor, grinder, all motor controls, check valve, anti-siphon valve, electrical quick disconnect and wiring. The watertight integrity of the core unit shall be established by a 100% factory test at a minimum of 5 PSIG.

10. **CONTROLS:** All necessary motor starting controls shall be located in the cast iron enclosure of the core unit secured by stainless steel fasteners. Locating motor starting controls in a plastic enclosure is not acceptable. Wastewater level sensing controls shall be housed in a separate enclosure from motor starting controls. Level sensor housing must be sealed via a radial type seal; solvents or glues are not acceptable. Level sensing control housing

must be integrally attached to pump assembly so that it may be removed from the station with the pump and in such a way as to minimize the potential for the accumulation of grease and debris accumulation, etc. Level sensing housing must be a high-impact thermoplastic copolymer over-molded with a thermo plastic elastomer. The use of PVC for the level sensing housing is not acceptable.

Non-fouling wastewater level controls for controlling pump operation shall be accomplished by monitoring the pressure changes in an integral air column connected to a pressure switch. The air column shall be integrally molded from a thermoplastic elastomer suitable for use in wastewater and with excellent impact resistance. The air column shall have only a single connection between the water level being monitored and the pressure switch. Any connections are to be radial sealed with redundant O-rings. The level detection device shall have no moving parts in direct contact with the wastewater and shall be integral to the pump core assembly in a single, readily-exchanged unit. Depressing the push to run button must operate the pump even with the level sensor housing removed from the pump.

All fasteners throughout the assembly shall be 300 Series stainless steel. High-level sensing will be accomplished in the manner detailed above by a separate air column sensor and pressure switch of the same type. Closure of the high-level sensing device will energize an alarm circuit as well as a redundant pump-on circuit. For increased reliability, pump ON/OFF and high-level alarm functions shall not be controlled by the same switch. Float switches of any kind, including float trees, will not be accepted due to the periodic need to maintain (rinsing, cleaning) such devices and their tendency to malfunction because of incorrect wiring, tangling, grease buildup, and mechanical cord fatigue. To assure reliable operation of the pressure switches, each core shall be equipped with a factory installed equalizer diaphragm that compensates for any atmospheric pressure or temperature changes. Tube or piping runs outside of the station tank or into tank-mounted junction boxes providing pressure switch equalization will not be permitted due to their susceptibility to condensation, kinking, pinching, and insect infestation. The grinder pump will be furnished with a 6 conductor 14 gauge, type SJOW cable, pre-wired and watertight to meet UL requirements with a FACTORY INSTALLED NEMA 6P EQD half attached to it.

11. **CONTROL PANEL (ALARM PANEL):** Each grinder pump station shall include a NEMA 4X, UL-listed control panel (alarm panel) suitable for wall or pole mounting. The NEMA 4X enclosure shall be manufactured of thermoplastic polyester to ensure corrosion resistance. The enclosure shall include a hinged, lockable cover with padlock, preventing access to electrical components, and creating a secured safety front to allow access only to authorized personnel. The enclosure shall not exceed 10.5" W x 14" H x 7" D, or 12.5" W x 16" H x 7.5" D if certain options are included.

The control panel (alarm panel) shall contain one 15-amp, double-pole circuit breaker for the pump core's power circuit and one 15-amp single-pole circuit breaker for the alarm circuit. The panel shall contain a push-to-run feature, an internal run indicator, and a complete alarm circuit. All circuit boards in the control panel (alarm panel) are to be protected with a conformal coating on both sides and the AC power circuit shall include an auto resetting fuse.

The control panel (alarm panel) shall include the following features: external audible and visual alarm; push-to-run switch; push-to-silence switch; redundant pump start; and high level alarm capability. The alarm sequence is to be as follows when the pump and alarm breakers are on:

a. When liquid level in the sewage wet-well rises above the alarm level, audible and visual alarms are activated, the contacts on the alarm pressure switch activate, and the redundant pump starting system is energized.
b. The audible alarm may be silenced by means of the externally mounted, push-to-silence button.
c. Visual alarm remains illuminated until the sewage level in the wet-well drops below the "off" setting of the alarm pressure switch.

The visual alarm lamp shall be inside a red, oblong lens at least 3.75" L x 2.38" W x 1.5" H. Visual alarm shall be mounted to the top of the enclosure in such a manner as to maintain the NEMA 4X rating. The audible alarm shall be externally mounted on the bottom of the enclosure, capable of 93 dB @ 2 feet. The audible alarm shall be capable of being deactivated by depressing a push-type switch that is encapsulated in a weatherproof silicone boot and mounted on the bottom of the enclosure (push-to-silence button).

For duplex stations, in addition to the above, two high level indicator lights shall be mounted within the enclosure on the duplex panel's alarm circuit board. During high level alarm indication on duplex stations, the appropriate indicator light will illuminate to indicate which core requires service.

The entire control panel (alarm panel), as manufactured and including any of the following options, shall be listed by Underwriters Laboratories, Inc.

12. **SERVICEABILITY:** The grinder pump core, including level sensor assembly, shall have two lifting hooks complete with lift-out harness connected to its top housing to facilitate easy core removal when necessary. The level sensor assembly must be easily removed from the pump assembly for service or replacement. All mechanical and electrical connections must provide easy disconnect capability for core unit removal and installation. Each EQD half must include a water-tight cover to protect the internal electrical pins while the EQD is unplugged. A pump push-to-run feature will be provided for field trouble shooting. The push-to-run feature must operate the pump even if the level sensor assembly has been removed from the pump

assembly. All motor control components shall be mounted on a readily replaceable bracket for ease of field service.

13. **SAFETY:** The grinder pump shall be free from electrical and fire hazards as required in a residential environment. As evidence of compliance with this requirement, the completely assembled and wired grinder pump station shall be listed by Underwriters Laboratories, Inc., to be safe and appropriate for the intended use. UL listing of components of the station, or third-party testing to UL standard are not acceptable.

    The grinder pump shall meet accepted standards for plumbing equipment for use in or near residences, shall be free from noise, odor, or health hazards, and shall have been tested by an independent laboratory to certify its capability to perform as specified in either individual or low pressure sewer system applications. As evidence of compliance with this requirement, the grinder pump shall bear the seal of NSF International. Third-party testing to NSF standard is not acceptable.

N. Sanitary Dump Pans shall be manufactured in accordance to the details shown on Contract Drawings.

O. Brass quick-acting couplings as manufactured by Kuriyama of America Inc., Brass Part A Male Adaptor with Female NPT (BR-A 400) and Dust Cap (DR-DC-400) or approved equal.

PART 3: EXECUTION

3.01 SANITARY SEWER COLLECTION SYSTEM

A. The Contractor shall obtain all necessary permits and approvals from DCWASA and pay all fees necessary for sanitary sewer collection system installation in accordance with applicable sections of DCWASA Standard Specifications. The Contractor shall install the new sewer line and fittings to service all sanitary dump facilities and the sanitary service connection for the new maintenance of equipment building. The Contractor shall adjust the exact location of the new sewer connection according to the exact location of the service fixture as approved by the Engineer. The Contractor shall provide sewer connection from the new maintenance of equipment building to the pipe stub including drop connection in accordance with the details shown on the drawing. Install connection pipe at a minimum of two percent grade.

B. The installation of the new sanitary sewer collection system shall be performed in accordance with the DCWASA Standard Specifications Section 02705, SEWER MANHOLES, and 02730, SEWER PIPE.

3.02 TRENCH EXCAVATION AND BACKFILL

A. Before excavating, dig test pits as directed by the Engineer in accordance with DCWASA Standard Specifications Section 02225, TEST PITS, to determine size and type of existing pipe to which the proposed pipe will connect and its exact location. Adjust pipeline alignment and profile as required to connect to existing mains, subject to the approval of the Engineer. Before pipe installation, excavate sufficient trench in advance and/or test pits so that reasonable changes in line and grade can be made where the location of existing structures vary from that shown and to assure that no unforeseeable obstructions exist. Work occasioned by failure to take such precautions shall be performed at no cost to the Owner.

B. Excavate trenches to 24-inch plus the outside diameter of pipe at locations shown on the Contract Drawings. Provide uniform, continuous support for pipe on required bedding as shown on the Contract Drawings. Provide bedding as specified in DCWASA Standard Specifications Section 02220, TRENCH EXCAVATION AND BACKFILL.

C. Trench excavation will be unclassified and shall consist of all material encountered to the lines, grades, and sections shown on the plans and as directed by the Engineer.

D. The Contractor shall support the sides and ends of all excavation where necessary, with braces, sheeting, shoring or stringers, trench boxes or other acceptable excavation support systems. All work shall be performed in strict accordance with OSHA requirements. The support of the trench shall be the sole responsibility of the Contractor.

E. The Contractor shall grade the site as necessary to prevent surface water from flowing into the trench or other utility excavations and shall provide all necessary temporary surface drainage and keep the same operating to the satisfaction of the Engineer until permanent drainage or finished grading and permanent surface stabilization has been completed. Damming or ponding of water in gutters or storm drains will not be permitted. It shall be the Contractor's responsibility to adequately control water that may be present in the excavation. He shall provide for the disposal of water removed from excavation in such a manner not to cause damage to public or private property or to any portion of the work completed or in progress or cause any impediment to the use of any area by the public; nor shall the Contractor discharge any flushing or ground water or any material of any nature into existing sanitary sewer system during the construction of the facilities. All water shall be discharged through an approved sediment control device. The costs of dewatering trench excavations will not be paid for directly, but will be included in prices bid for other related items.

F. Trench bedding, backfill, and restoration shall be as specified in DCWASA Standard Specifications Section 02220, TRENCH EXCAVATION AND BACKFILL.

3.03 PIPE INSTALLATION

A. Pipe installation shall be in accordance with DCWASA Standard Specifications Section 02730, SEWER PIPE. Foreign matter shall be cleaned and removed from each pipe, fitting and valve before placing in the trench. The interior of the pipe shall be kept clean during installation and thereafter. Remove pipe, fittings and valves when the interior has been contaminated with oil, gasoline, kerosene or other material which damages the cement of bituminous lining and replace at no cost to the Owner. Should foreign material or contaminates be observed in previously installed pipe, fittings, and valves cease work until foreign material is removed or contaminated pipe fittings, and valves are decontaminated or replaced. Open ends of pipes and fittings shall be closed with a watertight seal during periods when work is not proceeding.

B. No pipe shall be laid upon a foundation neither into which frost has penetrated, nor at any time when there is danger of ice formation or frost penetration at the bottom of the excavation. In freezing weather, open trench length shall be kept to a minimum and the excavation promptly backfilled after the pipe has been installed.

C. Each pipe shall be bedded on a solid foundation acceptable to the Engineer. Bell holes shall be dug sufficiently large to insure that joints are properly made and the pipe is firmly bedded for the full length of the barrel.

D. All pipes shall be installed in accordance with the recommendations of the pipe manufacturer and as specified herein. These recommendations shall include maximum trench width, if more restrictive than that shown on the Contract Drawings included herein; bedding requirements; backfill material and compaction, where applicable. In addition, the following shall apply unless otherwise noted.

E. Proper and suitable tools and appliances for safe and convenient handling and joining of pipes and fittings shall be used. Slings shall not damage the exteriors and/or coating of the pipe, and shall be wide canvas or rubber-coated belts.

F. Pipe and fittings shall be carefully handled and lowered into the trench. Pipe shall be installed with special care to insure that each length abuts against the next to produce no shoulder or unevenness of any kind along the inside bottom half of the pipeline. No wedging or blocking will be permitted in installing any pipe unless directed by written order or permission in writing is obtained from the Engineer.

G. No pipe shall be brought into position until the preceding length has been thoroughly bedded and secured in place. Care shall be used to secure water

tightness and prevent damage, to, or disturbing of, the joints during the refilling process. After pipes have been installed and joints have been made, there shall be no walking on or working over the pipe, except as may be necessary in tamping the backfill material, until the backfill is at least 2 feet over the top of the pipe.

H. The pipes shall be thoroughly cleaned before being installed and shall be kept clean until acceptance of the completed work. Open ends of all pipelines shall be provided with a stopper carefully fitted to keep dirt and other substances from entering. This stopper shall be kept in the end of the pipeline at all times when installation is not in progress.

I. Whenever a pipe requires cutting, to fit into the line or bring it to the required location, the work shall be done in a manner that leaves a smooth, square end. Any lining damage due to field cutting shall be repaired by the Contractor as specified herein.

J. Align pipe so that no shoulder or unevenness results on the inside of the main. Cutting, where required, shall be smooth and at right angles to the pipe axis. Cutting shall be performed at no cost to the Commission. Secure pipes and fittings in place in the manner indicated on the Contract Drawings. Where indicated, provide erosion checks and concrete anchors in accordance with the DCWASA Standard Details. If no method for securing pipe is indicated, secure with wooden wedges or braces and concrete to the satisfaction of the Engineer.

K. Sanitary sewer pipes (HDPE) shall be installed by directional boring as specified in Contract Specifications Section 02535, HORIZONTAL DIRECTION BORING.

L. Positive grade shall be maintained in 8” Sanitary gravity pipe (HDPE) installed by direction boring.

M. Sanitary sewer pipes installed beneath the railroad tracks shall be encased in concrete in accordance with details as shown on contract plans. Concrete encasement shall extend a minimum of 12 feet on each side from centerline of railroad tracks.

3.04 JOINTS

A. Joints shall be installed in accordance with DCWASA Standard Specifications Section 02730, SEWER PIPE and DCWASA Standard Specifications Section 02705, SEWER MANHOLES.

3.05 MANHOLES

A. Manholes shall be installed in accordance with DCWASA Standard Specifications Section 02705, SEWER MANHOLES.

3.06 CONNECTIONS TO EXISTING SEWERS AND MANHOLES

A. Connections to existing sanitary sewers and manholes shall be made in accordance with DCWASA Standard Specifications Section 02730, SEWER PIPE and DCWASA Standard Specifications Section 02705, SEWER MANHOLES.

3.07 FIELD TESTING OF SANITARY SEWERS AND MANHOLES

A. Field testing of sanitary sewers and manholes shall be made in accordance with the applicable portion of the DCWASA Standard Specifications Section 02730, SEWER PIPE and DCWASA Standard Specifications Section 02705, SEWER MANHOLES.

3.08 GRINDER PUMP

A. The Grinder Pumps and control panel (alarm panel) shall be installed in accordance with manufacturer's recommendations.

B. Utilize manufacturer's approved installation device to assure proper installation.

C. The MANUFACTURER shall provide the services of qualified factory trained technician(s) who shall inspect the placement and wiring of each station, perform field tests as specified herein, and instruct the OWNER'S personnel in the operation and maintenance of the equipment before the stations are accepted by the OWNER.

All equipment and materials necessary to perform testing shall be the responsibility of the INSTALLING CONTRACTOR. This includes, as a minimum, a portable generator and power cable (if temporary power is required), water in each basin (filled to a depth sufficient to verify the high level alarm is operating), and opening of all valves in the system. These steps shall be completed prior to the qualified factory trained technician(s) arrival on site.

The services of a trained, factory-authorized technician shall be provided at a rate of 40 hours for every 100 grinder pump stations supplied.

Upon completion of the installation, the authorized factory technician(s) will perform the following test on each station:

1. Make certain the discharge shut-off valve in the station is fully open.
2. Turn ON the alarm power circuit and verify the alarm is functioning properly.
3. Turn ON the pump power circuit. Initiate the pump operation to verify automatic "on/off" controls are operative. The pump should immediately turn ON.
4. Consult the Manufacturer's Service Manual for detailed start-up procedures.

Upon completion of the start-up and testing, the MANUFACTURER shall submit to the ENGINEER the start-up authorization form describing the results of the tests performed for each grinder pump station. Final acceptance of the system will not occur until authorization forms have been received for each pump station installed and any installation deficiencies corrected.

3.09 OPERATION AND MAINTENANCE DATA FOR GRINDER PUMP:

A. In addition to the copies required in Section 01300, SUBMITTALS, the Contractor shall submit a total of ten (10) hard copies and two (2) electronic, self-extracting copies on CD to the Engineer of a manual containing all information pertaining to the operation and maintenance of the Grinder Pump. One CD copy shall be designated for use by the Systems Maintenance Training Dept.

B. Contractor shall submit the text portions of the CD in Word 2000 format or Adobe pdf file format. All drawings shall be submitted in AutoCAD format with a .dwg or .dxf file extension.

3.10 TRAINING COURSES AND MATERIALS FOR OPERATION AND MAINTENANCE OF GRINDER PUMP:

A. Training Courses: Manufacturer shall provide two (2) training sessions of a minimum 2 hours each for operations and maintenance personnel. Training shall be provided for two (2) different shifts. The MTA reserves the right to videotape training sessions for in-house use only. Copies of all instructor materials (documents, overhead transparencies, video tapes, multimedia software, etc) shall be turned over to the Systems Maintenance Instructor at the conclusion of all training sessions. Provide an agenda and coordinate training session at least six (6) weeks in advance of the targeted training delivery date. Student manuals shall be submitted ten (10) weeks in advance of the targeted training date.

B. Training Course Materials: Each student shall be provided with a student manual. The student manual shall contain all the information that will be covered in the training session. Topics shall include System Theory of Operation, Personnel Safety, Drawings, Schematics and a Troubleshooting Guide as a minimum. Number of students per course is limited to ten (10).

PART 4: MEASUREMENT AND PAYMENT

4.01 COORDINATION WITH DCWASA AND OBTAINING ALL NECESSARY PERMITS

A. Coordination with DCWASA and Obtaining All Necessary Permits will not be measured for payment.

B. Coordination with DCWASA and Obtaining All Necessary Permits will not be paid for directly, but the cost will be incidental to the Sanitary Sewer System items specified in the Contract Documents.

4.02 PIPE CONNECTION TO EXISTING SANITARY MANHOLE:

A. Pipe Connection to Existing Sanitary Sewer Manhole will not be measured for payment.

B. Pipe Connection to Existing Sanitary Sewer Manhole will not be paid for directly, but the cost will be incidental to the price of pertinent pipe items specified in the Contract Documents.

4.03 EXCAVATION AND INCIDENTALS

A. Excavation, sheeting, shoring, dewatering, hauling, invert paving, storing, rehandling of material, removal and disposal of excess and unsuitable material, tamped fill, forming bed or foundation, bedding, backfill, compaction, inspection, joints, castings, and pipe connections to sanitary manholes will not be measured for payment.

B. Excavation, sheeting, shoring, dewatering, hauling, invert paving, storing, rehandling of material, removal and disposal of excess and unsuitable material, tamped fill, forming bed or foundation, bedding, backfill, compaction, inspection, joints, castings, and pipe connections to sanitary manholes will not be paid for directly, but will be considered incidentals necessary for the work items specified in the Contract Documents .

4.04 GRINDER PUMP:

A. Grinder Pump will be measured per each.

B. Grinder Pump will be paid for at the Contract unit price bid per each, regardless of invert depth, completed in place, accepted, which payment will be full compensation for furnishing and installation of concrete manhole, two (2) grinder pump units, control panel (alarm panel), wiring and accessories, excavation, shoring, dewatering, backfill, compaction, aggregate, manhole frame and cover, vent and vent pipe, grade and slope adjustments, specials of every kind, conducting all tests and making all necessary repairs as specified, manuals, training, and all materials, labor, equipment, tools, and incidentals necessary to complete the item as specified.

4.05 48-INCH PRECAST SANITARY MANHOLE:

A. 48-Inch Precast Sanitary Manholes will be measured per each.

B. 48-Inch Precast Sanitary Manhole will be paid for at the Contract unit price bid per each, regardless of vertical depth, completed in place, accepted, which payment will be full compensation for all excavation, sheeting, shoring, dewatering, concrete,

masonry, special or precast units, reinforcement, ladder rungs, drip stones, frames, grates and covers, grade and slope adjustments, backfill, compaction, aggregate, castings, and for all materials, labor, equipment, tools, and incidentals necessary to complete the item as specified.

4.06 SANITARY DUMP PAN:

A. Sanitary Dump Pan will be measured per each.

B. Sanitary Dump Pan will be paid for at the Contract unit price bid per each, completed in place, accepted, which payment will be full compensation for furnishing and installation of sanitary dump pan and all accessories, and for all materials, labor, equipment, tools, and incidentals necessary to complete the item

4.07 4” SANITARY SEWER PIPE (PVC):

A. 4” Sanitary Sewer Pipe (PVC) will be measured per linear foot.

B. 4” Sanitary Sewer Pipe (PVC) will be paid for at the contract unit price bid per linear foot, regardless of class, complete in place, accepted, which price will be full compensation for all material, excavation, sheeting, shoring, dewatering, aggregate, pipe fittings, backfill, compaction, and for all materials, labor, equipment, tools, and incidentals necessary to complete the item as specified.

4.08 6” SANITARY SEWER PIPE (PVC):

A. 6” Sanitary Sewer Pipe (PVC) will be measured per linear foot.

B. 6” Sanitary Sewer Pipe (PVC) will be paid for at the contract unit price bid per linear foot, regardless of class, complete in place, accepted, which price will be full compensation for all material, excavation, dewatering, sheeting, shoring, aggregate, pipe fittings, backfill, compaction, and for all materials, labor, equipment, tools, and incidentals necessary to complete the item as specified.

4.09 8” SANITARY SEWER PIPE (PVC):

A. 8” Sanitary Sewer Pipe (PVC) will be measured per linear foot.

B. 8” Sanitary Sewer Pipe (PVC) will be paid for at the contract unit price bid per linear foot, regardless of class, complete in place, accepted, which price will be full compensation for all material, excavation, dewatering, sheeting, shoring, aggregate, pipe fittings, backfill, compaction, and for all materials, labor, equipment, tools, and incidentals necessary to complete the item as specified.

4.10 4” VERTICAL SANITARY SEWER CONNECTION PIPE (PVC):

A. 4” vertical Sanitary Sewer Connection Pipe (PVC) will be measured per linear foot.

B. 4” vertical Sanitary Sewer Connection Pipe (PVC) will be paid for at the contract unit price bid per linear foot, regardless of class, complete in place, accepted, which price will be full compensation for all material, excavation, dewatering, sheeting, shoring, aggregate, pipe fittings, backfill, compaction, and for all materials, labor, equipment, tools, and incidentals necessary to complete the item as specified.

4.11 1- ¼” SANITARY FORCEMAIN AND 4” CASING PIPE -DIRECTIONAL BORING (HDPE):

A. 1-¼” Sanitary Forcemain and 4” casing pipe will be measured per linear foot.

B. 1-¼” Sanitary Forcemain and 4” casing pipe will be paid for at the contract unit price bid per linear foot, complete in place, accepted, which price will be full compensation for all material, excavation, sheeting, shoring, dewatering, directional boring, sanitary manhole, plastic casing spacers, rubber end seals, manhole, manhole frame and cover, aggregate, pipe fittings, backfill, compaction, and for all materials, labor, equipment, tools, and incidentals necessary to complete the item as specified.

4.12 SQUARE SANITARY MANHOLE SM-11

A. Square Sanitary Manhole SM-11 will not be measured for payment.

B. Square Sanitary Manhole SM-11 will not be paid for directly, but will be considered incidental to the payment for 1-¼” Sanitary Forcemain and 4” casing pipe – Directional Boring (HDPE).

4.13 8” SANITARY SEWER PIPE – DIRECTION BORING (HDPE):

A. 8” Sanitary Sewer Pipe – Direction Boring (HDPE) will be measured per linear foot.

B. 8” Sanitary Sewer Pipe – Direction Boring (HDPE) will be paid for at the contract unit price bid per linear foot, complete in place, accepted, which price will be full compensation for all material, excavation, sheeting, shoring, dewatering, directional boring, aggregate, pipe fittings, backfill, compaction, and for all materials, labor, equipment, tools, and incidentals necessary to complete the item as specified.

4.14 CONCRETE ENCASEMENT:

A. Concrete encasement for sanitary sewer pipes will be measured per cubic yard.

B. Concrete encasement for oily sanitary sewer pipes will be paid for at contract unit price bid per cubic yard, completed in place, accepted, which payment will be full compensation for all concrete, excavation, forms, backfill, compaction, curing, disposal of excess or unsuitable material, and for all material, labor, equipment, tools, and incidentals necessary to complete the work.

END OF SECTION

SECTION 02630

STORM DRAINAGE

PART 1: GENERAL

1.01 DESCRIPTION:

A. This Section specifies the construction of storm drain systems for surface runoff consisting of inlets, manholes, trench drains, slot drains, ballast drains, SWM storage structures, pipe, and modifications to existing storm drainage structures.

B. Related Work Specified Elsewhere:

1. Section 02315 - Excavation and Backfill.
2. Section 02530 - Sanitary Sewer Collection System
3. Section 03300 - Cast-in-Place Concrete.
4. Section 03400 – Precast Concrete
5. Section 03210 - Concrete Reinforcement
6. Section 02636 – The Stormwater Management Stormfilter

1.02 DEFINITIONS:

A. Drainage Structures include inlets, manholes, cleanouts, trench drains, slot drains, ballast drains, and SWM storage structures

1.03 SUBMITTALS:

A. Shop Drawings

1. Shop drawings shall be submitted as specified in Contract Specifications Section 01300, SUBMITTALS, for the various types of pipe, fittings, castings and frames, pre-cast or cast-in-place concrete structures, vaults, and manholes, and other materials or products intended to be supplied. The shop drawings shall include the following information: design computations for all structures, product information, material strength, “type” or “class”, joint type, and storage, handling and installation recommendations.

B. Certificates of Compliance

1. Certificates of compliance shall be submitted in accordance with Contract Specifications Section 01450, QUALITY ASSURANCE AND QUALITY CONTROL, for the various items intended to be supplied. The certificates shall state that the materials or products have been manufactured in accordance with the standard referenced.

PART 2: PRODUCTS

2.01 MATERIALS:

A. Cast-in-place concrete shall meet the requirements of Contract Specifications Section 03300. Precast concrete shall meet the requirement of Contract Specifications Section 03400. Strength of concrete shall be as specified on plans or directed by the Engineer.

B. Nonshrink Grout shall meet the requirements of the DCWASA Standard Specifications Section 03600, NON-SHRINK GROUT.

C. Mortar bonding admixture shall meet the requirements of the DCWASA Standard Specifications Section 04100, MORTAR.

D. Joint Mortar for sewer pipe shall meet the requirements of the DCWASA Standard Specifications Section 02720, CATCH BASINS AND CONNECTING PIPE.

E. Castings for Frames, Covers, Gratings and Steps shall be iron castings meeting the requirements of ASTM A 48, Class 30B.

F. Frame and grate for trench drain shall be as specified on Contract plans and shall be manufactured by Neenah Foundry Company or approved equals.

G. Precast inlets and manholes shall meet the requirements of AASHTO M 199. All D.C. DOT standard pre-cast concrete manholes, single grate catch basins, and double grate catch basins shall be designed for AREAM E-60 load for live load. All reinforcement shall confirm to ASTM A-615, grade 60, and shall be epoxy coated.

H. Reinforced Concrete Pipe shall meet the requirements of AASHTO M 170, ASTM C 361, and AASHTO M 207, Class 3, 4, or 5 as indicated on the Contract Drawings. All reinforcement shall confirm to ASTM A-615, grade 60, and shall be epoxy coated.

I. Roofing Paper for Protecting Mortar Joints shall be composed of roofing felt saturated and coated on both sides with an asphaltic material. It shall not weigh less than 39.8 lb/100 sq. ft. and shall not crack when bent 90 degrees over 0.5 in. radius at room temperature.

J. Asphalt Sealer for Concrete Pipe shall be a mixture of asphalt, mineral filler, and petroleum solvents, and shall have adhesive and cohesive properties.

K. Ballast inlet screens shall be as specified on Contract plans and shall be manufactured by Neenah Foundry Company or approved equal.

L. Bricks for storm drain structures shall meet the requirements of AASHTO M91, Grade MS.

M. High Density Corrugated Polyethylene (HDPE) Smooth Lined Pipe:

1. All HDPE pipes and all related connections and fittings shall conform to the following:

a. High Density Polyethylene (HDPE) Corrugated and Smooth Lined Pipe & Fittings shall be manufactured in accordance with requirements of AASHTO M294 Corrugated Polyethylene Pipe 300 to 1500 mm Diameter or AASHTO M252 Corrugated Polyethylene Drainage Pipe (75 to 250mm), latest editions.

b. High Density Polyethylene (HDPE) Corrugated and Smooth Lined Pipe shall be manufactured from virgin PE compounds which conform to the requirements of cell class 335400C as defined and described in ASTM D 3350.

N. Slotted drains:

1. Slotted drain pipe shall be as manufactured by Duraslot® or approved equal and shall meet AASHTO M252, Type S for 10” and smaller and AASHTO M294, Type S or ASTM F2306 for pipes 12” to 36” diameter.

2. Slotted drain pipe fittings shall conform to AASHTO M252, AASHTO M294, or ASTM F2306.

3. Aluminum grate frame of slotted drain shall have a minimum thickness of 0.063 inches and shall be tempered commercial aluminum. The grating shall be ½ - #13 galvanized steel and the flange at the bottom of the aluminum grate shall be riveted to the pipe with a minimum of two rivets per linear foot.

O. Concrete Ditches shall meet the requirements of DC Std. Spec Section 817, Class F.

PART 3: EXECUTION

3.01 CONSTRUCTION SEQUENCE:

A. Pipe lengths and gradients shall be verified by the Contractor and shall be acceptable to the Engineer prior to installation.

B. Underground drainage structures shall be completed before paving surface is placed. Manholes and inlets shall not be completed to final grade unit the grading has been finished and all necessary arrangements have been made to insure suitable connections and tie-ins at proper grade and alignment with pavements, curbs, and gutters.

3.02 CONCRETE PIPE:

A. Excavation: When a pipe is to be laid on existing ground, on or under fill, embankment shall be constructed to a height of at least 9 in., but not more than 3 ft. above the proposed top of the pipe. The trench shall then be excavated to receive the pipe. The width of trench shall be sufficient to permit thorough tamping of the backfill under the haunches and around the pipe. This width shall be twice the outside diameter of the pipe or the outside diameter plus 18 in. on each side, whichever is less.

B. Bedding: When rock is encountered, it shall be removed and replaced with a minimum 8 in. of selected backfill as directed by the Engineer. When unsuitable foundation material is encountered, it shall be removed and replaced with selected backfill for the full width of the trench as directed by the Engineer.

C. Template: Culverts 48 in. or more in nominal horizontal diameter shall be bedded in an approved foundation shaped by means of a template which will support the pipe for at least 10 percent of its overall height.

D. Installation: Pipes shall be laid with hubs upgrade. A single hole through the shell of the pipe will be permitted with an approved lifting device. The lay hole shall be cast in the pipe during fabrication or cored without damaging any reinforcement. After installation, the lay hole shall be permanently sealed by filling with mortar, rubber plug, or other means approved by the Engineer. Wood plugs are prohibited.

E. Joints: Pipe joints shall be sealed in a manner appropriate to the pipe material.

1. Reinforced Concrete Pipe. Joints shall be sealed with rubber type gaskets (circular pipe) or resilient type material (elliptical pipe) conforming to AASHTO M 198. Mortar joints are prohibited.

2. Metal Pipe. Joints shall be sealed with rubber gaskets and coupling bands conforming to AASHTO M 36.

3. Plastic Pipe. Joints shall be integral bell and spigot with rubber or neoprene gaskets conforming to F 477.

F. Pipe Connections: Pipe connections may be either prefabricated or constructed in the field. Corrugated pipe sections shall be butted together and the sections joined with an approved band. A field pipe connection shall include cutting a hole in one pipe, inserting and trimming the connecting pipe and placing a concrete collar using Case-In-Place Concrete, fc'=3500 psi, at the connection. In the case of corrugated pipes, a welded connection may be substituted for the concrete collar.

G. Pipe Encasement: When specified in the Contract Documents or when directed by the Engineer, pipes shall be encased using Case-In-Place Concrete, fc'=3500 psi.

H. Backfill: Earth for backfill shall be free from large lumps, clods, and rocks and shall be placed along the side of the pipe for the full width of the trench in layers not exceeding 6 in. uncompacted depth. Compaction shall conform to Contract Specifications Section 02315. Each layer shall be compacted simultaneously on both sides of the pipe by means of an approved mechanical tamper. Special care shall be taken to compact the backfill thoroughly under the haunches of the pipe. This method of filling and compaction shall continue until the backfill is completed to a minimum height of 9 in. above the top of pipe. The Contractor shall protect all pipe from damage due to construction equipment or other vehicular traffic passing over the pipe.

3.03 HDPE PIPE

Construction shall be in accordance with ASTM D 2321, "Standard Practice for Underground Installation of Thermoplastic Pipe for Sewers and Other Gravity Flow Applications".

A. General Installation Requirements: Thermoplastic pipe shall be unloaded and handled with reasonable care. Pipe shall be placed in the bed starting at the downstream end. Trenches must be excavated in such a manner as to insure that the sides will be stable under all working conditions. Trench walls shall be sloped or supported in conformance with all standards of safety. Only as much trench as can be safely maintained shall be opened. All trenches shall be backfilled as soon as practicable, but no later than the end of each working day.

B. Trench Widths: Trench width shall be sufficient to ensure working room to properly and safely place and compact haunching and other backfill materials. Minimum trench width shall not be less than 1.25 times the pipe outside diameter plus 12 inches. (1.25 x O.D. + 12") Note: On multiple pipe barrel runs the clear distance between pipes is as follows:

12"-24" Diameters: Clear span =12"

C. Foundation and Bedding: Foundation and bedding shall meet the

requirements of AASHTO M 145, A-1, A-2-4, A-2-5, or A-3. A stable and uniform bedding shall be provided for the pipe and any protruding features of its joint and / or fittings. The middle of the bedding equal to 1/3rd of the pipe O.D. may be loosely placed, while the remainder shall be compacted to a minimum 90% of maximum density per AASHTO T99. A minimum of 4" of bedding shall be provided prior to placement of the pipe, unless an unyielding material (rock cuts) is present in the trench bottom, then a 6" cushion of bedding is recommended. Bedding material size shall be 1.5" maximum granular material.

D. Structural Backfill: Structural backfill shall also meet the requirements of AASHTO M 145, A-1, A-2-4, A-2-5, or A-3. Structural backfill shall be placed and compacted in layers 8" loose lift thickness and brought up evenly and simultaneously on both sides of the pipe to an elevation not less than one (1') foot above the top of the pipe. Structural backfill must be worked into the haunch area and compacted by hand. Structural backfill shall be 1.5" maximum granular size and a minimum compaction level of 90% Standard Proctor Density per AASHTO T99 shall be achieved.

E. Minimum Cover: The minimum cover is one foot (1.0'). However, care should be taken when heavy construction equipment loads cross the pipe trench during construction. If the passage of construction equipment over an installed pipeline is necessary during project construction, compacted fill in the form of a ramp shall be constructed to a minimum elevation of three (3.0') feet over the top of the pipe. Any damaged pipe shall be replaced at the contractor's expense.

F. Joints: Joints shall be installed so that the connection of pipe sections will form a continuous line free from irregularities in the flow line. All joints installed in public space will be Watertight. Watertight joints must meet a 74kPa (10.8 psi) third party laboratory test per the latest edition of ASTM D3212 Standard Specification for Joints for Drain and Sewer Plastic Pipes Using Flexible Elastomeric Seals. Suitable watertight joints are the following:

1. Water Tight Integral Bell-N-Spigot:

   a. The bell shall overlap a minimum of two (2) corrugations of the spigot end when fully engaged. The spigot end shall have an "O"-Ring gasket that meets ASTM F 477, "Specification for Elastomeric Seals (Gaskets) for Joining Plastic Pipe".

2. Water Tight Exterior Bell-N-Spigot:

   a. The bell shall be fully welded to the exterior of the pipe and

overlap the spigot end so that flow lines and ends match when fully engaged. The spigot end shall have an "O"-Ring gasket that meets ASTM F 477, "Specification for Elastomeric Seals (Gaskets) for Joining Plastic Pipe".

G. Concrete Encasement:

1. HDPE pipes installed beneath the railroad tracks shall be encased in concrete in accordance with details as shown on contract plans. Concrete encasement shall extend a minimum of 12 feet on each side from centerline of railroad tracks.

3.04 DRAINAGE STRUCTURES:

A. Castings: Frames for grates and covers for inlets and manholes shall be set in full beds of mortar and rigidly secured in place to proper grade and alignment.

B. Pipe Connections: Inlet and outlet pipes at drainage structures shall be set or cut flush with the inside faces of the structures and shall extend a sufficient distance beyond the outside faces of these walls to provide ample room for making proper connections. The joint around the pipe in the structure wall shall be completely and neatly closed with mortar or other approved material.

C. Inverts: Drainage structures containing two or more pipes shall have channeled inverts conforming to the Contract Documents.

D. Precast Drainage Structures:

1. Working drawings for structures not detailed in the Contract Documents shall be submitted to the Engineer for approval prior to fabrication.

2. Certification:

a. Certification from the manufacturer for each shipment of precast units is required. A copy of the certification shall be delivered to the Engineer, the Laboratory, and the Contractor with each shipment. One copy shall remain at the plant. The certification shall contain the name and address of the manufacturer, the type of structure, the identification number, the date of manufacture, the date of shipment, a statement indicating conformance with the Specifications, and the signature of the quality control manager. Noted on the unit shall be the station number and designation, the identification number, the name or trademark of

the manufacturer, the date of manufactured, and a stamp indicating conformance with the Specifications.

b. No precast unit shall be shipped unless it has been tested and is shown to be in full compliance with the Contract Documents.

c. The placement and consolidation of the required bedding under the unit shall be a minimum 6 inches of AASHTO M 43 No. 57 aggregate unless otherwise directed by the Engineer.

E. Cast-in-Place Drainage Structures: Inlets and manholes shall contain two 8-inch minimum diameter blockouts for underdrains. The drainage structures shall be backfilled with AASHTO M 43 No. 57 aggregate for a width of 1.5 feet outside of the structure and extend from the bottom of the structure to the subgrade.

3.05 CONCRETE DITCHES:

A. Excavation and preparation of subgrade shall confirm to Section 02315.

B. Forms and Concrete Mixing shall conform to Section 03300.

C. Maximum joint spacing shall be 15’. The joints shall be either bulkhead or weakened plane construction joint. Weakened Plane Joints shall be either tooled or sawed to a minimum depth of ¾ inches. Expansion joints shall be spaced a maximum of 90 ft. and be sealed.

PART 4: MEASUREMENT AND PAYMENT

4.01 EXCAVATION AND INCIDENTALS

A. Excavation, sheeting, shoring, dewatering, hauling, invert paving, storing, rehandling of material, removal and disposal of excess and unsuitable material, tamped fill, forming bed or foundation, bedding, backfill, compaction, inspection, joints, castings, and pipe connections will not be measured for payment.

B. Excavation, sheeting, shoring, dewatering, hauling, invert paving, storing, rehandling of material, removal and disposal of excess and unsuitable material, tamped fill, forming bed or foundation, bedding, backfill, compaction, inspection, joints, castings, and pipe connections will not be paid for directly, but will be considered incidentals necessary for the work items specified in the Contract Documents .

4.02 8-INCH HDPE PIPE

A. 8-Inch HDPE Pipe will be measured per linear foot.

B. 8-Inch HDPE Pipe will be paid for at the contract unit price bid per linear foot, complete in place, accepted, which price will be full compensation for all material, excavation, dewatering, sheeting, shoring, gravel, elbows and other fittings, pipe connections, backfill, compaction, equipment, tools, labor, and all work incidentals necessary to complete the item as specified.

4.03 12-INCH HDPE PIPE:

A. 12-Inch HDPE Pipe will be measured per linear foot.

B. 12-Inch HDPE Pipe will be paid for at the contract unit price bid per linear foot, complete in place, accepted, which price will be full compensation for all material, excavation, dewatering, sheeting, shoring, gravel, elbows and other fittings, pipe connections, backfill, compaction, equipment, tools, labor, and all work incidentals necessary to complete the item as specified.

4.04 15-INCH HDPE PIPE:

A. 15-Inch HDPE Pipe will be measured per linear foot.

B. 15-Inch HDPE Pipe will be paid for at the contract unit price bid per linear foot, complete in place, accepted, which price will be full compensation for all material, excavation, dewatering, sheeting, shoring, gravel, elbows and other fittings, pipe connections, backfill, compaction, equipment, tools, labor, and all work incidentals necessary to complete the item as specified.

4.05 18-INCH HDPE PIPE:

A. 18-Inch HDPE Pipe will be measured per linear foot.

B. 18-Inch HDPE Pipe will be paid for at the contract unit price bid per linear foot, complete in place, accepted, which price will be full compensation for all material, excavation, dewatering, sheeting, shoring, gravel, elbows and other fittings, pipe connections, backfill, compaction, equipment, tools, labor, and all work incidentals necessary to complete the item as specified.

4.06 24-INCH HDPE PIPE:

A. 25-Inch HDPE Pipe will be measured per linear foot.

B. 24-Inch HDPE Pipe will be paid for at the contract unit price bid per linear foot, complete in place, accepted, which price will be full compensation for all material, excavation, dewatering, sheeting, shoring, gravel, elbows and other fittings, pipe connections, backfill, compaction, equipment, tools, labor, and all work incidentals necessary to complete the item as specified.

4.07 15-INCH RCP PIPE CLASS V:

A. 15-Inch RCP Pipe Class V will be measured per linear foot.

B. 15-Inch RCP Pipe Class V will be paid for at the contract unit price bid per linear foot, complete in place, accepted, which price will be full compensation for all material, excavation, dewatering, sheeting, shoring, gravel, elbows and other fittings, pipe connections, backfill, compaction, equipment, tools, labor, and all work incidentals necessary to complete the item as specified.

4.08 18-INCH RCP PIPE CLASS V:

A. 18-Inch RCP Pipe Class V will be measured per linear foot.

B. 18-Inch RCP Pipe Class V will be paid for at the contract unit price bid per linear foot, complete in place, accepted, which price will be full compensation for all material, excavation, dewatering, sheeting, shoring, gravel, elbows and other fittings, pipe connections, backfill, compaction, equipment, tools, labor, and all work incidentals necessary to complete the item as specified.

4.09 24-INCH RCP PIPE CLASS V:

A. 24-Inch RCP Pipe Class V will be measured per linear foot.

B. 24-Inch RCP Pipe Class V will be paid for at the contract unit price bid per linear foot, complete in place, accepted, which price will be full compensation for all material, excavation, dewatering, sheeting, shoring, gravel, elbows and other fittings, pipe connections, backfill, compaction, equipment, tools, labor, and all work incidentals necessary to complete the item as specified.

4.10 30-INCH RCP PIPE CLASS V:

A. 30-Inch RCP Pipe Class V will be measured per linear foot.

B. 30-Inch RCP Pipe Class V will be paid for at the contract unit price bid per linear foot, complete in place, accepted, which price will be full compensation for all material, excavation, dewatering, sheeting, shoring, gravel, elbows and other fittings, pipe connections, backfill, compaction, equipment, tools, labor, and all work incidentals necessary to complete the item as specified. Surveying, removal, resetting, and adjusting of existing 4” forcemain for installation of the 30-inch RCP pipe Class V shall be incidental to this item.

4.11 38-INCH BY 24-INCH HERCP PIPE CLASS V:

A. 38-Inch by 24-Inch HERCP Pipe Class V will be measured per linear foot.

B. 38-Inch by 24-Inch HERCP Pipe Class V will be paid for at the contract unit price bid per linear foot, complete in place, accepted, which price will be full compensation for all material, excavation, dewatering, sheeting, shoring,

gravel, elbows and other fittings, pipe connections, backfill, compaction, equipment, tools, labor, and all work incidentals necessary to complete the item as specified.

4.12 REMOVAL OF EXISTING PIPE:

A. Removal of Existing Pipe will be measured per linear foot.

B. Removal of Existing Pipe will be paid at for at the Contract unit price bid per linear foot of pipe removed, regardless of pipe size and invert, which payment will be full compensation for all excavation, sheeting, shoring, dewatering, hauling, removal and disposal of pipe culvert, backfill, compaction, and for all materials, labor, equipment, tools, and incidentals necessary to complete the item as specified.

4.13 SIGLE GRATE CATCH BASIN:

A. Single Grate Catch Basin will be measured per each.

B. Single Grate Catch Basin will be paid for at the Contract unit price bid per each, regardless of vertical depth, complete in place as detailed in the plans and specifications, accepted, which price will be full compensation for all excavation, concrete, masonry, special or precast units, reinforcement, ladder rungs, drip stones, frames, grates, grade and slope adjustments, backfill, compaction, aggregate, castings, and for all materials, labor, equipment, tools, and incidentals necessary to complete the item as specified.

4.14 DOUBLE GRATE CATCH BASIN:

A. Double Grate Catch Basin will be measured per each.

B. Double Grate Catch Basin will be paid for at the Contract unit price bid per each, regardless of vertical depth, complete in place as detailed in the plans and specifications, accepted, which price will be full compensation for all excavation, concrete, masonry, special or precast units, reinforcement, ladder rungs, drip stones, frames, grates, grade and slope adjustments, backfill, compaction, aggregate, castings, and for all materials, labor, equipment, tools, and incidentals necessary to complete the item as specified.

4.15 TYPE I BALLAST DRAIN

A. Type I Ballast Drain will be measured per each.

B. Type I Ballast Drain will be paid for at the Contract unit price bid per each, regardless of vertical depth, complete in place as detailed in the plans and specifications, accepted, which price will be full compensation for all excavation, concrete, masonry, special or precast units, reinforcement, ladder rungs, drip stones, frames, grates and covers, grade and slope adjustments,

backfill, compaction, aggregate, castings, and for all materials, labor, equipment, tools, and incidentals necessary to complete the item as specified.

4.16 TYPE II BALLAST DRAIN

A. Type II Ballast Drain will be measured per each.

B. Type II Ballast Drain will be paid for at the Contract unit price bid per each, regardless of vertical depth, complete in place as detailed in the plans and specifications, accepted, which price will be full compensation for all excavation, concrete, masonry, special or precast units, reinforcement, ladder rungs, drip stones, frames, grates and covers, grade and slope adjustments, backfill, compaction, aggregate, castings, and for all materials, labor, equipment, tools, and incidentals necessary to complete the item as specified.

4.17 SPECIAL CATCH BASIN

A. Special catch basin will be measured per each.

B. Special catch basin will be paid for at the Contract unit price bid per each, regardless of vertical depth, complete in place as detailed in the plans and specifications, accepted, which price will be full compensation for all excavation, concrete, masonry, special or precast units, reinforcement, ladder rungs, drip stones, frames, grates, grade and slope adjustments, backfill, compaction, aggregate, castings, and for all materials, labor, equipment, tools, and incidentals necessary to complete the item as specified.

4.18 TRENCH DRAIN:

A. Trench Drain will be measured per linear foot.

B. Trench Drain will be paid for at the Contract unit price bid per linear foot, regardless of the width or depth, complete in place, accepted, which price will be full compensation for all excavation, concrete, masonry, special or precast units, reinforcement, ladder rungs, drip stones, frames, grates, grade and slope adjustments, backfill, compaction, aggregate, castings, and for all materials, labor, equipment, tools, and incidentals necessary to complete the item as specified.

4.19 8-INCH SLOTTED DRAIN:

A. 8-inch Slotted Drain will be measured per linear foot.

B. 8-inch Slotted Drain will be paid for at the Contract unit price bid per linear foot, regardless of slotted drain invert, complete in place, accepted, which price will be full compensation for all material, pipe, slots, accessories and fittings, concrete encasement, gratings, assembly and installation, and for all labor, equipment, tools, and incidentals necessary to complete the item as specified.

4.20 48-INCH PRECAST MANHOLE:

A. 48-Inch Precast Manhole will be measured per each.

B. 48-Inch Precast Manhole will be paid for at the Contract unit price bid per each, regardless of vertical depth, complete in place as detailed in the plans and specifications, accepted, which price will be full compensation for all excavation, concrete, masonry, special or precast units, reinforcement, ladder rungs, drip stones, frames, grates and covers, grade and slope adjustments, backfill, compaction, aggregate, castings, and for all materials, labor, equipment, tools, and incidentals necessary to complete the item as specified.

4.21 60-INCH PRECAST MANHOLE:

A. 60-Inch Precast Manhole will be measured per each.

B. 60-Inch Precast Manhole will be paid for at the Contract unit price bid per each, regardless of vertical depth, complete in place as detailed in the plans and specifications, accepted, which price will be full compensation for all excavation, concrete, masonry, special or precast units, reinforcement, ladder rungs, drip stones, frames, grates and covers, grade and slope adjustments, backfill, compaction, aggregate, castings, and for all materials, labor, equipment, tools, and incidentals necessary to complete the item as specified.

4.22 72-INCH PRECAST MANHOLE:

A. 72-Inch Precast Manhole will be measured per each.

B. 72-Inch Precast Manhole will be paid for at the Contract unit price bid per each, regardless of vertical depth, complete in place as detailed in the plans and specifications, accepted, which price will be full compensation for all excavation, concrete, masonry, special or precast units, reinforcement, ladder rungs, drip stones, frames, grates and covers, grade and slope adjustments, backfill, compaction, aggregate, castings, and for all materials, labor, equipment, tools, and incidentals necessary to complete the item as specified.

4.23 SWM STORAGE STRUCTURE S-1:

A. SWM Storage Structure S-1 will be measured per each.

B. SWM Storage Structure S-1 will be paid for at the Contract unit price bid per each, complete in place as detailed in the plans and specifications, accepted, which payment will be full compensation for all excavation, concrete, masonry, special or precast units, reinforcement, ladder rungs, drip stones, frames and covers, grade and slope adjustments, backfill, compaction, aggregate, castings, and for all materials, labor, equipment, tools, and incidentals necessary to complete the item as specified.

4.24 SWM STORAGE STRUCTURE S-2:

A. SWM Storage Structure S-2 will be measured per each.

B. SWM Storage Structure S-2 will be paid for at the Contract unit price bid per each, complete in place as detailed in the plans and specifications, accepted, which payment will be full compensation for all excavation, concrete, masonry, special or precast units, reinforcement, ladder rungs, drip stones, frames and covers, grade and slope adjustments, backfill, compaction, aggregate, castings, and for all materials, labor, equipment, tools, and incidentals necessary to complete the item as specified.

4.25 REMOVAL OF EXSITING DRAINAGE STRUCTURE:

A. Removal of Existing Drainage Structure will be measured per each.

B. Removal of Existing Drainage Structure will be paid at for at the Contract unit price bid per each removed, regardless of structure type and size, which payment will be full compensation for all excavation, sheeting, shoring, dewatering, hauling, removal and disposal of drainage structure, backfill, compaction, and for all materials, labor, equipment, tools, and incidentals necessary to complete the item as specified.

4.26 MODIFICATION TO EXISTING DRAINAGE STRUCTURE:

A. Modification to Existing Drainage Structure will be measured per each for the various types of structures.

B. Modification to Existing Drainage Structure will be paid for at the contract unit price bid per each, regardless of type of modification, complete in place, accepted, which price will be full compensation for all excavation, concrete, masonry, special or precast units, reinforcement, ladder rungs, drip stones, frames, grates and covers, grade and slope adjustments, backfill, compaction, aggregate, castings, and for all materials, labor, equipment, tools, and incidentals necessary to complete the item as specified.

4.27 CONCRETE ENCASEMENT:

A. Concrete encasement for HDPE pipes shall be measured per cubic yard.

B. Concrete encasement for HDPE pipes shall be paid for at contract unit price bid per cubic yard, completed in place, accepted, which payment will be full compensation for all concrete, excavation, forms, backfill, compaction, curing, disposal of excess or unsuitable material, and for all material, labor, equipment, tools, and incidentals necessary to complete the work.

4.28 CONCRETE DITCHES:

A. Concrete ditches shall be measured per square yard of finished surface.

B. The payment for Concrete Ditches will be paid for at the contract unit price bid per square yard. Payment will be full compensation for all excavation, concrete, masonry, reinforcement, grade and slope adjustments, backfill, compaction, aggregate, castings, and for all materials, labor, equipment, tools, and incidentals necessary to complete the item as specified.

END OF SECTION

SECTION 02770

CONCRETE CURBS

PART 1: GENERAL

1.01 DESCRIPTION:

A. This Section specifies construction of various types of concrete curb.

B. Related Work Specified Elsewhere:

1. Section 01130 - Construction Procedures
2. Section 01300 - Submittals
3. Section 02720 - Aggregate Base Course
4. Section 03300 - Cast-in-Place Concrete
5. Section 03400 – Precast Concrete

PART 2: PRODUCTS

2.01 CURING MATERIALS:

A. Refer to Section 03300 - Cast-in-Place Concrete.

2.02 FORM RELEASE COMPOUND:

A. Form release compound shall effectively prevent the bond of the concrete to the form. The form release compounds shall not cause discoloration of the concrete nor adversely affect the quality or rating of hardening at the interface of the form. The flash point of the form release compound shall be a minimum of 100 degrees F when tested as specified in T 73.

2.03 CONCRETE:

A. Concrete shall meet the requirements of DCDOT Std Specifications, Section 817, Class F, with air-entraining admixture.

2.04 JOINT SEALER:

A. Refer to Section 03300 - Cast-in-Place Concrete.

2.05 PREFORMED JOINT FILLER:

A. Preformed joint fillers shall conform to AASHTO M 153. The bituminous fiber type shall conform to AASHTO M 213, with the bitumen content determined by MSMT 408 or T 164. The weathering test shall be deleted for either type of material.

PART 3: EXECUTION

3.01 EXCAVATION:

A. Excavation shall be to the specified depth and to a width that permits installation and bracing of the forms. The subgrade shall be compacted to 92 percent in conformance with AASHTO T 180, Method A, and trimmed to the proper shape and required grade. All soft and unsuitable material shall be removed and replaced with suitable material approved by the Engineer.

3.02 FORMS:

A. Fixed Form Method:

1. Fixed forms shall be steel of an approved design, securely fastened and braced to prevent any movement during the placing of concrete. Forms shall extend to the full depth of the concrete. They shall not be less than 10 feet long.

2. When installation is made along curves where the radius of the curb is less than 200 feet, flexible or curved steel or wooden forms shall be used. Form sections shall not be more than 6 feet long.

3. Both wooden and steel forms shall be properly designed and acceptable to the Engineer. They shall be installed to prevent buckling or warping. The tolerance shall not exceed 1/4-inch in 10 feet in either the grade or alignment.

4. Forms shall be thoroughly cleaned and coated with form release compound each time they are used.

B. Slip-Form Method:

1. Slip-form equipment shall be approved by the Engineer and include the incorporation of automatic guidance controls to follow the line and grade references. On vertical and horizontal curves, an additional intermediate support shall be set in the field to establish a reference line acceptable to the Engineer. The use of ski or shoe

sensors reflecting variations in the grade of the existing roadway surface will not be permitted.

2. Concrete mixing shall conform to Section 03300 - Cast-in-Place Concrete. The concrete shall be of such consistency that after extrusion, it shall maintain the shape of the curb and gutter without support. Slip form equipment shall include internal vibrating capability. The surface shall be free of surface pits larger than 3/16-inch diameter. The concrete shall require no further finishing other than broomed finish.

3. If during the operation of the slip-form equipment a tear occurs, it shall be repaired immediately or removed and replaced as directed by the Engineer.

3.03 CONCRETING:

A. Mixing:

1. Concrete mixing shall conform to Section 03300 - Cast-in-Place Concrete.

B. Volumetric Batching:

1. Volumetric batching and continuous mixing will be permitted. When the subgrade is dry, it shall be moistened with as much water as it can absorb. Consolidation of concrete placed in the forms shall be by spading or other methods approved by the Engineer. Except for curb face forms, the forms shall remain in place for a minimum of 12 hours and precautions taken to avoid damaging the concrete. Curb face forms shall be stripped as soon as the concrete will retain its shape.

3.04 CONCRETE CURBS

A. Type 'B' Curb is to be MTA standard no. C-001220-03 Type ‘B’ Curb as specified in the Contract Documents.

3.05 FINISHING:

A. Concrete shall be struck off to the cross section specified after which it shall be finished, floated smooth and followed with a broom type textured finish. The Engineer may permit other methods of finishing for the purpose of matching adjacent concrete finishes. Plastering will not be permitted. All exposed edges shall be edged with a 1/4-inch edging tool except the face edge of curb shall have a 1-inch radius. When finished, the top surface of curbs and gutters as well as the faces shall show no

deviation from grade and alignment in excess of 1/4-inch per 10 feet. All honeycombed and damaged areas shall be repaired immediately after the removal of the forms in a manner acceptable to the Engineer.

3.06 JOINTS:

A. Fixed Form Method:

1. Spacing between joints shall be 10 ft except where shorter spacing is necessary for closures and conformity to expansion and contraction joints in contiguous concrete pavements. No joint spacing shall be shorter than 4 feet.

2. The joints shall be formed by using plate steel templates which are 1/8 to 3/16-inch thick and shall have a width and depth equal to the unit cross section.

3. The templates shall be set perpendicular to the grade and line of the unit. Intermediate templates or sections of templates shall not be used.

4. Where stationary structures such as inlets are encountered, an expansion joint shall be constructed for the full depth using 1/2-inch preformed expansion joint filler.

5. Expansion joints shall be constructed at a maximum of 100 feet spacing, and at points of curves, tangents and at locations coinciding with adjoining pavement joints. Only the joints in the gutter portion of the combination curb and gutter shall be sealed. Expansion joints are not required when adjacent to a flexible pavement or away from any pavement.

B. Slip-Form Method:

1. Construction or contraction joints shall be sawed or formed and shall be a minimum of 2 inches deep and 1/8-inch wide.

2. Expansion joints shall be as specified in the Contract Documents or as directed by the Engineer.

2. Joint Spacing shall be as specified in Subsection 3.07.A of this section.

3.07 COLD WEATHER CONSTRUCTION AND CURING:

A. Cold Weather Construction:

1. Refer to Section 03300 - Cast-in-Place Concrete for cold weather construction.

B. Concrete Curing:

1. Refer to Section 03300 - Cast-in-Place Concrete for curing guidelines.

3.08 BACKFILL:

A. After the forms have been stripped and any necessary repairs are satisfactorily completed, the spaces in front and back of the curb, and combination curb and gutter, shall be backfilled to the required elevations using suitable material prior to any adjacent roadway rolling.

3.08 PRECAST CONCRETE:

A. Refer to Section 03400.

PART 4: MEASUREMENT AND PAYMENT

4.01 TYPE "B" CURB:

A. Type "B" Curb will be measured per linear foot.

B. Type "B" Curb will be paid for at the contract unit price bid per linear foot, complete in place, accepted, which price will be full compensation for all material, equipment, tools, labor and all work incidental to complete the item as specified.

END OF SECTION

SECTION 08330

OVERHEAD COILING DOORS

PART 1: GENERAL

1.01 SUMMARY:

A. This Section includes the following:

1. Extent of coiling doors is indicated on the drawings.

2. Types of overhead coiling doors include the following:

a. High speed coiling doors.

3. Motors

4. Controls.

5. Electrical requirements for doors specified in Division 16.

1.02 QUALITY ASSURANCE:

A. Single Source Responsibility: Provide coiling doors complete units produced by a single manufacturer, including necessary accessories, fitting, and anchorage.

1.03 SUBMITTALS:

A. Shop Drawings: Submit shop drawings for fabrication and erection of doors. Show size of opening and clearance requirements.

B. Product Data: Submit manufacturer's product data and installation instructions for doors, including installation details.

C. Maintenance Data: Submit manufacturer's maintenance and service data, including address and telephone number of nearest authorized service representative.

PART 2: PRODUCTS

2.01 ACCEPTABLE MANUFACTURERS:

A. Manufacturers: Subject to compliance with requirements, provide products of the following:

1. Manufacturer of high speed coiling doors:

a. Overhead Door Corp.,
2501 S. State Hwy. 121, Suite 200, Lewisville, TX 75067.
Toll Free (800) 275-3290.
Phone: (469) 549-7100.
Fax: (972) 906-1499.
Web Site: www.overheaddoor.com.

b. Approved equal.

2. Model: 600 Series Coil-Away Service Doors.

2.02 COILING DOORS:

A. General: Provide the manufacturer's standard high speed roll-up doors of this type, speed, function, operation, size and construction indicated, complete with controls, panel protection devices and accessories required.

B. Type: Provide high-speed roll-up doors designed for permanent installation at the location indicated.

C. Cycle: Opening speed - 32" per second, closing speed - 32" per second.

D. Activation: Provide one or more of the following activation(s): Single button electric push button, motion detector, photo eye, or induction loop system or other approved mechanism.

E. Panel Protection Devices: Provide the manufacturer's standard devices as follows: automatic reversing contact edge; reversing photocell; "fail-safe" braking system; full width vision section(s); panel tracking sensor.

F. Panel Material: Interlocking roll-formed galvanized steel slats, flat crown profile type CAW, 24 gauge. End of each slat shall be locked from lateral movement by a staking lock system. (Galvanized alternate malleable end locks.)

G. NOT USED

H. Control: Supply manufacturer's standard NEMA 4 control box enclosure with face mounted E-stop and reset buttons. Circuitry to be factory programmed with LED diagnostic panel and of non-proprietary design using standard electrical components. Configuration shall include an electrical shunt to kill power when backup limits or panel tracking sensor contacts are made. All critical connections between motor, brake and reversing edge are to be factory pre-wired with a plug-in power cable to the control box.

I. Construction: Design and operation of the door to be such that no counter-balance or panel tensioning system requiring cables, chains, straps, springs, or pulleys to be included. Main roller assembly shall be spin tested, centerless ground and of single piece construction for precise turning properties. Ball bearings to be permanently lubricated type with drive shaft keyed directly into unitized motor/gearbox. Door shall be equipped with a 1-1/2 HP, 460 Volt/3 phase 60 Hz direct drive motor of continuous duty type rated for 350 cycles per hour and have positive brake release for manual override operation. Motor/Gearbox to have a 5-Year Unlimited Cycle Warranty from the manufacturer.

J. NOT USED

K. Heavy duty vertical guide tracks shall be a minimum 1/4-inch steel, hinged to open and of low profile design having a maximum projection of 2-7/8-inch from wall and 5-1/2-inch outboard of jamb. Internal low friction rub ails shall be of one-piece construction and easily replaceable. Full perimeter gaskets and brush seals to be included.

L. Finish and Color: Galvanized steel should not be painted.

PART 3: EXECUTION

3.01 PREPARATION

A. Coordinate installation of high-speed coiling doors. Examine conditions under which the doors are to be installed and do not proceed with the work until unsatisfactory conditions have been corrected.

3.02 INSTALLATION:

A. General: Comply with manufacturer's detailed instructions for the installation of high-speed coiling door. Electrical field wiring by electrician.

3.03 FINAL ADJUSTMENT:

A. Make necessary adjustments for safe, efficient operation of high-speed roll-up doors.

3.04 DEMONSTRATION:

A. Startup Services: Engage a factory-authorized service representative to perform startup services and to train Owner's maintenance personnel as specified below:

1. Test and adjust controls and safeties. Replace damaged and malfunctioning controls and equipment.

2. Train Owner's maintenance personnel on procedures and schedules related to startup and shutdown, troubleshooting, servicing, preventive maintenance, and procedures for testing and resetting release devices.

3. Review data in the maintenance manuals. Refer to Division 1 Section "Operation and Maintenance Data."

4. Schedule training with Owner with at least 7 days' advance notice.

3.05 WARRANTY:

A. Written warranty, executed by manufacturer agreeing to repair or replace components of overhead door assembly that fail in materials or workmanship within one year from date of substantial completion. Motor and drive gear shall have five year material and workmanship warranty. Failures include, but are not limited to, the following:

1. Excessive air leakage.

2. Faulty operation of speed-control operators and hardware.

3. Deterioration of metals, metal finishes, and other materials beyond normal weathering.

PART 4: MEASUREMENT AND PAYMENT

4.01 OVERHEAD ROLL-UP DOORS:

A. Overhead Coiling Doors will not be measured for payment.

B. Overhead Coiling Doors will not be paid for directly, but will be included in the Lump Sum price bid for the Pre-engineered Vehicle Storage Building.

END OF SECTION

SECTION 13100

MODULAR OFFICE TRAILER

PART 1 – GENERAL

1.01 SUMMARY:

A. The work specified in this Section includes furnishing a modular office trailer to the configuration shown on the drawings and placed on the site in a semi-permanent fashion.

B. The modular office trailer shall be served by municipal water and sewer facilities.

1.02 RELATED WORK:

A. The General Provisions of the contract, including General and Supplementary Conditions and Division 1 Specifications, apply to this section.

B. Related Sections include the following:

1. Division 3 Section "Cast-in-Place Concrete" for concrete foundations, slabs, and anchor-bolt installation.

2. Division 4 Section “Unit Masonry Assemblies” for foundation walls and piers.

3. Division 5 Section “Metal Fabrications” for galvanized steel hand rails.

4. Division 6 Section “Rough Carpentry” for wood entry ramps and stairs.

5. Division 15 Mechanical Sections for appropriate mechanical specifications for items shown on the plans

6. Division 16 Electrical Sections for appropriate electrical specifications for items shown on the plans.

1.03 SUBMITTALS:

A. See Section 01300 - Submittals.

B. Detailed Drawings, to include:

1. Complete construction details and schedules for the modular office trailer.

2. Plan documenting required dimensions for modular office building foundation.

3. Details documenting required bearing locations, elevations, and anchorage details for connection of the structure to the foundation walls.

4. Framing plans and details for interior walls.

5. Mechanical plans showing product specifications for an electric HVAC system, system location/layout plan, designed HVAC calculations. Venting method and system proposed for modular office trailer.

6. Plumbing plans, showing all waste and vent piping, water piping and their sizes, location of on demand water heater, and the make, model and specifications.

7. Electrical plans, showing all panel and lighting schedules, device locations, circuitry, makes, models, and specifications.

8. The drawings shall be stamped by a licensed Engineer or Architect licensed in the State of Maryland.

C. Samples: Submit two paper chip samples, 2 x 2 inch in size illustrating range of colors available for each surface finishing product scheduled.

D. Product Data: Provide data on all products being installed.

E. Maintenance Data: Provide a complete, bound operations and maintenance manual upon completion of project. Manual shall include manuals for all equipment installed, including operation, maintenance, and users guides, separated with labeled, tabbed dividers, by equipment. A maintenance chart shall be included listing all equipment and indicating maintenance required on a monthly, quarterly, semi-annual, and annual basis for each piece of equipment installed. O&M Manual shall have a cover sheet with the building name, date of project completion, and full name and address of the prime contractor and names and addresses for all sub-contractors/installers of equipment included in manual.

PART 2 – PRODUCTS

2.01 GENERAL:

A. The general rooms and arrangement, and overall square footage of the building are shown on the contract drawings. The modular office trailer shall be in full compliance with the referenced Codes and Standards.

B. Unless noted otherwise below, all appliances, fixtures, and component parts or details not specifically covered by these specifications shall be those which are considered standard or better quality for commercial building use, be energy star rated, or as approved by the Administration.

C. Ceilings will be 8’-0” high, minimum.

D. The modular office trailer shall be designed with the rooms, spaces, and accommodations as shown on the drawings.

2.02 FINISHES:

A. Walls and Ceilings: All interior wall finishes shall be “light orange peel” textured, semi-gloss painted 5/8 inch type-x gypsum board. Ceiling finish shall be pre-finished suspended acoustical ceiling panels. Wall finishes in toilet rooms shall have Fiberglass Reinforced Plastic paneling (FRP) over 5/8 inch moisture resistant type-x gypsum board.

1. Colors:

a. Siding/soffit: Selected from manufacturer’s standard colors.

b. Trim: Selected from manufacturer’s standard colors.

c. Roofing/fascia: Selected from manufacturer’s standard colors.

2. Interior colors shall be as follows:

a. Walls: Off-white (i.e., Navajo white, antique white).

b. Vinyl base: Selected from manufacturer’s standard colors.

c. Ceilings: White.

B. Toilet Rooms: The modular office trailer shall be supplied with two accessible toilet rooms (Men’s & Women’s) as shown on the contract drawings. All accessible features shall comply with ADA guidelines. Each toilet room shall have one water closet and one lavatory with hot and cold water. For lavatory use, the domestic hot water equipment shall be automatically controlled and shall have sufficient capacity to deliver 105 degree Fahrenheit (40.6°C) water for each hot water faucet at the point of use.

1. Each toilet room shall contain the following equipment:

a. One 18-inch by 36-inch mirror (centered on lavatory).

b. Toilet paper dispensers near each water closet that will hold at least two rolls and allow easy unrestricted dispensing.

c. One each: tri-fold or roll paper towel dispenser, soap dispenser, and waste receptacle for each toilet room.

C. Kitchenette: The modular office trailer shall have a kitchenette as shown on the contract drawings. The kitchenette will have the following features:

1. Single stainless steel self rimming sink with goose neck faucet.

2. Plastic laminate covered or solid oak cabinets conforming to the following:

a. Upper Cabinets:

1) Equally divided storage cabinets 36 inches tall and 12 inches deep. Each unit shall have two doors and two plastic laminate covered adjustable shelves.

2) Doors shall be provided with four inch wire pulls.

b. 24” deep Base Cabinets in three sections as follows:

1) A sink base with a pair of doors.

2) A single drawer and a cabinet with a pair of doors with an adjustable shelf.

3) An open space sized for an under counter refrigerator.

4) Plastic laminated covered marine grade plywood countertop.

D. Work Counter:

1. 7’-10”’ long by 36” wide by 36” high.

2. Cabinet to be Plastic Laminate covered or solid oak. Counter to be Plastic Laminate covered plywood.

3. Front of cabinet shall be solid. Back shall have 3 equal open compartments with two adjustable shelves in each section.

E. Lockers: See Drawings.

2.03 CONSTRUCTION:

A. Roofing: Roofing shall be steel, standing seam. Roof pitch shall be not less than 3 in 12, with all overhangs 16-inches minimum. All roof penetrations shall be made within 24-inches of the ridge of the roof and shall be painted to match roof color. Attic ventilation shall be installed continuously along ridge by manufacturer. Fascias shall be steel and match roofing in color and material.

B. Insulation: The modular office trailer shall be insulated with the following minimum resistance rating:

1. Walls R-19

2. Ceilings/roof R-44

3. Flooring R-30

C. Windows: The modular office trailer shall have windows as shown on the contract drawings. All windows shall be aluminum framed, horizontal slider style with full weather-stripping and low-E, argon filled double-glazing, with a maximum U-Value of .34. All windows must be equipped with a sturdy locking device. All window stools shall be constructed of durable products that are washable and stain proof, and shall not be constructed using gypsum board. Windows shall the 48” wide and 36” tall and mounted 36” above finish floor

D. Window Treatment: All exterior windows shall be equipped with window blinds. Horizontal blinds must have aluminum slats of one-inch width or less. The window blinds must have non-corroding mechanisms and synthetic tapes.

E. Doors:

1. Exterior Doors: All exterior doors shall be 1-3/4 inch thick x 36 inches wide x 80 inches tall insulated metal doors. All exterior door hardware shall meet ADA requirements and have a satin chrome or satin stainless steel (US26D or US32D) finish. Provide closers. Provide wall mounted 8-inch by 15-inch minimum, red photo luminescent exit signs centered above interior trim on every exterior door.

2. Interior Doors: All interior doors shall be a minimum of 36 inches wide by 80 inches tall. Doors must be solid core, 1-3/4 inches thick, with natural wood veneer face. They shall be operable by a single effort and must be in accordance with applicable building code requirements. All interior door hardware shall meet ADA requirements and have a satin chrome or satin stainless steel (US26D or US32D) finish.

3. Door Hardware: All door hardware shall meet the applicable building code and ADA requirements. Exit doors must be equipped with kick plates, pull bars or handles, and automatic door closures. All locks must be master keyed. The Administration must be furnished at least two master keys and two keys for each lock. The Administration shall approve the keying schedule for all doors.

4. Thresholds: All exterior doors to have aluminum thresholds that meet ADA requirements.

F. Room Identification: Door identification shall be installed in approved locations adjacent to office entrances. Toilet doors must be identified by the international symbol of accessibility and wherever possible, mounted on the wall at the latch side of the door. All signs must be a standard product line, which is easily interchangeable and readily available. All signage must meet ADA requirements.

G. Floor Covering and Base: Floor covering shall be as indicated below. Base shall be vinyl throughout. All floor covering must meet ADA, EPA and OSHA environmental health and safety requirements.

1. Office Areas: Provide carpet or carpet tiles in all offices, hallways and conference rooms, including the reception area. Provide the Administration with a minimum of 5 samples that vary in color. The Administration must approve the sample and color.

2. Kitchenette: Provide VCT flooring to extents shown on the drawings. The Administration must approve the sample and color.

3. Toilet Rooms: Vinyl sheet flooring shall be used in all toilet and service areas. All surfaces shall be sealed to prevent water absorption. The Administration must approve the sample and color.

4. Files/Computers: Provide VCT flooring to the extents shown on the drawings. The Administration must approve the sample and color.

H. Exterior Siding: Siding shall be painted wood, T-111 or as approved by the Administration. Consult Administration for color.

2.04 STRUCTURAL:

A. The modular office trailer shall be designed for a ground snow load of 35-pounds per square foot (PSF), and designed wind loads of 90 miles per hour (MPH), exposure B, and shall conform to the current adopted version

of the International Building Code and meet all seismic requirements of this code.

B. The modular office trailer shall be set on a foundation support system as shown on the drawings. Design and construction of the anchorage of the modular office to the building foundation shall conform to the current adopted version of the International Building Code and meet all seismic requirements of this code.

C. Engineered, stamped drawings and calculations for the building foundation anchorage (hold downs), floor and roof structures, and load bearing walls and beams shall be submitted for approval as part of the submittal process described above.

2.05 SITE WORK:

A. Building manufacturer shall coordinate with the general contractor to ensure all utilities and site work are completed prior to delivery. The building manufacturer shall construct and install the foundation support system and skirting around the building.

2.06 MECHANICAL:

A. Both hot and cold water shall be properly supplied the toilet room lavatories and kitchenette sink. Cold water shall be properly supplied the toilet room water closets. The water service line shall be connected to the proposed water system as shown on the Site Plan.

B. Water supply and drain, Waste and Vent piping shall be designed and installed in conformance with the current adopted version of the International Plumbing Code, and State and local codes, which ever is more stringent.

C. Provide an electric instantaneous water heater, sized to meet the demand requirements for 10 people. Locate water heater to minimize hot water line runs.

D. All exhaust fans shall be sized for rooms where they are located per IBC and IMC requirements and shall be sound rated at a maximum of 3 sones. All fans shall be switched separately. Install exhaust fans in the toilet rooms.

E. Heating and Air Conditioning: Provide a ducted electric heating and cooling system capable of maintaining temperatures between 75 and 78 degrees for cooling and between 68 and 70 degrees for heating. These temperatures must be maintained year round, regardless of outside temperatures, during the hours of operation. Provide and install

programmable thermostats, capable of night setbacks. Outside air requirements shall be determined as per IMC.

2.07 ELECTRICAL:

A. Electrical equipment meet the requirements of the following specification sections:

1. 16020 – Basic Electrical Materials

B. The building shall be provided with a complete and operable electric system, including service lateral conduit, load center, grounding, boxes, branch circuits, and all devices. Size all panels, transfer switches, cables, fuses, disconnects, breakers, conduits, and boxes in accordance with codes and as required by loads.

C. Main power distribution panel board shall be circuit breaker type, 3-phase, 208/120 volt, with a 100 amp main circuit breaker. The power distribution panel board shall be supplied with an equipment ground bus and full neutral bus. All power distribution equipment shall be required to handle the actual specified and projected loads with 25% spare circuit spaces and capacity. Feeders and branch circuits shall have equipment grounding conductors ran with circuit conductors. The electrical distribution system shall be protected from surges. Wiring devices and Components to be U.L. approved, with a two (2) year period of Warrantee.

D. All outlets shall be marked and coded for ease of circuit tracing. All floor outlets must be flush with the plane of the finished floor with closable outlet covers. All receptacle outlets shall be commercial specification grade or better. Outlets located on walls shall meet ADA mounting height requirements.

E. Electrical receptacle outlets shall be installed in locations shown on the contract drawings. One outlet above the counter in the kitchen shall have a dedicated circuit and be labeled ‘Microwave’.

F. No more than six duplex outlets may be installed on a 20-amp circuit in the offices. Outlets must be circuited separately from lighting.

G. Provide lighting in each space to meet levels per the current IESNA Lighting Handbook. Fixtures shall have parabolic type troffers, T-8 lamps, and electronic ballasts. Lighting in each space shall be controlled by occupancy sensor with manual override.

H. Provide outdoor light fixtures mounted to the trailer to light the area around each entrance to the trailer controlled by photocell and motion sensor combination.

I. Provide egress and exit sign lighting in accordance with NFPA 101 – Life Safety Code.

2.08 VOICE/DATA:

A. Distribution: Work area telecommunications outlets shall be installed in locations shown on the contract drawings.

B. Equipment: Provide the telecommunications (voice and data) wiring. This data wiring must meet specifications listed under EIA Commercial Building Telecommunications Wiring Standard, EIA/TIA 568, 568A, and EIA Commercial Building Telecommunications Pathways and Spaces, EIA/TIA-569. All telecommunication wiring shall be run to the computer room and coiled up with ten feet of slack.

C. A service entrance shall be provided to accommodate a telephone company entrance cable. The service entrance shall be large enough to accommodate at least one 50-pair telephone cable and an additional pull wire, a minimum of 4-inch (10.16cm) conduit is required. Provide a second capped 4” conduit from the computer room to the exterior edge of the building foundation for future lines. The interior end of the service entrance shall be terminated within the computer room.

D. Telephone Service: Provide all equipment and fees required by the telephone company to make the service connection.

PART 3 – EXECUTION

3.01 INSTALLATION:

A. Install the modular office trailer with all the features specified herein conforming to the local building codes and having the specified basic features with any substitute materials subject to approval by the Administration.

PART 4 – MEASUREMENT AND PAYMENT

4.01 MODULAR OFFICE TRAILER:

A. The Modular Office Trailer will not be measured for payment.

B. The Modular Office Trailer will be paid for at the Lump Sum price bid, which shall be full compensation for all labor, materials (including foundations and entrance ramps), equipment, and incidentals necessary to complete the item as specified.

END OF SECTION

SECTION 13601

METAL INSPECTION PLATFORM

PART 1: GENERAL

1.01 RELATED DOCUMENTS

A. Drawings and general provisions of the Contract, including General and Supplementary Conditions and Division 1 Specification Sections, apply to this Section.

1.02 SUMMARY

A. This Section includes Metal Inspection Platform that consists of integrated sets of mutually dependent components including structural framing, roof panels, soffit panels, and accessories.

B. Related Sections include the following:

1. Division 3 Section "Cast-in-Place Concrete" for concrete foundations, slabs, and anchor-bolt installation.

2. Division 7 Section "Building Insulation" for insulation installed in metal roof panel assemblies.

3. Division 9 painting Sections for finish painting of shop-primed structural framing.

1.03 DEFINITIONS

A. Bay: Dimension between main frames measured normal to frame (at centerline of frame).

B. Building Length: Dimension of the building measured perpendicular to main framing from plane of first frame to plane of last frame.

C. Building Width: Dimension of the building measured parallel to main framing from centerline of columns at Retaining Wall C to centerline of columns at caissons.

D. Clear Span: Distance between supports of beams.

E. Terminology Standard: Refer to MBMA's "Metal Building Systems Manual" for definitions of terms for metal building system construction not otherwise defined in this Section or in referenced standards.

1.04 SYSTEM DESCRIPTION

A. General: Provide a complete, integrated set of metal Inspection Platform manufacturer's standard mutually dependent components and assemblies that form a Metal Inspection Platform capable of withstanding structural and other loads, thermally induced movement, and exposure to weather without failure or infiltration of water into building interior. Include primary and secondary framing, metal roof panels, metal wall panels, and accessories complying with requirements indicated.

1. Provide metal Inspection Platform of size and with spacings, slopes, and spans indicated.

B. Primary Frame Type:

1. Rigid Clear Span: Solid-member, structural-framing system without interior columns.

C. Secondary Frame Type: Manufacturer's standard purlins and joists and flush-framed girts.

D. Bay Spacing: 20 feet.

E. Roof Slope: 1 inch per 3.25 inches (1:3.25).

F. Roof System: Manufacturer's standard vertical-rib, standing-seam metal roof panels.

1.05 SYSTEM PERFORMANCE REQUIREMENTS

A. Structural Performance: Provide metal Inspection Platform capable of withstanding the effects of gravity loads and the following loads and stresses within limits and under conditions indicated:

1. Engineer metal Inspection Platform according to procedures in MBMA's "Metal Building System Manual."

2. Design Loads: As indicated on Drawings.

3. Design Loads: As required by ASCE 7, "Minimum Design Loads for Buildings and Other Structures."

4. Live Loads: Include vertical loads induced by the building occupancy indicated on Drawings. Include loads induced by maintenance workers, materials, and equipment for roof live loads.

a. Building Occupancy: As indicated on Drawings.

5. Roof Snow Loads: Include vertical loads induced by the weight of snow,

as determined by 50-year, mean-recurrence-interval ground snow load at Project site of Washington, DC. Allow for unbalanced and drift loads.

6. Wind Loads: Include horizontal loads induced by a basic wind speed corresponding to a 50-year, mean-recurrence interval at Project site of Washington, DC.

7. Collateral Loads: Include additional dead loads other than the weight of metal building system for permanent items such as sprinklers, mechanical systems, electrical systems, and ceilings, as documented on Drawings.

8. Load Combinations: Design metal Inspection Platform to withstand the most critical effects of load factors and load combinations as required by ASCE 7, "Minimum Design Loads for Buildings and Other Structures."

9. Deflection Limits: Engineer assemblies to withstand design loads with deflections no greater than the following:

   a. Purlins and Rafters: Vertical deflection of 1/240 of the span.

   b. Girts: Horizontal deflection of 1/240 of the span.

   c. Metal Roof Panels: Vertical deflection of 1/240 of the span.

10. Design secondary framing system to accommodate deflection of primary building structure and construction tolerances, and to maintain clearances at openings.

11. Provide metal panel assemblies capable of withstanding the effects of loads and stresses indicated, based on testing according to ASTM E 1592.

B. Seismic Performance: Design and engineer metal Inspection Platform capable of withstanding the effects of earthquake motions determined according to ASCE 7, "Minimum Design Loads for Buildings and Other Structures": Section 9, "Earthquake Loads."

C. Thermal Movements: Provide metal panel systems that allow for thermal movements resulting from the following maximum change (range) in ambient and surface temperatures by preventing buckling, opening of joints, overstressing of components, failure of joint sealants, failure of connections, and other detrimental effects. Base engineering calculation on surface temperatures of materials due to both solar heat gain and nighttime-sky heat loss.

1. Temperature Change (Range): 120 deg F (67 deg C), ambient; material surfaces.

D. Thermal Performance: Provide insulated metal panel assemblies with the following maximum U-factors and minimum R-values for opaque elements when tested according to ASTM C 1363 or ASTM C 518:

1. Metal Roof Panel Assemblies:

a. R-Value: 20.

E. Water Penetration for Metal Roof Panels: No water penetration when tested according to ASTM E 1646 at test-pressure difference of 2.86 lbf/sq. ft. (137 Pa).

F. Wind-Uplift Resistance: Provide metal roof panel assemblies that comply with UL 580 for Class 90.

1.06 SUBMITTALS

A. Product Data: Include construction details, material descriptions, dimensions of individual components and profiles, and finishes for each type of the following metal building system components:

1. Structural-framing system.

2. Metal roof panels.

3. Flashing and trim.

4. Accessories.

B. Shop Drawings: For the following metal Inspection Platform components. Include plans, elevations, sections, details, and attachments to other work.

1. For installed products indicated to comply with design loads, include structural analysis data signed and sealed by the qualified professional engineer responsible for their preparation.

2. Anchor-Bolt Plans: Submit anchor-bolt plans before foundation work begins. Include location, diameter, and projection of anchor bolts required to attach metal building to foundation. Indicate column reactions at each location.

3. Structural-Framing Drawings: Show complete fabrication of primary and secondary framing; include provisions for openings. Indicate welds and bolted connections, distinguishing between shop and field applications. Include transverse cross-sections.

a. Show provisions for attaching roof curbs.

4. Metal Roof Layout Drawings: Show layouts of metal panels including methods of support. Include details of edge conditions, joints, panel profiles, corners, anchorages, trim, flashings, closures, and special details. Distinguish between factory- and field-assembled work; show locations of exposed fasteners.

5. Accessory Drawings: Include details of the following items, at a scale of not less than 1-1/2 inches per 12 inches (1:8):

   a. Flashing and trim.

   b. Gutters.

   c. Downspouts.

   d. Plexiglass

C. Samples for Initial Selection: For each type of building component with factory-applied color finish.

D. Samples for Verification: For each type of exposed finish required, prepared on Samples of sizes indicated below.

1. Metal Roof: Nominal 12 inches (300 mm) long by actual panel width. Include fasteners, closures, and other exposed panel accessories.

2. Flashing and Trim: Nominal 12 inches (300 mm) long. Include fasteners and other exposed accessories.

3. Plexiglass

4. Accessories: Nominal 12-inch- (300-mm-) long Samples for each type of accessory.

E. Product Certificates: For each type of metal building system, signed by product manufacturer.

1. Letter of Design Certification: Signed and sealed by a qualified professional engineer. Include the following:

   a. Name and location of Project.

   b. Order number.

   c. Name of manufacturer.

   d. Name of Contractor.

e. Building dimensions including width, length, height, and roof slope.

f. Indicate compliance with AISC standards for hot-rolled steel and AISI standards for cold-rolled steel, including edition dates of each standard.

g. Governing building code and year of edition.

h. Design Loads: Include dead load, roof live load, collateral loads, roof snow load, deflection, wind loads/speeds and exposure, seismic design category or effective peak velocity-related acceleration/peak acceleration, and auxiliary loads (cranes).

i. Load Combinations: Indicate that loads were applied acting simultaneously with concentrated loads, according to governing building code.

j. Building-Use Category: Indicate category of building use and its effect on load importance factors.

k. AISC Certification for Category MB: Include statement that metal building system and components were designed and produced in an AISC-Certified Facility by an AISC-Certified Manufacturer.

F. Welding certificates.

G. Erector Certificate: Signed by manufacturer certifying that erector complies with requirements.

H. Manufacturer Certificate: Signed by manufacturer certifying that products comply with requirements.

I. Qualification Data: For Erector manufacturer.

J. Material Test Reports: Signed by manufacturers certifying that the following products comply with requirements:

1. Structural steel including chemical and physical properties.

2. Bolts, nuts, and washers including mechanical properties and chemical analysis.

3. Tension-control, high-strength, bolt-nut-washer assemblies.

4. Shop primers.

5. Nonshrink grout.

6. Plexiglass

K. Source quality-control test reports.

L. Field quality-control test reports.

M. Product Test Reports: Based on evaluation of comprehensive tests performed by manufacturer and witnessed by a qualified testing agency, for insulation and vapor retarders. Include reports for thermal resistance, fire-test-response characteristics, water-vapor transmission, and water absorption.

N. Surveys: Show final elevations and locations of major members. Indicate discrepancies between actual installation and the Contract Documents. Have surveyor who performed surveys certify their accuracy.

O. Maintenance Data: For metal panel finishes to include in maintenance manuals.

P. Warranties: Special warranties specified in this Section.

Q. Other Action Submittals:

1.07 QUALITY ASSURANCE

A. Erector Qualifications: An experienced erector who has specialized in erecting and installing work similar in material, design, and extent to that indicated for this Project and who is acceptable to manufacturer.

B. Manufacturer Qualifications: A qualified manufacturer and member of MBMA.

1. AISC Certification for Category MB: An AISC-Certified Manufacturer that designs and produces metal Inspection Platform and components in an AISC-Certified Facility.

2. Engineering Responsibility: Preparation of Shop Drawings and comprehensive engineering analysis by a qualified professional engineer, registered in Washington, DC.

C. Land Surveyor Qualifications: A professional land surveyor who is legally qualified to practice in jurisdiction where Project is located and who is experienced in providing surveying services of the kind indicated.

D. Testing Agency Qualifications: An independent agency qualified according to ASTM E 329 for testing indicated, as documented according to ASTM E 548.

E. Source Limitations: Obtain primary metal building system components, including structural framing and metal panel assemblies, through one source from a single manufacturer.

F. Product Options: Drawings indicate size, profiles, and dimensional requirements of metal building system and are based on the specific system indicated. Refer to Division 1 Section "Product Requirements."

1. Do not modify intended aesthetic effects, as judged solely by Architect, except with Architect's approval. If modifications are proposed, submit comprehensive explanatory data to Architect for review.

G. Welding: Qualify procedures and personnel according to AWS D1.1, "Structural Welding Code--Steel," and AWS D1.3, "Structural Welding Code--Sheet Steel."

H. Structural Steel: Comply with AISC's "Specification for Structural Steel Buildings--Allowable Stress Design, Plastic Design," or AISC's "Load and Resistance Factor Design Specification for Structural Steel Buildings," for design requirements and allowable stresses.

I. Cold-Formed Steel: Comply with AISI's "Specification for the Design of Cold-Formed Steel Structural Members," or AISI's "Load and Resistance Factor Design Specification for Steel Structural Members," for design requirements and allowable stresses.

J. Fire-Resistance Ratings: Where indicated, provide metal panel assemblies identical to those of assemblies tested for fire resistance per ASTM E 119 by a testing and inspecting agency acceptable to authorities having jurisdiction.

1. Combustion Characteristics: ASTM E 136.

2. Fire-Resistance Ratings: Indicated by design designations from UL's "Fire Resistance Directory" or from the listings of another testing and inspecting agency.

3. Metal panels shall be identified with appropriate markings of applicable testing and inspecting agency.

K. Surface-Burning Characteristics: Provide field-insulated metal panels having thermal insulation and vapor-retarder-facing materials with the following surface-burning characteristics as determined by testing identical products per ASTM E 84 by UL or another testing and inspecting agency acceptable to authorities having jurisdiction:

1. Flame-Spread Index: 25 or less, unless otherwise indicated.

2. Smoke-Developed Index: 450 or less, unless otherwise indicated.

L. Pre-Erection Conference: Conduct conference at Project site to comply with requirements in Division 1 Section "Project Management and Coordination." Review methods and procedures related to metal Inspection Platform including, but not limited to, the following:

1. Inspect and discuss condition of foundations and other preparatory work performed by other trades.

2. Review structural load limitations.

3. Review and finalize construction schedule and verify availability of materials, Erector's personnel, equipment, and facilities needed to make progress and avoid delays.

4. Review required testing, inspecting, and certifying procedures.

5. Review weather and forecasted weather conditions and procedures for unfavorable conditions.

M. Preinstallation Roof Assembly Conference: Conduct conference at Project site to comply with requirements in Division 1 Section "Project Management and Coordination." Review methods and procedures related to metal roof panel assemblies including, but not limited to, the following:

1. Examine purlin and rafter conditions for compliance with requirements, including flatness and attachment to structural members.

2. Review structural limitations of purlins and rafters during and after roofing.

3. Review flashings, special roof details, roof drainage, roof penetrations, equipment curbs, and condition of other construction that will affect metal roof panels.

4. Review temporary protection requirements for metal roof panel assembly during and after installation.

5. Review roof observation and repair procedures after metal roof panel installation.

1.08 DELIVERY, STORAGE, AND HANDLING

A. Deliver components, sheets, panels, and other manufactured items so as not to be damaged or deformed. Package metal panels for protection during transportation and handling.

B. Unload, store, and erect metal panels in a manner to prevent bending, warping, twisting, and surface damage.

C. Stack metal panels horizontally on platforms or pallets, covered with suitable weathertight and ventilated covering. Store metal panels to ensure dryness and with positive slope for drainage of water. Do not store metal panels in contact with other materials that might cause staining, denting, or other surface damage.

1.09 PROJECT CONDITIONS

A. Weather Limitations: Proceed with installation only when weather conditions permit metal panels to be installed according to manufacturers' written instructions and warranty requirements.

B. Field Measurements:

1. Established Dimensions for Foundations: Comply with established dimensions on approved anchor-bolt plans, establishing foundation dimensions and proceeding with fabricating structural framing without field measurements. Coordinate anchor-bolt installation to ensure that actual anchorage dimensions correspond to established dimensions.

2. Established Dimensions for Metal Panels: Where field measurements cannot be made without delaying the Work, either establish framing and opening dimensions and proceed with fabricating metal panels without field measurements, or allow for field trimming metal panels. Coordinate construction to ensure that actual building dimensions, locations of structural members, and openings correspond to established dimensions.

1.10 COORDINATION

A. Coordinate size and location of concrete foundations and casting of anchor-bolt inserts into foundation walls and footings. Concrete, reinforcement, and formwork requirements are specified in Division 3 Section "Cast-in-Place Concrete."

B. Coordinate installation of roof curbs, equipment supports and roof penetrations, which are specified in Division 7 Section "Roof Accessories."

C. Coordinate metal panel assemblies with rain drainage work, flashing, trim, and construction of supports and other adjoining work to provide a leakproof, secure, and noncorrosive installation.

1.11 WARRANTY

A. Special Warranty on Metal Panel Finishes: Manufacturer's standard form in which manufacturer agrees to repair finish or replace metal panels that show evidence of deterioration of factory-applied finishes within specified warranty period.

1. Siliconized Polyester Finish: Deterioration includes, but is not limited to, the following:

a. Color fading more than 15 Hunter units when tested according to ASTM D 2244.

b. Chalking in excess of a No. 2 rating when tested according to ASTM D 4214.

c. Cracking, checking, peeling, or failure of paint to adhere to bare metal.

2. Fluoropolymer Finish: Deterioration includes, but is not limited to, the following:

a. Color fading more than 5 Hunter units when tested according to ASTM D 2244.

b. Chalking in excess of a No. 8 rating when tested according to ASTM D 4214.

c. Cracking, checking, peeling, or failure of paint to adhere to bare metal.

3. Finish Warranty Period: 20 years from date of Substantial Completion.

B. Special Weathertightness Warranty for Standing-Seam Metal Roof Panels: Manufacturer's standard form in which manufacturer agrees to repair or replace standing-seam, metal roof panel assemblies that fail to remain weathertight, including leaks, within specified warranty period.

1. Warranty Period: 20 years from date of Substantial Completion.

PART 2: PRODUCTS

2.01 MANUFACTURERS

A. Available Manufacturers: Subject to compliance with requirements, manufacturers offering products that may be incorporated into the Work include, but are not limited to, the following:

B. Manufacturers: Subject to compliance with requirements, provide products by one of the following:

C. Basis-of-Design Product: Subject to compliance with requirements, provide the named product or a comparable product by one of the following:

1. American Steel Building Company, Inc.; Division of NCI Inspection Platform, LLP.

2. Butler Manufacturing Company.

3. Ceco Inspection Platform; Division of Robertson-Ceco Corporation.

4. Mesco Metal Buildings; Division of NCI Inspection Platform, LLP.

5. Metallic Metal Building Company; Division of NCI Inspection Platform, LLP.

6. United Structures of America, Inc.

7. VP Buildings, Inc.; a United Dominion Company.

2.02 STRUCTURAL-FRAMING MATERIALS

A. W-Shapes: ASTM A 992/A 992M; ASTM A 572/A 572M, Grade 50; or ASTM A 529/A 529M, Grade 50.

B. Channels, Angles, M-Shapes, and S-Shapes: ASTM A 36/A 36M; ASTM A 572/A 572M, Grade 50; or ASTM A 529/A 529M, Grade 50.

C. Plate and Bar: ASTM A 36/A 36M; ASTM A 572/A 572M, Grade 50; or ASTM A 529/A 529M, Grade 50.

D. Steel Pipe: ASTM A 53/A 53M, Type E or S, Grade B.

E. Cold-Formed Hollow Structural Sections: ASTM A 500, Grade B or C, structural tubing.

F. Structural-Steel Sheet: Hot-rolled, ASTM A 1011/A 1011M, Structural Steel (SS), Grades 30 through 55 (205 through 380), or High-Strength Low Alloy Steel (HSLAS), Grades 45 through 70 (310 through 480); or cold-rolled, ASTM A 1008/A 1008M, Structural Steel (SS), Grades 25 through 80 (170 through 550), or High-Strength Low Alloy Steel (HSLAS), Grades 45 through 70 (310 through 480).

G. Metallic-Coated Steel Sheet: ASTM A 653/A 653M, Structural Steel (SS), Grades 33 through 80 (230 through 550) or High-Strength Low Alloy Steel (HSLAS), Grades 50 through 80 (340 through 550); with G60 (Z180) coating designation; mill phosphatized.

H. Metallic-Coated Steel Sheet Prepainted with Coil Coating: Steel sheet metallic coated by the hot-dip process and prepainted by the coil-coating process to comply with ASTM A 755/A 755M.

1. Zinc-Coated (Galvanized) Steel Sheet: ASTM A 653/A 653M, Structural Steel (SS), Grades 33 through 80 (230 through 550) or High-Strength Low Alloy Steel (HSLAS), Grades 50 through 80 (340 through 550); with G90 (Z275) coating designation.

I. Non-High-Strength Bolts, Nuts, and Washers: ASTM A 307, Grade A (ASTM F 568M, Property Class 4.6), carbon-steel, hex-head bolts; ASTM A 563

(ASTM A 563M) carbon-steel hex nuts; and ASTM F 844 plain (flat) steel washers.

1. Finish: Hot-dip zinc coating, ASTM A 153/A 153M, Class C.

J. High-Strength Bolts, Nuts, and Washers: ASTM A 325 (ASTM A 325M), Type 1, heavy hex steel structural bolts; ASTM A 563 (ASTM A 563M) heavy hex carbon-steel nuts; and ASTM F 436 (ASTM F 436M) hardened carbon-steel washers.

1. Finish: Hot-dip zinc coating, ASTM A 153/A 153M, Class C.

2. Tension-Control, High-Strength Bolt-Nut-Washer Assemblies: ASTM F 1852, Type 1, heavy-hex-head steel structural bolts with splined ends.

K. Unheaded Anchor Rods: ASTM F 1554, Grade 36, ASTM A 36/A 36M, ASTM A 307, Grade A.

1. Configuration: Straight.

2. Nuts: ASTM A 563 (ASTM A 563M) heavy hex carbon steel.

3. Plate Washers: ASTM A 36/A 36M carbon steel.

4. Washers: ASTM F 436 (ASTM F 436M) hardened carbon steel.

5. Finish: Hot-dip zinc coating, ASTM A 153/A 153M, Class C.

L. Headed Anchor Rods: ASTM F 1554, Grade 36 ASTM A 307, Grade A, straight.

1. Nuts: ASTM A 563 (ASTM A 563M) heavy hex carbon steel.

2. Plate Washers: ASTM A 36/A 36M carbon steel.

3. Washers: ASTM F 436 (ASTM F 436M) hardened carbon steel.

4. Finish: Hot-dip zinc coating, ASTM A 153/A 153M, Class C.

M. Threaded Rods: ASTM A 36/A 36M, ASTM A 307, Grade A.

1. Nuts: ASTM A 563 (ASTM A 563M) heavy hex carbon steel.

2. Washers: ASTM F 436 (ASTM F 436M) hardened carbon steel.

3. Finish: Hot-dip zinc coating, ASTM A 153/A 153M, Class C.

N. Primer: SSPC-Paint 15, Type I, red oxide.

2.03 FRAME MATERIALS

A. Cold-Rolled Steel Sheet: ASTM A 1008/A 1008M, Commercial Steel (CS), Type B, suitable for exposed applications.

B. Hot-Rolled Steel Sheet: ASTM A 1011/A 1011M, Commercial Steel (CS), Type B; free of scale, pitting, or surface defects; pickled and oiled.

C. Metallic-Coated Steel Sheet: ASTM A 653/A 653M, Commercial Steel (CS), Type B; with G60 (Z180) zinc (galvanized) or A60 (ZF180) zinc-iron-alloy (galvannealed) coating designation.

2.04 MISCELLANEOUS MATERIALS

A. Fasteners: Self-tapping screws, bolts, nuts, self-locking rivets and bolts, end-welded studs, and other suitable fasteners designed to withstand design loads. Provide fasteners with heads matching color of materials being fastened by means of plastic caps or factory-applied coating.

1. Fasteners for Metal Roof Panels: Self-drilling or self-tapping, zinc-plated, hex-head carbon-steel screws, with a stainless-steel cap or zinc-aluminum-alloy head and EPDM or neoprene sealing washer.

2. Fasteners for Metal Roof: Self-drilling Type 410 stainless-steel or self-tapping Type 304 stainless-steel or zinc-alloy-steel hex washer head, with EPDM or PVC washer under heads of fasteners bearing on weather side of metal panels.

3. Fasteners for Flashing and Trim: Blind fasteners or self-drilling screws with hex washer head.

B. Bituminous Coating: Cold-applied asphalt mastic, SSPC-Paint 12, compounded for 15-mil (0.4-mm) dry film thickness per coat. Provide inert-type noncorrosive compound free of asbestos fibers, sulfur components, and other deleterious impurities.

C. Nonmetallic, Shrinkage-Resistant Grout: ASTM C 1107, factory-packaged, nonmetallic aggregate grout, noncorrosive, nonstaining, mixed with water to consistency suitable for application and a 30-minute working time.

D. Metal Panel Sealants:

1. Sealant Tape: Pressure-sensitive, 100 percent solids, gray polyisobutylene compound sealant tape with release-paper backing. Provide permanently elastic, nonsag, nontoxic, nonstaining tape of manufacturer's standard size.

2. Joint Sealant: ASTM C 920; one-part elastomeric polyurethane, polysulfide, or silicone-rubber sealant; of type, grade, class, and use classifications required to seal joints in metal panels and remain weathertight; and as recommended by metal building system manufacturer.

2.05 FABRICATION, GENERAL

A. General: Design components and field connections required for erection to permit easy assembly.

1. Mark each piece and part of the assembly to correspond with previously prepared erection drawings, diagrams, and instruction manuals.
2. Fabricate structural framing to produce clean, smooth cuts and bends. Punch holes of proper size, shape, and location. Members shall be free of cracks, tears, and ruptures.

B. Tolerances: Comply with MBMA's "Metal Building System Manual": Chapter IV, Section 9, "Fabrication and Erection Tolerances."

C. Inspection Platform:

1. Fabricated walkway grating shall be galvanized steel with opening dimensions as shown on the plans.
2. Structural steel angle frames anchored to supporting structure.
3. Grate sections of convenient lengths for handling and lifting.
4. Bolts: Stainless steel.

D. Metal Stairs and Ship's Ladder:

1. Fabricated of structural steel.
2. Metal stairs welded in accordance with AWS Bridge Welding Code D1.1/D1.1M.
3. Designed in accordance with AISC Specifications for the Design, Fabrication and Erection of Structural Steel for Buildings, NAAMM Standard for Steel Stairs, and applicable OSHA requirements.
4. Treads, platforms and landings fabricated of steel plate with nonslip surface or steel grating as shown.

5. As far as practicable, holes for rivets, bolts and screws located in concealed positions.

6. Metal stairs and ship's ladders galvanized after fabrication.

E. Metal Panels: Fabricate and finish metal panels at the factory to greatest extent possible, by manufacturer's standard procedures and processes, as necessary to fulfill indicated performance requirements. Comply with indicated profiles and with dimensional and structural requirements.

1. Provide panel profile, including major ribs and intermediate stiffening ribs, if any, for full length of metal panel.

F. Corrosion-Resistant Grating:

1. Fabricated from high-strength low-alloy structural steel.

2. Gratings and related supports capable of supporting uniformly distributed live load shown or specified.

3. Grating system fabricated to mechanically secure units in place and permit removal in sections of such size that one man can handle.

4. Unless otherwise shown, two-inch by 3/16-inch bearing bars spaced at five inches on centers with cross bars at end of six foot long units, each unit electroforged or pressure-locked.

2.06 STRUCTURAL FRAMING

A. General:

1. Primary Framing: Shop fabricate framing components to indicated size and section with base plates, bearing plates, stiffeners, and other items required for erection welded into place. Cut, form, punch, drill, and weld framing for bolted field assembly.

a. Make shop connections by welding or by using high-strength bolts.

b. Join flanges to webs of built-up members by a continuous submerged arc-welding process.

c. Brace compression flange of primary framing with steel angles or cold-formed structural tubing between frame web and purlin or girt web, so flange compressive strength is within allowable limits for any combination of loadings.

d. Weld clips to frames for attaching secondary framing members.

e. Shop Priming: Prepare surfaces for shop priming according to SSPC-SP 2. Shop prime primary structural members with specified primer after fabrication.

2. Secondary Framing: Shop fabricate framing components to indicated size and section by roll-forming or break-forming, with baseplates, bearing plates, stiffeners, and other plates required for erection welded into place. Cut, form, punch, drill, and weld secondary framing for bolted field connections to primary framing.

a. Make shop connections by welding or by using non-high-strength bolts.

b. Shop Priming: Prepare uncoated surfaces for shop priming according to SSPC-SP 2. Shop prime uncoated secondary structural members with specified primer after fabrication.

B. Primary Framing: Manufacturer's standard structural primary framing system, designed to withstand required loads and specified requirements. Primary framing includes transverse and lean-to frames; rafter, rake, and canopy beams; and corner columns; and wind bracing.

1. General: Provide frames with attachment plates, bearing plates, and splice members. Factory drill for field-bolted assembly. Provide frame span and spacing indicated.

a. Slight variations in span and spacing may be acceptable if necessary to meet manufacturer's standard, as approved by Architect.

2. Rigid Clear-Span Frames: I-shaped frame sections fabricated from shop-welded, built-up steel plates or structural-steel shapes. Interior columns are not permitted.

3. Frame Configuration: Single gable.

4. Rafter Type: Uniform depth or Tapered.

C. Secondary Framing: Manufacturer's standard secondary framing members, including purlins, girts, eave struts, flange bracing, base members, gable angles, clips, headers, jambs, and other miscellaneous structural members. Fabricate framing from cold-formed, structural-steel sheet or roll-formed, metallic-coated steel sheet prepainted with coil coating, unless otherwise indicated, to comply with the following:

1. Purlins: C- or Z-shaped sections; fabricated from minimum 0.0598-inch- (1.5-mm-) thick steel sheet, built-up steel plates, or structural-steel shapes; minimum 2-1/2-inch- (64-mm-) wide flanges.

a. Depth: As required to comply with system performance requirements.

2. Girts: C- or Z-shaped sections; fabricated from minimum 0.0598-inch- (1.5-mm-) thick steel sheet, built-up steel plates, or structural-steel shapes. Form ends of Z-sections with stiffening lips angled 40 to 50 degrees to flange and with minimum 2-1/2-inch- (64-mm-) wide flanges.

a. Depth: As required to comply with system performance requirements.

3. Eave Struts: Unequal-flange, C-shaped sections; fabricated from 0.0598-inch- (1.5-mm-) thick steel sheet, built-up steel plates, or structural-steel shapes; to provide adequate backup for metal panels.

4. Flange Bracing: Minimum 2-by-2-by-1/8-inch (51-by-51-by-3-mm) structural-steel angles or 1-inch (25-mm) diameter, cold-formed structural tubing to stiffen primary frame flanges.

5. Sag Bracing: Minimum 1-by-1-by-1/8-inch (25-by-25-by-3-mm) structural-steel angles.

6. Base or Sill Angles: Minimum 6-by-3-by-0.0598-inch zinc-coated (galvanized) steel sheet.

7. Purlin and Girt Clips: Minimum 0.0598-inch- (1.5-mm-) thick, steel sheet. Provide galvanized clips where clips are connected to galvanized framing members.

8. Framing for Openings: Channel shapes; fabricated from minimum 0.0598-inch- (1.5-mm-) thick, cold-formed, structural-steel sheet or structural-steel shapes. Frame head and jamb of door openings, and head, jamb, and sill of other openings. Frame rollup doors with hot-rolled structural steel channels.

9. Miscellaneous Structural Members: Manufacturer's standard sections fabricated from cold-formed, structural-steel sheet; built-up steel plates; or zinc-coated (galvanized) steel sheet; designed to withstand required loads.

D. Bracing: Provide adjustable wind bracing as follows:

1. Rods: ASTM A 36/A 36M; ASTM A 572/A 572M, Grade 50 (345); or ASTM A 529/A 529M, Grade 50 (345); minimum 1/2-inch- (13-mm-) diameter steel; threaded full length or threaded a minimum of 6 inches (152 mm) at each end.

2. Cable: ASTM A 475, 1/4-inch- (6-mm-) diameter, extra-high-strength grade, Class B zinc-coated, 7-strand steel; with threaded end anchors.

3. Angles: Fabricated from structural-steel shapes to match primary framing, of size required to withstand design loads.

4. Rigid Portal Frames: Fabricate from shop-welded, built-up steel plates or structural-steel shapes to match primary framing; of size required to withstand design loads.

5. Fixed-Base Columns: Fabricate from shop-welded, built-up steel plates or structural-steel shapes to match primary framing; of size required to withstand design loads.

6. Diaphragm Action of Metal Panels: Design metal building to resist wind forces through diaphragm action of metal panels.

7. Bracing: Provide wind bracing using any method specified above, at manufacturer's option.

E. Bolts: Provide plain finish bolts for structural-framing components that are primed or finish painted. Provide hot-dipped galvanized bolts for structural-framing components that are galvanized.

F. Factory-Primed Finish: Apply specified primer immediately after cleaning and pretreating.

1. Prime primary, secondary, and end-wall structural-framing members to a minimum dry film thickness of 1 mil (0.025 mm).

a. Prime secondary steel framing formed from uncoated steel sheet to a minimum dry film thickness of 0.5 mil (0.013 mm) on each side.

2. Prime galvanized members with specified primer, after phosphoric acid pretreatment.

2.07 METAL ROOF PANELS

A. Vertical-Rib, Standing-Seam Metal Roof Panels: Formed with vertical ribs at panel edges and intermediate stiffening ribs symmetrically spaced between ribs; designed for sequential installation by mechanically attaching panels to supports using concealed clips located under one side of panels and engaging opposite edge of adjacent panels.

1. Material: Zinc-coated (galvanized) steel sheet, 0.0209 inch (0.55 mm) thick.

a. Exterior Finish: Fluoropolymer.

b. Color: As selected by Architect from manufacturer's full range.

2. Clips: Manufacturer's standard, floating type to accommodate thermal movement; fabricated from zinc-coated (galvanized) steel sheet.

3. Joint Type: Panels snapped together.

4. Joint Type: Mechanically seamed, folded as standard with manufacturer.

5. Panel Coverage: 16 inches (406 mm).

6. Panel Height: 2 inches (51 mm).

7. Uplift Rating: UL 90.

2.08 METAL SOFFIT PANELS

A. General: Provide factory-formed metal soffit panels designed to be field assembled by lapping and interconnecting side edges of adjacent panels and mechanically attaching through panel to supports using concealed fasteners and factory-applied sealant in side laps. Include accessories required for weathertight installation.

B. Metal Soffit Panels: Match profile and material of metal wall panels.

1. Finish: Match finish and color of metal wall panels.

C. Concealed-Fastener Metal Soffit Panels: Formed with vertical panel edges and flush surface; with flush joint between panels; with 1-inch- (25-mm-) wide flange for attaching interior finish; designed to be field assembled by lapping and interconnecting side edges of adjacent panels and mechanically attaching through panel to supports using concealed fasteners and factory-applied sealant in side laps.

1. Material: Zinc-coated (galvanized) steel sheet, 0.0209 inch (0.55 mm) thick.

a. Exterior Finish: Fluoropolymer.

b. Color: As selected by Architect from manufacturer's full range.

2. Panel Coverage: 12 inches (305 mm).

3. Panel Height: 1 inch (25 mm).

2.09 ACCESSORIES

A. General: Provide accessories as standard with metal building system manufacturer and as specified. Fabricate and finish accessories at the factory to greatest extent possible, by manufacturer's standard procedures and processes. Comply with indicated profiles and with dimensional and structural requirements.

1. Form exposed sheet metal accessories that are without excessive oil canning, buckling, and tool marks and that are true to line and levels indicated, with exposed edges folded back to form hems.

B. Roof Panel Accessories: Provide components required for a complete metal roof panel assembly including copings, fasciae, corner units, ridge closures, clips, sealants, gaskets, fillers, closure strips, and similar items. Match material and finish of metal roof panels, unless otherwise indicated.

1. Closures: Provide closures at eaves and ridges, fabricated of same material as metal roof panels.

2. Clips: Manufacturer's standard, formed from steel sheet, designed to withstand negative-load requirements.

3. Cleats: Manufacturer's standard, mechanically seamed cleats formed from steel sheet.

4. Backing Plates: Provide metal backing plates at panel end splices, fabricated from material recommended by manufacturer.

5. Closure Strips: Closed-cell, expanded, cellular, rubber or crosslinked, polyolefin-foam or closed-cell laminated polyethylene; minimum 1-inch-(25-mm-) thick, flexible closure strips; cut or premolded to match metal roof panel profile. Provide closure strips where indicated or necessary to ensure weathertight construction.

6. Thermal Spacer Blocks: Where metal panels attach directly to purlins, provide thermal spacer blocks of thickness required to provide 1 inch (25 mm) standoff; fabricated from extruded polystyrene.

C. Flashing and Trim: Formed from minimum 0.0159-inch- (0.40-mm-) thick, metallic-coated steel sheet or aluminum-zinc alloy-coated steel sheet prepainted with coil coating; finished to match adjacent metal panels.

1. Provide flashing and trim as required to seal against weather and to provide finished appearance. Locations include, but are not limited to, eaves, rakes, corners, bases, framed openings, ridges, fasciae, and fillers.

2. Opening Trim: Minimum 0.0159-inch- (0.40-mm-) thick, metallic-coated steel sheet or aluminum-zinc alloy-coated steel sheet prepainted with coil coating. Trim head and jamb of door openings, and head, jamb, and sill of other openings.

D. Gutters: Formed from minimum 0.0159-inch- (0.40-mm-) thick, metallic-coated steel sheet or aluminum-zinc alloy-coated steel sheet prepainted with coil coating; finished to match roof fascia and rake trim. Match profile of gable trim, complete with end pieces, outlet tubes, and other special pieces as required. Fabricate in

minimum 96-inch- (2438-mm-) long sections, sized according to SMACNA's "Architectural Sheet Metal Manual."

1. Gutter Supports: Fabricated from same material and finish as gutters; spaced 36 inches (900 mm) o.c.

2. Strainers: Bronze, copper, or aluminum wire ball type at outlets.

E. Downspouts: Formed from 0.0159-inch- (0.4-mm-) thick, zinc-coated (galvanized) steel sheet or aluminum-zinc alloy-coated steel sheet prepainted with coil coating; finished to match metal wall panels. Fabricate in minimum 10-foot- (3-m-) long sections, complete with formed elbows and offsets.

1. Mounting Straps: Fabricated from same material and finish as gutters; spaced 10 feet (3 m) o.c.

F. Roof Curbs: Fabricated from minimum 0.0428-inch- (1.1-mm-) thick, metallic-coated steel sheet or aluminum-zinc alloy-coated steel sheet prepainted with coil coating; finished to match metal roof panels; with welded top box and bottom skirt, and integral full-length cricket; capable of withstanding indicated loads and of size and height indicated.

1. Curb Subframing: Minimum 0.0528-inch- (1.35-mm-) thick, angle-, C-, or Z-shaped steel sheet.

2. Insulation: 1-inch- (25-mm-) thick, rigid type.

2.10 FINISHES, GENERAL

A. Comply with NAAMM's "Metal Finishes Manual for Architectural and Metal Products" for recommendations for applying and designating finishes.

B. Appearance of Finished Work: Variations in appearance of abutting or adjacent pieces are acceptable if they are within one-half of the range of approved Samples. Noticeable variations in the same piece are not acceptable. Variations in appearance of other components are acceptable if they are within the range of approved Samples and are assembled or installed to minimize contrast.

2.11 SOURCE QUALITY CONTROL

A. Testing Agency: Owner will engage a qualified testing and inspecting agency to perform the following tests and inspections and to submit reports.

B. Special Inspector: Owner will engage a qualified special inspector to perform the following tests and inspections and to submit reports. Special Inspector will verify that manufacturer maintains detailed fabrication and quality-control procedures and will review the completeness and adequacy of those procedures to perform the Work.

1. Special inspections will not be required if fabrication is performed by a manufacturer registered and approved by authorities having jurisdiction to perform such Work without special inspection.

    a. After fabrication, submit certificate of compliance with copy to authorities having jurisdiction certifying that Work was performed according to Contract requirements.

C. Tests and Inspections:

1. Bolted Connections: Shop-bolted connections shall be inspected according to RCSC's "Specification for Structural Joints Using ASTM A 325 or A 490 Bolts."

2. Welded Connections: In addition to visual inspection, shop-welded connections shall be tested and inspected according to AWS D1.1 and the following inspection procedures, at inspector's option:

    a. Liquid Penetrant Inspection: ASTM E 165.

    b. Magnetic Particle Inspection: ASTM E 709; performed on root pass and on finished weld. Cracks or zones of incomplete fusion or penetration will not be accepted.

    c. Ultrasonic Inspection: ASTM E 164.

    d. Radiographic Inspection: ASTM E 94.

D. Correct deficiencies in Work that test reports and inspections indicate do not comply with the Contract Documents.

PART 3: EXECUTION

3.01 EXAMINATION

A. Examine substrates, areas, and conditions, with Erector present, for compliance with requirements for installation tolerances and other conditions affecting performance of work.

1. For the record, prepare written report, endorsed by Erector, listing conditions detrimental to performance of work.

B. Before erection proceeds, survey elevations and locations of concrete- and masonry-bearing surfaces and locations of anchor rods, bearing plates, and other embedments to receive structural framing, with Erector present, for compliance with requirements and metal building system manufacturer's tolerances.

1. Engage land surveyor to perform surveying.

C. Proceed with erection only after unsatisfactory conditions have been corrected.

3.02 PREPARATION

A. Clean and prepare surfaces to be painted according to manufacturer's written instructions for each particular substrate condition.

B. Provide temporary shores, guys, braces, and other supports during erection to keep structural framing secure, plumb, and in alignment against temporary construction loads and loads equal in intensity to design loads. Remove temporary supports when permanent structural framing, connections, and bracing are in place, unless otherwise indicated.

3.03 ERECTION OF STRUCTURAL FRAMING

A. Erect metal Inspection Platform according to manufacturer's written erection instructions and erection drawings.

B. Do not field cut, drill, or alter structural members without written approval from metal building system manufacturer's professional engineer.

C. Set structural framing accurately in locations and to elevations indicated and according to AISC specifications referenced in this Section. Maintain structural stability of frame during erection.

D. Base Plates: Clean concrete- and masonry-bearing surfaces of bond-reducing materials, and roughen surfaces prior to setting plates. Clean bottom surface of plates.

1. Set plates for structural members on wedges, shims, or setting nuts as required.

2. Tighten anchor rods after supported members have been positioned and plumbed. Do not remove wedges or shims but, if protruding, cut off flush with edge of plate before packing with grout.

3. Promptly pack grout solidly between bearing surfaces and plates so no voids remain. Neatly finish exposed surfaces; protect grout and allow to cure. Comply with manufacturer's written installation instructions for shrinkage-resistant grouts.

E. Align and adjust structural framing before permanently fastening. Before assembly, clean bearing surfaces and other surfaces that will be in permanent contact with framing. Perform necessary adjustments to compensate for discrepancies in elevations and alignment.

1. Level and plumb individual members of structure.

2. Make allowances for difference between temperature at time of erection and mean temperature when structure will be completed and in service.

F. Primary Framing: Erect framing true to line, level, plumb, rigid, and secure. Level baseplates to a true even plane with full bearing to supporting structures, set with double-nutted anchor bolts. Use grout to obtain uniform bearing and to maintain a level base-line elevation. Moist cure grout for not less than seven days after placement.

1. Make field connections using high-strength bolts installed according to RCSC's "Specification for Structural Joints Using ASTM A 325 or A 490 Bolts" for type of bolt and type of joint specified.

a. Joint Type: Snug tightened or pretensioned.

G. Secondary Framing: Erect framing true to line, level, plumb, rigid, and secure. Fasten secondary framing to primary framing using clips with field connections using non-high-strength bolts.

1. Provide rake or gable purlins with tight-fitting closure channels and fasciae.

2. Locate canopy framing as indicated.

3. Provide supplemental framing at entire perimeter of openings, including penetrations of roof.

H. Bracing: Install bracing in roof where indicated on erection drawings.

1. Tighten rod and cable bracing to avoid sag.

2. Locate interior end-bay bracing only where indicated.

I. Framing for Openings: Provide shapes of proper design and size to reinforce openings and to carry loads and vibrations imposed, including equipment furnished under mechanical and electrical work. Securely attach to structural framing.

J. Erection Tolerances: Maintain erection tolerances of structural framing within AISC's "Code of Standard Practice for Steel Buildings and Bridges."

3.04 METAL PANEL INSTALLATION, GENERAL

A. Examination: Examine primary and secondary framing to verify that structural panel support members and anchorages have been installed within alignment tolerances required by manufacturer.

1. Examine roughing-in for components and systems penetrating metal panels to verify actual locations of penetrations relative to seam locations of metal panels before metal panel installation.

B. General: Anchor metal panels and other components of the Work securely in place, with provisions for thermal and structural movement.

1. Field cut metal panels as required for openings. Cut openings as small as possible, neatly to size required, and without damage to adjacent metal panel finishes.

a. Field cutting of metal panels by torch is not permitted unless approved in writing by manufacturer.

2. Install metal panels perpendicular to structural supports, unless otherwise indicated.

3. Flash and seal metal panels with weather closures at perimeter of openings and similar elements. Fasten with self-tapping screws.

4. Locate and space fastenings in uniform vertical and horizontal alignment.

5. Locate metal panel splices over, but not attached to, structural supports with end laps in alignment. Stagger panel splices and end laps to avoid a four-panel lap splice condition.

6. Lap metal flashing over metal panels to allow moisture to run over and off the material.

C. Lap-Seam Metal Panels: Install screw fasteners with power tools having controlled torque adjusted to compress neoprene washer tightly without damage to washer, screw threads, or metal panels. Install screws in predrilled holes.

1. Arrange and nest side-lap joints so prevailing winds blow over, not into, lapped joints. Lap ribbed or fluted sheets one full rib corrugation. Apply metal panels and associated items for neat and weathertight enclosure. Avoid "panel creep" or application not true to line.

D. Metal Protection: Where dissimilar metals will contact each other or corrosive substrates, protect against galvanic action by painting contact surfaces with bituminous coating, by applying rubberized-asphalt underlayment to each contact surface, or by other permanent separation as recommended by metal roof panel manufacturer.

E. Joint Sealers: Install gaskets, joint fillers, and sealants where indicated and where required for weatherproof performance of metal panel assemblies. Provide types of gaskets, fillers, and sealants indicated or, if not indicated, types recommended by metal panel manufacturer.

1. Seal metal panel end laps with double beads of tape or sealant, full width of panel. Seal side joints where recommended by metal panel manufacturer.

2. Prepare joints and apply sealants to comply with requirements in Division 7 Section "Joint Sealants."

3.05 METAL ROOF PANEL INSTALLATION

A. General: Provide metal roof panels of full length from eave to ridge, unless otherwise indicated or restricted by shipping limitations.

1. Install ridge caps as metal roof panel work proceeds.

2. Flash and seal metal roof panels with weather closures at eaves and rakes. Fasten with self-tapping screws.

B. Field-Assembled, Standing-Seam Metal Roof Panels: Fasten metal roof panels to supports with concealed clips at each standing-seam joint at location, spacing, and with fasteners recommended by manufacturer.

1. Install clips to supports with self-tapping fasteners.

2. Install pressure plates at locations indicated in manufacturer's written installation instructions.

3. Snap Joint: Nest standing seams and fasten together by interlocking and completely engaging factory-applied sealant.

4. Seamed Joint: Crimp standing seams with manufacturer-approved motorized seamer tool so clip, metal roof panel, and factory-applied sealant are completely engaged.

5. Rigidly fasten eave end of metal roof panels and allow ridge end free movement due to thermal expansion and contraction. Predrill panels for fasteners.

6. Provide metal closures at peaks, rake edges, rake walls and each side of ridge caps.

C. Field-Assembled, Lap-Seam Metal Roof Panels: Fasten metal roof panels to supports with exposed fasteners at each lapped joint at location and spacing recommended by manufacturer.

1. Provide metal-backed washers under heads of exposed fasteners bearing on weather side of metal roof panels.

2. Provide sealant tape at lapped joints of metal roof panels and between panels and protruding equipment, vents, and accessories.

3. Apply a continuous ribbon of sealant tape to weather-side surface of fastenings on end laps and on side laps of nesting-type metal panels; on side laps of ribbed or fluted metal panels; and elsewhere as needed to make metal panels weatherproof to driving rains.

4. At metal panel splices, nest panels with minimum 6-inch (152-mm) end lap, sealed with butyl-rubber sealant and fastened together by interlocking clamping plates.

D. Metal Fascia Panels: Align bottom of metal panels and fasten with blind rivets, bolts, or self-tapping screws. Flash and seal metal panels with weather closures where fasciae meet soffits, along lower panel edges, and at perimeter of all openings.

E. Metal Roof Panel Installation Tolerances: Shim and align metal roof panels within installed tolerance of 1/4 inch in 20 feet (6 mm in 6 m) on slope and location lines as indicated and within 1/8-inch (3-mm) offset of adjoining faces and of alignment of matching profiles.

3.06 METAL SOFFIT PANEL INSTALLATION

A. Provide metal soffit panels full width of soffits. Install panels perpendicular to support framing.

B. Flash and seal metal soffit panels with weather closures where panels meet walls and at perimeter of all openings.

3.07 THIS SECTION HAS BEEN DELETED

3.08 ACCESSORY INSTALLATION

A. General: Install accessories with positive anchorage to building and weathertight mounting, and provide for thermal expansion. Coordinate installation with flashings and other components.

1. Install components required for a complete metal roof panel assembly including trim, copings, ridge closures, seam covers, flashings, sealants, gaskets, fillers, closure strips, and similar items.

2. Where dissimilar metals will contact each other or corrosive substrates, protect against galvanic action by painting contact surfaces with bituminous coating, by applying rubberized-asphalt underlayment to each contact surface, or by other permanent separation as recommended by manufacturer.

B. Flashing and Trim: Comply with performance requirements, manufacturer's written installation instructions, and SMACNA's "Architectural Sheet Metal Manual." Provide concealed fasteners where possible, and set units true to line and level as indicated. Install work with laps, joints, and seams that will be permanently watertight and weather resistant.

1. Install exposed flashing and trim that is without excessive oil canning, buckling, and tool marks and that is true to line and levels indicated, with exposed edges folded back to form hems. Install sheet metal flashing and trim to fit substrates and to result in waterproof and weather-resistant performance.

2. Expansion Provisions: Provide for thermal expansion of exposed flashing and trim. Space movement joints at a maximum of 10 feet (3 m) with no joints allowed within 24 inches (600 mm) of corner or intersection. Where lapped or bayonet-type expansion provisions cannot be used or would not be sufficiently weather resistant and waterproof, form expansion joints of intermeshing hooked flanges, not less than 1 inch (25 mm) deep, filled with mastic sealant (concealed within joints).

C. Gutters: Join sections with riveted and soldered or lapped and sealed joints. Attach gutters to eave with gutter hangers spaced not more than 4 feet (1.2 m) o.c. using manufacturer's standard fasteners. Provide end closures and seal watertight with sealant. Provide for thermal expansion.

D. Downspouts: Join sections with 1-1/2-inch (38-mm) telescoping joints. Provide fasteners designed to hold downspouts securely 1 inch (25 mm) away from walls; locate fasteners at top and bottom and at approximately 60 inches (1500 mm) o.c. in between.

1. Provide elbows at base of downspouts to direct water away from building.

2. Tie downspouts to underground drainage system indicated.

E. THIS SECTION HAS BEEN DELETED.

F. THIS SECTION HAS BEEN DELETED.

G. Coordinate placement of metalwork with the work of other trades.

H. Provide anchors and inserts in sufficient numbers for proper fastening of metal items.

I. Provide bar anchors with turned ends extending six inches minimum into concrete and 12 inches minimum into masonry. Lay anchors flat in masonry joints.

J. Embed anchors accurately in concrete to permit aligning metalwork in proper position.

K. Set metalwork accurately, level, plumb and in true alignment with related work.

L. Where pipe railing is mounted on concrete, attach by means of bolts and expansion shields. If concrete surface upon which posts are to be set is low, use full-size steel shims to bring railing to correct elevation.

M. Space handrail brackets not more than four feet on centers and attach flanges to wall surfaces with 3/8-inch bolts and expansion shields, powder actuated fasteners or toggle bolts, as appropriate.

N. Drill holes in supports and in metal work for bolts and screws as necessary. Conceal fasteners where possible.

O. For fabricated items, use fastenings and anchors of size and type shown on approved shop drawings or manufacturer's standard drawings.

P. Powder actuated fasteners may be used for installing miscellaneous metal products.

Q. Set products true to line and without sharp bends, twists or kinks.

R. Provide lead caulking as necessary to set, seal and secure metal items.

S. Use bolts, screws or locking lugs to secure safety walk gratings; do not weld.

3.09 PAINTING AND REPAIRING COATED SURFACES:

A. Before erection or enclosing construction, paint items that support masonry or will be concealed in finished work, except items encased in concrete.

B. Where shop coat is abraded or burned by welding, clean and touch up.

C. Touch up primed surfaces with same material as coating.

D. Where aluminum parts come into contact with concrete or steel, coat contact surfaces of aluminum with bituminous coating.

E. Coat field welds and repair damage to zinc-coated surfaces as follows:

1. Wire brush areas to be coated to bright metal.

2. Apply galvanizing repair compound at rate of two ounces per square foot.

3.10 FIELD QUALITY CONTROL

A. Testing Agency: Owner will engage a qualified testing and inspecting agency to perform the following tests and inspections and to submit reports.

B. Special Inspector: Owner will engage a qualified special inspector to perform the following tests and inspections and to submit reports.

C. Tests and Inspections:

1. High-Strength, Field-Bolted Connections: Connections shall be inspected during installation according to RCSC's "Specification for Structural Joints Using ASTM A 325 or A 490 Bolts."

2. Welded Connections: In addition to visual inspection, field-welded connections shall be tested and inspected according to AWS D1.1 and the following inspection procedures, at inspector's option:

a. Liquid Penetrant Inspection: ASTM E 165.

b. Magnetic Particle Inspection: ASTM E 709; performed on root pass and on finished weld. Cracks or zones of incomplete fusion or penetration will not be accepted.

c. Ultrasonic Inspection: ASTM E 164.

d. Radiographic Inspection: ASTM E 94.

D. Correct deficiencies in Work that test reports and inspections indicate do not comply with the Contract Documents.

3.11 THIS SECTION HAS BEEN DELETED

3.12 CLEANING AND PROTECTION

A. Repair damaged galvanized coatings on galvanized items with galvanized repair paint according to ASTM A 780 and manufacturer's written instructions.

B. Remove and replace glass that has been broken, chipped, cracked, abraded, or damaged during construction period.

C. Touchup Painting: After erection, promptly clean, prepare, and prime or reprime field connections, rust spots, and abraded surfaces of prime-painted structural framing, bearing plates, and accessories.

1. Clean and prepare surfaces by SSPC-SP 2, "Hand Tool Cleaning," or SSPC-SP 3, "Power Tool Cleaning."

2. Apply a compatible primer of same type as shop primer used on adjacent surfaces.

D. Touchup Painting: Cleaning and touchup painting are specified in Division 9 painting Sections.

E. Metal Panels: Remove temporary protective coverings and strippable films, if any, as metal panels are installed. On completion of metal panel installation, clean finished surfaces as recommended by metal panel manufacturer. Maintain in a clean condition during construction.

1. Replace metal panels that have been damaged or have deteriorated beyond successful repair by finish touchup or similar minor repair procedures.

3.13 DEMONSTRATION

A. Engage a factory-authorized service representative to train Owner's maintenance personnel to adjust, operate, and maintain operable accessories. Refer to Division 1 Section "Closeout Procedures, Demonstration and Training."

PART 4: MEASUREMENT AND PAYMENT

4.01 METAL INSPECTION PLATFORM:

A. Metal Inspection Platform will not be measured for payment.

B. The Inspection Platform will be paid for at the Lump Sum price bid, which shall be full compensation for all labor, materials (including structural steel, stairs, roof, plates and shapes, steel grating, anchor bolts and hardware, and other items for completion), equipment, and incidentals necessary to complete the item as specified.

END OF SECTION

SECTION 16116

UNDERGROUND CONDUITS

PART 1 - GENERAL

1.01 DESCRIPTION:

A. This Work includes providing conduits as shown on the Drawings and as specified herein. Each conduit consists of ducts, fittings, and concrete. Conduit construction includes excavation, installation and backfill.

B. Ducts emerging from conduits and direct-buried shall comply with the requirements of Section 16111.

C. Underground conduits include the following as shown on the Contract Drawings:

1. 3” schedule 80 concrete encased conduit
2. 4-4” schedule 80 concrete encased conduit
3. 10-4” schedule 80 concrete encased conduit
4. Schedule 80 direct buried conduit
5. Standby Power Conduit No 1
6. Standby Power Conduit No 2
7. Standby Power Conduit No 3
8. Standby Power Conduit No 4
9. 4-5” Fiberglass Conduits

1.02 RELATED SECTIONS:

A. Section 01300 – Submittals

B. Section 01450 – Quality Assurance and Quality Control

C. Section 02315 – Excavation and Backfill

D. Section 03210 – Concrete Reinforcement

E. Section 03300 – Cast-in-Place Concrete

F. Section 16010 – General Electrical Requirements

G. Section 16111 – Ducts and Raceways

1.03 SUBMITTALS:

A. Submittals shall be made in accordance with the requirements of Section 01300.

1.04 QUALITY ASSURANCE/QUALITY CONTROL:

A. Quality Assurance/Quality Control shall be carried out in accordance with the requirements of Section 01450.

1.05 AS-BUILT DRAWINGS:

A. As-built drawings shall be provided in accordance with the requirements of Section 01300, except as modified herein.

B. As-built drawings shall show the location of all underground conduits and the number and size of ducts therein.

C. Section drawings shall show the configuration of ducts in the conduit throughout its length.

D. Tabulations shall show the number of spare ducts available at the time of project completion.

PART 2 - PRODUCTS

2.01 DUCTS:

A. Ducts, fittings, and labels shall comply with Section 16111.

B. Duct spacers shall be plastic, lock together, and sized to create clear spaces between ducts as indicated on the contract drawings. Acceptable manufacturers: Carlon, PW Pipe, or equal.

2.02 WARNING TAPE:

A. Tape shall be heavy-gauge, yellow, plastic, for direct burial, 6-inch minimum width for use in trenches containing electric circuits. Tape shall be made of material resistant to corrosive soil. Tape shall have printed warning that an electric circuit is located below the tape. Approved manufacturers and types: ITT Blackburn Type YT, Griffolyn Co., Terra-Tape, or equal.

2.03 ENCASEMENT:

A. Concrete encasement shall be in accordance with Section 03300 and Section 03210, except concrete shall have a 2,500 psi minimum, 28-day strength. Slump shall be 7-inch with a 1-inch tolerance. All concrete encasement, which is above grade, shall have a 4,000 psi minimum 28-day strength. All buried concrete encasement, which crosses track(s), shall have a 4,000 psi minimum 28-day strength, on a length of 15-feet on each side of the crossing.

2.04 RED CONCRETE:

A. Red-colored concrete shall be made by mixing-in iron oxide in a ratio of 100 pounds per 8 cubic yards of concrete.

B. Red-colored concrete shall be used to encase all high voltage and electric traction (ET) conduits underground.

2.05 FIBERGLASS CONDUIT:

A. Fiberglass Conduit:

1. Reinforced epoxy (FRE) conduit shall be composed of glass filaments encapsulated in an epoxy matrix. Each conduit length shall have an integral wound-in expanded coupling. Sizes 2-inches through 6-inches shall incorporate an integral urethane gasket for sealing. No threads or adhesives shall be required to assembly the joints for inground installations. Watertight joints shall be assembled as specified herein under Part 3 "Installation" of Section 16300 of these specifications. All conduit and fittings shall be pigmented with carbon black dispersed homogeneously throughout the epoxy glass matrix for U.V. protection.

2. Conduit and fittings shall be filament wound.

3. Conduit shall be suitable for continuous operation from -40 degrees C to + 110 degrees C without significant change of mechanical properties.

4. Conduit combustion by-products shall not contain chlorine gas in excess of trace levels and always less than safe OSHA limits.

5. Conductors shall not adhere to conduit or fitting in fault conditions.

6. Conduit and fittings in the 2-inches through 6-inches sizes inclusive shall have inside diameters equal to the trade size.

7. Conduit and fittings shall bear nationally accepted testing laboratory approval from U.L.

8. Conduit and fitting shall be suitable for use in direct burial, concrete encasement and underwater when joints are properly treated. When waterproofed, the conduit and joints shall not fail when subjected to water pressures at depths of one hundred feet.

9. Contractor shall submit certifications of compliance to these specifications and a sample of the conduit to be installed.

B. Acceptable Manufacturers:

1. FRE Conduit Inc.

2. Fiberglass Pipe and Conduit Company (FIPCO).

3. Cila-Geigy Corporation.

4. Or Equal.

PART 3 - EXECUTION

3.01 GENERAL:

A. Where required to support trench, construct formwork in accordance with Section 03300.

B. Coordinate installation of underground conduits with other construction work. Maintain any existing utilities in operation unless otherwise directed by the Project Manager.

C. Concrete encasement shall be limited to the neat lines shown on the Contract Drawings. The Contractor shall be responsible for coordinating placement of the concrete with other work. If the conduit conflicts with other work it shall be relocated by Contractor.

D. Protect and maintain all new or existing benchmarks or other reference points necessary for the completion of the work.

E. Red-colored concrete shall be used for all high voltage conduits buried underground.

F. All ducts shall have a nylon pull-cord installed and secured at each end. Identify each duct at each end with brass tags inscribed or stamped with

the circuit number shown on the Drawings. Attach the tag with a sunlight resistant nylon tie.

3.02 TRENCH EXCAVATION AND BACKFILL:

A. Follow the requirements of Section 02315 except blasting will not be permitted. Provide a minimum cover of 36 inches over all underground ductbank unless otherwise indicated.

B. When trench walls are stable, use the walls of the trench as forms for concrete encasement. The trench shall be made no wider than necessary to provide the nominal concrete encased ductbank.

C. Excavations shall be dewatered in accordance with Section 02315 and the excavation cleaned prior to duct and concrete placement.

D. Provide a compacted base per Section 02315 under the conduit.

E. Install yellow warning tape 6 to 12 inches above conduit.

3.03 DUCT PLACEMENT:

A. Raceways shall be arranged as shown on the Contract Drawings.

B. Slope all ducts for drainage to manholes or handholes away from buildings. Minimum slope is 1 inch per 100 feet.

C. Duct spacers shall be placed at maximum five-foot intervals (unless longer intervals are allowed by code).

D. Bending radii indicated on Drawings and specified herein are to be considered minimum, unless noted otherwise.

E. Secure ducts to prevent displacement during concrete encasement or earth backfilling. Make minor changes in location or cross-section as necessary to avoid obstructions or conflicts. Where duct runs cannot be installed as shown because of conditions not discoverable prior to trenching, refer the condition to the Designer for direction before further work is done.

F. When placing concrete around the ducts, adjust the delivery chute so the fall distance of the concrete into the trench is minimal. Concrete direct fall distance shall be 3 feet or less. Do not move concrete more than 5 feet horizontally from point of discharge. Use a splash board to divert the flow of concrete away from the trench sides and avoid dislodging soil and stones. Concrete shall be incorporated in accordance with Section 03300.

G. All plastic ducts may expand or contract as concrete is placed and cured. Therefore, when placing concrete encasement, always encase from one

end of the duct section toward the other end to allow the free end to move. Never encase from each end of the section toward the center.

H. Place concrete continuously between manholes, handholes and pullboxes. If the placement stops for more than 2 hours, 8 foot lengths of No. 4 reinforcement steel shall be placed longitudinally around the perimeter of the concrete envelope on 12-inch centers and with 2 inches minimum cover. Half of each 8 foot length shall be in each pour.

I. Mandrel ducts and provide seals in accordance with Section 16111. Ducts shall be mandrelled after concrete encasement but before backfilling.

3.04 INSPECTION:

A. The Contractor's QC Inspector in accordance with the Contractor's QC procedures shall inspect conduits.

PART 4 - MEASUREMENT AND PAYMENT

4.01 3" SCHEDULE 80 CONCRETE ENCASED CONDUIT-TRENCHED:

A. 3" schedule 80 Concrete Encased Conduit-Trenched will be measured per linear foot.

B. 3" Schedule 80 Concrete Encased Conduit-Trenched will be paid for at the Contract unit price bid. This price shall be full compensation for all materials, including concrete encasement, labor, equipment, and all work incidentals necessary to complete the item as specified.

4.02 4-4" SCHEDULE 80 CONCRETE ENCASED CONDUIT-TRENCHED:

A. 4-4" Schedule 80 Concrete Encased Conduit-Trenched will be measured per linear foot.

B. 4-4" Schedule 80 Concrete Encased Conduit-Trenched will be paid for at the Contract unit price bid. This price shall be full compensation for all materials, including concrete encasement, labor, equipment, and all work incidentals necessary to complete the item as specified.

4.03 STANDBY POWER NO 1 CONCRETE ENCASED CONDUIT-TRENCHED:

A. Standby Power No 1 Concrete Encased Conduit-Trenched will be measured per linear foot.

B. Standby Power No 1 Concrete Encased Conduit-Trenched will be paid for at the Contract unit price bid. This price shall be full compensation for all

materials, including concrete encasement, labor, equipment, and all work incidentals necessary to complete the item as specified.

4.04 STANDBY POWER NO 2 CONCRETE ENCASED CONDUIT-TRENCHED:

A. Standby Power No 2 Concrete Encased Conduit-Trenched will be measured per linear foot.

B. Standby Power No 2 Concrete Encased Conduit-Trenched will be paid for at the Contract unit price bid. This price shall be full compensation for all materials, including concrete encasement, labor, equipment, and all work incidentals necessary to complete the item as specified.

4.05 STANDBY POWER NO 3 CONCRETE ENCASED CONDUIT-TRENCHED:

A. Standby Power No 3 Concrete Encased Conduit-Trenched will be measured per linear foot.

B. Standby Power No 3 Concrete Encased Conduit-Trenched will be paid for at the Contract unit price bid. This price shall be full compensation for all materials, including concrete encasement, labor, equipment, and all work incidentals necessary to complete the item as specified.

4.06 STANDBY POWER NO 4 CONCRETE ENCASED CONDUIT-TRENCHED:

A. Standby Power No 4 Concrete Encased Conduit-Trenched will be measured per linear foot.

B. Standby Power No 4 Concrete Encased Conduit-Trenched will be paid for at the Contract unit price bid. This price shall be full compensation for all materials, including concrete encasement, labor, equipment, and all work incidentals necessary to complete the item as specified.

4.07 CONDUIT PVC 80 1” DIA.:

A. Conduit PVC 80 1” Dia. will be measured per linear foot.

B. Conduit PVC 80 1” Dia. will be paid for at the Contract unit price bid. This price shall be full compensation for all materials, labor, equipment, and all work incidentals necessary to complete the item as specified.

4.08 CONDUIT PVC 80 2” DIA.:

A. Conduit PVC 80 2” Dia. will be measured per linear foot.

B. Conduit PVC 80 2” Dia. will be paid for at the Contract unit price bid. This price shall be full compensation for all materials, labor, equipment, and all work incidentals necessary to complete the item as specified.

4.09 CONDUIT PVC 80 4” DIA.:

A. Conduit PVC 80 4” Dia. will be measured per linear foot.

B. Conduit PVC 80 4” Dia. will be paid for at the Contract unit price bid. This price shall be full compensation for all materials, labor, equipment, and all work incidentals necessary to complete the item as specified.

4.10 4-5” FIBERGLASS CONCRETE ENCASED CONDUIT-TRENCHED.:

A. 4-5” Fiberglass Concrete Encased Conduit-Trenched. will be measured per linear foot.

B. 4-5” Fiberglass Concrete Encased Conduit-Trenched. will be paid for at the Contract unit price bid. This price shall be full compensation for all materials, labor, equipment, and all work incidentals necessary to complete the item as specified.

4.11 2-5” SCHEDULE 40 PVC CONCRETE ENCASED CONDUIT-TRENCHED.:

A. 2-5” Schedule 40 PVC Concrete Encased Conduit-Trenched will be measured per linear foot.

B. 2-5” Schedule 40 PVC Concrete Encased Conduit-Trenched. will be paid for at the Contract unit price bid. This price shall be full compensation for all materials, labor, equipment, and all work incidentals necessary to complete the item as specified.

4.12 4-5” SCHEDULE 40 PVC CONCRETE ENCASED CONDUIT-TRENCHED.:

A. 4-5”” Schedule 40 PVC Concrete Encased Conduit-Trenched will be measured per linear foot.

B. 4-5”” Schedule 40 PVC Concrete Encased Conduit-Trenched. will be paid for at the Contract unit price bid. This price shall be full compensation for all materials, labor, equipment, and all work incidentals necessary to complete the item as specified.

END OF SECTION

SECTION 16340

MEDIUM-VOLTAGE SWITCHING AND PROTECTION ASSEMBLIES

PART 1: GENERAL

1.01 SUMMARY

A. Section Includes: The work specified in this Section consists of services and work requirements for Medium Voltage Switching and Protection Assemblies.

B. Related Sections**:**

1. Section 01300 – Submittals.

2. Section 16275 - Substation Transformer.

1.02 SUBMITTALS

A. General: Include shop drawings, manufacturer's descriptive literature and published details with performance/capacity rating schedules or charts as applicable, and where required by the cited reference standards.

B. Shop Drawings: All mechanical and electrical components specified herein must be included to be considered a complete shop drawing.

1. Product Data: For each mechanical and electrical component include manufacturer's descriptive literature; product specifications; published details; technical bulletins; performance and capacity rating curves, charts, and schedules; catalogue data sheets, and other submittal materials as required to verify that the proposed products conform to the quality and functionability of the specified products.

a. Identification - Clearly indicate by an arrow on submissions, covering more than one product or style, exactly which product is being submitted for approval.

b. Manufacturer - Include the catalogue name, company name, address, and telephone number for each product submitted.

2. Equipment Drawings: Submit completely dimensioned plan, elevations, and cross sections of system equipment and subassemblies. Shop drawings shall clearly indicate enclosure size, gutter space, fuse types and sizes, main bus type and rating, etc.

3. Layout Drawing: Submit an integrated, completely dimensioned drawing of

the metal enclosed interrupter switchgear that includes foundation details (where applicable), anchor bolt size and patterns, supports, installation notes and other pertinent setting details.

4. Details: Provide detail drawings of the metal enclosed interrupter switchgear.

5. Product List: Provide a list of equipment and components on all drawings with each product identified by legend reference. Include Product name, manufacturer, and model number.

6. Wiring Diagrams: Submit wiring diagrams for electrical apparatus showing numbered wiring terminals where applicable. In addition, submittal to contain detailed three line diagrams and assembly wiring diagrams.

7. Fuse coordination curves to be provided for all air interrupter switches furnished in the electrical switchgear equipment. These curves are to be included in a separately tabbed section of the submittal binder.

8. Provide from manufacturer a notarized letter certifying compliance with the requirements of the specification. The certification will also identify by serial number(s) the equipment involved. No exceptions to the specifications other than those stipulated at time of submittal to be included in the certification.

9. Certified copies of factory test results shall be submitted.

1.03 QUALITY ASSURANCE

A. Products for, and the execution of, the work of this Section shall satisfy the applicable requirements of the latest NEC Codes and Regulations of Jurisdictional Authorities.

B. The complete assemblies shall be designed, manufactured and tested in accordance with the latest standards of NEMA, ANSI, IEEE, ASTM and UL. The switchgear and all major components shall be of the same manufacture.

C. The Medium Voltage Switching and Protection Assemblies shall comply with ANSI/IEEE C37.20.3.

D. Materials, equipment and installation for this project shall meet or exceed all requirements for a Seismic I geographical location.

1.04 OPERATION AND MAINTENANCE MANUALS

A. Operation and Maintenance (O & M) Manuals shall include detailed parts list, lists of recommended spare parts, circuit diagrams, fuse coordination curves, maintenance procedures and operating instructions.

1.05 FACTORY ASSEMBLY

A. The Medium Voltage Switching and Protection Assemblies and its mechanisms shall be fully assembled and tested at the factory.

1.06 FACTORY TESTS

A. Upon receipt of all approved shop drawings for the switchgear, the manufacturer shall fabricate and factory test the equipment in question.

B. Upon completion of the factory tests, and prior to shipment, the following shall be forwarded to the Engineer for review and comments.

1. Certified test report in accordance with ANSI C37.20.3 requirements, which shall include the procedure for sizing of the bus bars, ascertaining that the equipment in question was tested in strict conformance with all applicable Standards, and that the equipment met or exceeded all tests requirements.

2. A certified quality control report indicating the items checked, the date when checked and initialed by the individual performing the quality control.

3. Provide as part of this submittal the Operational and Maintenance Manuals for the referenced equipment as specified herein in this Section of the Specifications.

C. Equipment shall not be accepted at the job site without prior receipt of the associated certified test report or the certified letter and the certified quality control report referenced to above.

1.07 PROJECT CONDITIONS

A. Equipment shall not be accepted at the job site without prior receipt of the associated certified test report or the certified letter and the certified quality control report referenced to above.

PART 2: PRODUCTS

2.01 MANUFACTURERS

A. Square D Power Zone 4 or approved equal

2.02 RATINGS

A. Switchgear assembly ratings shall be as follows:

1. System Grounding: solid

2. Switch continuous/load break: 200 Amperes

3. Maximum Design Voltage: 15 kV

4. Basic Impulse Level: 95 kV

5. Momentary Current: 61 kA (10 Cycles, Asymmetrical)

6. 2-Second Current: 25 kA Symmetrical

7. Fault close 61 kA Asymmetrical

2.03 CONSTRUCTION

A. The metal-enclosed load interrupter switchgear shall consist of dead front, completely metal-enclosed vertical sections containing load interrupter switches and fuses of the number, rating and type noted on the drawings or specified herein.

B. The following features shall be supplied on every vertical section containing a three-pole, two-position open-closed switch:

1. A high-impact viewing window that permits full view of the position of all three switch blades through the closed door.

2. The door shall be interlocked with the switch so that:

a. The switch must be opened before the door can be opened.

b. The door must be closed before the switch can be closed.

c. A grounded metal barrier in front of every switch to prevent inadvertent contact with any live part, yet allow for a full-view inspection on the switch blade position.

d. Provision for padlocking the switch in the open or closed position and permanent OPEN-CLOSED switch position indicators.

C. Vertical section construction shall be of the universal frame type using die formed and bolted parts. All enclosing covers and doors shall be fabricated from steel whose thickness shall be equal to or greater than those specified in ANSI/IEEE C37.20.3. To facilitate installation and maintenance of cables, a transition section shall be provided next to the switch and fuse section with bussing to the switches.

D. Each vertical section containing a switch shall have a single, full length, flanged front door and shall be equipped with two rotary latch-type padlockable handles. Provision shall be made for operating the switch and storing the removable handle without opening the full length door.

E. Each load interrupter switch shall have the following features:

1. Three-pole gang operated

2. Manual quick-make/quick-break over-toggle-type mechanism that does not require the use of a chain or cable for operation, and utilizes a heavy duty coil spring to provide opening and closing energy.

3. The speed of opening and closing the switch shall be independent of the operator, and it shall be impossible to tease the switch into any intermediate position under normal operation.

4. Separate main and break contacts to provide maximum endurance for fault close and load interrupting duty.

5. Insulating barriers between each phase and between the outer phases and the enclosure.

6. A maintenance provision for slow closing the switch to check switch blade engagement and slow opening the switch to check operation of the arc interrupting contacts.

2.04 WIRING TERMINATIONS

A. One (1) terminal pad per phase shall be provided for attaching contractor-supplied cable terminal lugs for a maximum of two (2) conductors per phase of the sizes indicated on the drawings. Sufficient space shall be supplied in the transition section for contractor supplied electrical stress relief termination devices.

B. Small wiring, fuse blocks and terminal blocks within the vertical section shall be furnished as indicated on the drawings. Each control wire shall be labeled with wire markers. Terminal blocks shall be provided for customer connections to other apparatus.

2.05 FUSES

A. Fault protection shall be furnished by fuses as shown in the contract documents. The fuses shall have a minimum interrupting rating of 50,000 amperes symmetrical at 15 kV and shall be Cutler-Hammer current limiting type. Furnish three (3) spare fuses for each fused switch. Fuse/switch integrated momentary and fault close ratings specified shall have been verified by test. The load-side of the fuses are to be bussed to the transformer specified in Section 16275.

2.06 ACCESSORIESS

A. Supply key interlocks as shown on the drawings.

B. 15 kV station distribution class surge arresters shall be provided connected at the incoming terminations and securely grounded to the metal structure.

2.07 OUTDOOR ENCLOSURES

A. Each outdoor vertical section shall have a sloped weatherproof roof. All exterior openings shall be screened to prevent the entrance of small animals, and barriered to inhibit the entrance of snow, sand, etc. A minimum of one (1) 250-watt, 120-volt space heater shall be provided in each vertical section. Power for the space heaters shall be furnished from the transformer secondary. The design shall be non-walk-in type.

2.08 NAMEPLATES

A. A nameplate shall be mounted on the front door of each switch vertical section in accordance with the drawings.

2.09 FINISH

A. Prior to assembly, all enclosing steel shall be thoroughly cleaned and phosphatized. A powder coating shall be applied electrostatically, then fused on by baking in an oven. The coating is to have a thickness of not less than 1.5 mils. The finish shall have the following properties:

1. Impact resistance (ASTM D-2794): 60 direct/60 indirect.

2. Pencil hardness (ASTM D-3363): H

3. Flexibility (ASTM D-522): Pass 1/8-inch mandrel

4. Salt spray (ASTM B117-85 [20]): 600 hours

5. Color: ANSI 61 gray

2.10 GROUND GRID

A. Exothermic Welded Connectors

1. Fully rated exothermic weld molds to include:

a. Thermite packages and other material that are full-rated to carry 100 percent of cable rating which are letter coded, exothermic welded type.

b. Tees, crosses, splices, and connections of cable to ground rod, ground bus, structural steel or equipment enclosure, bonding to main-ground-grid.

2. Molds, thermite packages and other material from a single manufacturer to be used throughout. Acceptable manufacturers are as follows:

a. Cadweld

b. Thermoweld

c. Or Approved Equal.

B. Ground Rods

1. Sectional UL listed rods of medium carbon steel core and copper clad by molted weld casting process of ¾-inch diameter by ten feet long.

2. Copper clad couplers: joining ground rods to obtain longer length rods.

C. Ground Grid Installation

1. Ground Rod Installation:

a. Drive ground rod using ground rod cap to protect head to 6-inches below grade.

b. Cut off any damaged top of ground rod.

c. Exothermically weld all ground wires to rod

2. Ground Wire Installation:

a. Lay ground cable in trench without splice from ground rod to ground rod, and from one side of grid to other side of grid. Lay cable with 10 percent slack. Form 12-inch minimum radius bends at changes in direction. Set all cables at intersections to diverge at 60 degrees or more from other cables.

b. Route connecting cable from grid in trenches to building. Route exposed cable parallel to building lines except form 12-inch minimum radius for all bends. Schedule 80 conduit where conduit exits grade from 2-feet below finished grade to 3-feet above finished grade for protection. Conduit at other points where subject to damage.

c. Remove any damaged or kinked cable.

3. Exothermic Welding:

a. Exothermically weld all ground wires to ground rods, ground rods at crossings, intersections at sides of grid and all equipment connections.

b. Prior to exothermic welding perform the following:

1) Clean area of all combustible and flammable materials, provide shield to prevent damage to other materials.

2) Clean paint, grease and such other insulating materials from contact points.

3) Inspect molds for damage; discard any faulty mold or any molds used over 40 times.

4) Follow procedures of manufacturer.

5) Inspect finished connections for the following defects and replace any defective splices:

   a) Conductors appearing within the splice area.

   b) Top of splice risers below conductors.

   c) Surface with over 20 percent slag material.

   d) Surface with over slag material that exceeds into conductors.

   e) Freedom from mold blowouts.

   f) Freedom from porosity (small pores less than 1/32-inch are permitted).

6) After completion of welding coat connections and area around connections with coating compound. Assure freedom from pin-holes and holidays in coating.

PART 3 EXECUTION

3.01 FACTORY TESTING

A. The switchgear shall be completely assembled, wired, adjusted and tested at the factory. After assembly, the complete switchgear shall be tested to assure the accuracy of the wiring and the functioning of all equipment.

B. A certified test report of all standard production tests shall be shipped with each assembly.

3.02 INSTALLATION

A. The contractors shall install all equipment per the manufacturer's recommendations and

the contract drawings.

B. All necessary hardware to secure the assembly in place shall be provided by the contractor.

C. The equipment shall be installed and checked in accordance with the manufacturer's recommendations. This shall include but not limited to:

1. Checking to ensure that the pad location is level to within 0.125 inches per three foot of distance in any direction.

2. Checking to ensure that all bus bars are torqued to the manufacturer's recommendations.

3. Assembling all shipping sections, removing all shipping braces and connecting all shipping split mechanical and electrical connections.

4. Securing assemblies to foundation or floor channels.

5. Measuring and recording Megger readings phase to phase, phase to ground, and neutral to ground (four wire systems only).

6. Inspecting and installing all circuit breakers in their proper compartments.

3.03 FIELD QUALITY CONTROL

A. Provide the services of a qualified factory-trained manufacturer's representative to assist the contractor in installation and start-up of the equipment specified under this section for a period of two (2) working days. The manufacturer's representative shall provide technical direction and assistance to the contractor in general assembly of the equipment, connections and adjustments, and testing of the assembly and components contained therein.

B. The contractor shall provide three (3) copies of the manufacturer's field start-up report.

3.04 MANUFACTURER'S CERTIFICATION

A. The qualified factory-trained manufacturer's representative shall certify in writing that the equipment has been installed, adjusted and tested in accordance with the manufacturer's recommendations.

B. The Contractor shall provide three (3) copies of the manufacturer's representative's certification before final payment.

3.05 TRAINING

A. The contractor shall provide a training session for Owner's Representatives for one

(1) normal workday at a jobsite location determined by the owner.

B. The training session shall be conducted by a manufacturer's qualified representative. The training program shall consist of the instruction on the operation of the assembly, circuit breakers, and major components within the assembly.

PART 4: MEASUREMENT AND PAYMENT

4.01 MEDIUM-VOLTAGE SWITCHING AND PROTECTION ASSEMBLIES:

A. Medium-Voltage Switching and Protection Assemblies will not be measured.

B. Payment for each Medium-Voltage Switching and Protection Assemblies will not be paid for directly, but will be considered incidental to item 173 Medium Voltage Metal Clad Switchgear.

4.02 MEDIUM-VOLTAGE SWITCHING AND PROTECTION ASSEMBLIES GROUND GRID:

A. Ground grid will be measured by the unit each, as indicated on the contract bid form, complete in place.

B. Payment for each ground grid will be made by the unit each at the contract price.

4.03 MEDIUM-VOLTAGE SWITCHING AND PROTECTION ASSEMBLIES CONCRETE PAD

A. The Medium-Voltage Switching and Protection Assemblies shall be installed on a precast concrete pad which will be measured by the unit each, as indicated on the contract bid form, complete in place.

B. Design manufacture and install concrete pad in accordance with the Contract Drawings and the provisions of Section 03400. Concrete pad payment will be made by the unit each at the contract price.

END OF SECTION

SECTION 16341

MEDIUM VOLTAGE METAL-CLAD SWITCHGEAR

PART 1 GENERAL

1.01 SECTION INCLUDES

A. Section Includes: Medium voltage 15 kV metal-clad switchgear with vacuum circuit breakers in accordance with the design drawings and as specified herein.

1.02 REFERENCES

A. Potomac Electric Power Company (PEPCO) – Specification Number SEGS051. (Enclosed in the Appendix Section of these Specifications)

B. ANSI/IEEE C37.04 – Standard Rating Structure for AC High-Voltage Circuit Breakers. .

C. ANSI/IEEE C37.06 – AC High-Voltage Circuit Breakers Rated on a Symmetrical Current Basis - Preferred Ratings and Related Required Capabilities.

D. ANSI/IEEE C37.09 - Standard Test Procedure for AC High Voltage Circuit Breakers Rated on a Symmetrical Current Basis.

E. ANSI/IEEE C37.20.2 - Standard for Metal-Clad Switchgear.

F. ANSI/IEEE C37.21 – Standard for Control Switchboards.

G. ANSI/IEEE C37.54 – Standards Standard for Switchgear - Indoor Alternating Current High-Voltage Circuit Breakers Applied as Removable Elements in Metal-Enclosed Switchgear Assemblies - Conformance Test Procedures

H. ANSI/IEEE C37.55 – Standard for Switchgear – Metal-Clad Switchgear Assemblies - Conformance Test Procedures

I. ANSI/IEEE C37.90 – Standard Relays and Relay Systems Associated with Electric Power Apparatus

J. ANSI Z55.1 - Gray Finishes for Industrial Apparatus and Equipment.

K. ANSI/IEEE C57.13 - Requirements for Instrument Transformers.

L. NEMA SG4 - Alternating Current High Voltage Circuit Breakers.

M. NEMA SG5 - Power Switchgear Assemblies.

N. Specification Section 16450 – Outdoor Walk-in Electrical Equipment Housing

O. National Electrical Code (NEC)

P. Underwriter's Laboratory (UL)

1.03 SUBMITTALS

A. Submit shop drawings indicating outline dimensions, enclosure construction, shipping splits, lifting and supporting points, electrical single line diagram, and equipment electrical ratings.

B. Design calculations and drawings and shop drawings:

1. Legend, abbreviations, and general notes.

2. Outline drawings indicating overall dimensions, shipping sections, weights, and aisle space requirement for removable equipment.

3. Elementary diagrams (terminal configurations) for removable circuit breakers, relays, control switches, and meters. Elementary drawings showing connections of all power and control circuits, including all control devices, relays, meters, control switches, terminal points and wire identification diagram.

4. Structural drawings showing space for busway, conduit, and cable connections.

5. Bus arrangement including dimensions and ampere rating of all bus bars, bus duct, connections, and fire stop. Bus arrangement shall be top stabs for incoming feed and bottom stabs for outgoing feeders.

6. Bill of materials for all equipment including quantity, item description, manufacturer, catalog number, rating, and location. Relay data shall also include time/current type and settable range.

7. One line diagram showing all ratings, main connections, and location of all instruments including relays, transformers, and meters

8. Three line diagrams showing all instrument connections including relays transformers and meters.

9. Removable circuit breaker elementary diagrams

10. G & T device elementary diagram.

11. Dimensional front view of each vertical section showing all panel mounted equipment.

12. Front view of all internal panels of switchgear cubicles and control panel,

showing all control devices.

13. Dimensional sectional view of each type of switchgear compartment.

14. Complete point-to-point wiring diagrams or schedules indicating the internal wiring of each component and the interconnections between components.

15. Nameplate schedule and details.

16. List of special tools required for operation and maintenance of all equipment.

17. Control power data for each assembly, including continuous 120vac loads, continuous 125vdc loads and closing and tripping loads of circuit breakers.

C. Catalog Cuts:

1. Relays.

2. Control switches.

3. Indicating lamps.

4. Wire markers.

5. Terminal blocks.

6. Switchgear space heaters.

7. Thermostats.

8. Bus insulation materials.

9. All types of lugs.

10. All types of fuses and circuit breakers.

11. Family of time-current characteristics curves for all types of fuses, relays, and trip devices.

12. Instrument transformer characteristic curves and burden.

13. Metering system devices including hardware and software.

14. G & T devices.

15. Switchgear breaker elements.

D. Calculations:

1. System coordination study for setting protective relay devices on this equipment shall be arranged by the Contractor and submitted for approval in accordance with PEPCO Specification SEGS051 requirements..

E. Test Reports:

1. Submit design and product test plan procedures 1 month prior to factory testing.

2. Factory and field test forms for approval prior to implementation of the tests.

3. Certified reports of all required tests.

4. Seismic Certification, if required by area.

5. Certified test report for paint qualification test performed per ANSI C37.20.2.

F. Operation and Maintenance Manuals:

1. Include descriptive material that will enable owner to maintain equipment at the component level. Provide guidelines for isolating the cause of malfunction and for the removal, repair and replacement of all devices.

2. Calibration data, curves, wiring diagrams, and pertinent information for all components.

3. Operational procedures, both manual and automatic.

4. Recommended preventive maintenance schedules.

5. O&M manuals with inclusion of As-Built drawings within said manuals.

G. Ground Grid:

1. Ground grid layout, all ground grid materials, resistance test procedures and test results shall be submitted for approval.

1.04 OPERATION AND MAINTENANCE DATA

A. List of recommended spare parts containing prices and availability. Recommendation for spare parts will not obligate owner to purchase any such parts.

1.05 QUALITY ASSURANCE

A. Manufacturer: Company specializing in medium voltage metal-clad switchgear with at least five years documented experience. The manufacturer of the switchgear must be the same as the manufacturer of the circuit breaker.

1.06 DELIVERY, STORAGE, AND HANDLING

A. Contractor to accept equipment on site and inspect for shipping damage.

B. Contractor to protect equipment from weather and moisture by covering with heavy plastic or canvas and by maintaining heat within enclosure in accordance with manufacturer's instructions.

1.07 EXTRA MATERIALS/ACCESSORIES

A. Submit one racking handle(s) with equipment. Charging handle to be furnished on each breaker mechanism.

B. Provide one sets of spare control fuses for each set installed.

C. Provide one breaker test cabinet.

D. Provide one test jumper cable.

E. Provide one set of manually applied grounding cablesin accordance with PEPCO Standards.

F. Provide one Automatic Ground and Test device in accordance with PEPCO Standards.

G. Provide one motorized remote control racking accessory.

PART 2 PRODUCTS

2.01 MANUFACTURERS

A. The metal-clad switchgear shall be manufactured by Square D, type MASTERCLAD™, or an approved equal.

2.02 METAL-CLAD SWITCHGEAR ASSEMBLY

A. The metal clad switchgear line-up is to be built to this specification. After final factory switchgear testing, the switchgear line-up will be installed into a prefabricated building as specified in Section 16450. After switchgear is installed, tested in the building as a complete package, it will be shipped to the customer sites for installation and additional field testing. The general

requirements for the metal class switchgear are as follows:

1. Switchgear shall be designed, manufactured, and tested in accordance with the latest version of the applicable ANSI, NEMA, NETA, and UL Standards. Where a discrepancy exists between the standards, the most stringent shall apply.

2. The design and installation of the switchgear shall also conform to the requirements of Potomac Electric Power Company (PEPCO). These requirements include adherence to the latest issue of Specification Number SEGS051 – Guide Specification for Metal-Clad Switchgear for Customer Substation15kV, 3Phase, 60 Hertz, obtaining approval of all manufacturer's shop drawings and product selections, and final acceptance of the equipment.

3. Contractor / Supplier shall be responsible for processing and obtaining all approvals on switchgear and associated equipment from the Utility and others.

B. System Voltage: 13.8 kV nominal, three-phase, 3wire , 60 Hz.

C. Maximum Design Voltage: 15.5kV.

D. Impulse Withstand (Basic Impulse Level): 95 kV.

E. Power Frequency Withstand: 36kV, 1 minute test.

F. Main Bus Ampacity: 1200 amps, continuous.

G. Momentary Current Ratings: Equal to the circuit breaker close and latch rating.

2.03 COMPONENTS

A. Stationary Structure

1. The switchgear shall consist of multiple sections as indicated on the Contract Drawings, including circuit breaker compartments and auxiliary compartments assembled to form a rigid self-supporting completely enclosed structure providing steel barriers between sections.

2. The sections are divided by metal barriers into the following separate compartments:

a. Circuit breaker, instrument, main bus, auxiliary device and cable. Each feeder section shall consist of a single circuit breaker compartment.

B. Circuit Breaker Compartment

1. Each circuit breaker compartment shall be designed to house a horizontal drawout metal-clad vacuum circuit breaker. The stationary primary disconnecting contacts are to be silver-plated copper and mounted within porcelain support bushings. The movable contacts and springs shall be mounted on the circuit breaker element for ease of inspection/maintenance.

2. Entrance to the stationary primary disconnecting contacts shall be automatically covered by metal shutters when the circuit breaker is withdrawn from the connected position to the test or disconnected position or removed from the circuit breaker compartment. Extend a ground bus into the circuit breaker compartment to automatically ground the breaker frame with high-current spring type grounding contacts located on the breaker chassis when in the test and connected positions. Guide rails for positioning the circuit breaker and all other necessary hardware are to be an integral part of the circuit breaker compartment. Blocking devices shall interlock breaker frame sizes to prevent installation of a lower ampere rating or interrupting capacity element into a compartment designed for one of a higher rating. Circuit breakers shall be positioned into the bottom cubicle compartment without use of a transport truck or lift device. No breakers shall be positioned in the upper cubicle compartment.

C. Cable Compartment/Ground Bus

1. Compression type cable lugs shall be furnished as shown on plans. The ground bus shall extend through this compartment for the full length of the switchgear. Auxiliary bus, if needed, and load bus support NEMA Class A-20 standoff insulators shall be Porcelain insulators.

D. Main Bus Compartment

1. The main bus is to be rated 1200 amps and be fully insulated for its entire length with an epoxy coating by the fluidized bed process. The conductors are to be silver-plated copper and be of a bolted design. Access to this compartment is gained from the front or rear of the structure by removing a steel barrier. Provide standard provisions for future extension, as applicable.

E. Doors and Panels

1. Relays, meters, control switches, etc., shall be mounted on a formed front-hinged panel for each circuit breaker compartment.

F. Circuit Breakers:

1. The circuit breakers shall be rated 13,800 nominal volts, 15,000 maximum voltage, 60Hz, with a continuous current rating of 1200 amps and a rated

short circuit current of 31.5kA (750MVA Class) as required by PEPCO. Furnish Square D Type VR circuit breakers with one vacuum interrupter per phase, or approved equal. Breakers of same type and rating shall be completely interchangeable. The circuit breaker shall be operated by means of a stored energy mechanism which is normally charged by a universal motor but can also be charged by the manual handle supplied on each circuit breaker for manual emergency closing or testing. The closing speed of the moving contacts is to be independent of both the control voltage and the operator. Provide a full front shield on the breaker. Secondary control circuits shall be connected automatically with a self-aligning, self-engaging plug and receptacle arrangement when the circuit breaker is racked into the connected position. Provision shall be made for secondary control plug to be manually connected in test position. Six (6) breaker auxiliary contacts (of both type "a" and "b"), shall be provided for external use. Provide 6 additional cell-mounted auxiliary contacts both MOC (form "c" style) and TOC (form "c" style) type for external use. MOC and TOC contacts shall be prewired to terminal blocks within the switchgear cubicle. All auxiliary contacts shall have a minimum interrupting rating of 10A and 125Vdc. The racking mechanism to move the breaker between positions shall be operable with the front door closed and position indication shall be visible with door closed.

2. An interlocking system shall be provided to prevent racking a closed circuit breaker to or from any position. An additional interlock shall automatically discharge the stored-energy operating mechanism springs upon removal of the breaker out of the compartment.

3. The circuit breaker control voltage shall be: 125 volts DC.

G. Ground and Test (G&T) Device

1. G&T device shall be provided for the switchgear assembly. The ratings of the G&T device shall be the applicable ratings of the circuit breakers, except the fault interrupting rating.

2. G&T device shall meet all PEPCO requirements as indicated in PEPCO Specification Number SEGS051, as contained in the Appendix Section of these specifications.

H. Instrument Transformers

1. Current transformers (CT): Each breaker compartment shall have provision for front-accessible mounting of up to four current transformers per phase (ANSI standard C100 relay accuracy), two on bus side and two on cable side of circuit breaker. The current transformer assembly shall be insulated for the full voltage rating of the switchgear. The current transformers wiring shall be Type SIS #12 AWG. Relaying and metering

accuracy shall conform to ANSI Standards.

2. Voltage transformers (VT) are drawout mounted with primary current-limiting fuses and shall have ratio as indicated. The transformers shall have mechanical rating equal to the momentary rating of the circuit breakers and shall have metering accuracy per ANSI Standards.

3. Shorting style terminal blocks shall be provided for all CT secondary wiring.

4. Test switches shall be installed in the secondary circuit between each instrument transformer and the relay the instrument transformer is supplying. PEPCO approved FT Type test, current test switch, 10 pole, ABB Style 498A020G01 and Voltage test switch, 4 pole, ABB Style 129A506G01 shall be provided.

I. Control Power Transformers

1. Control Power Transformers shall be installed with ratings and functions as indicated to provide for the facility's electrical power needs.

J. Control Wiring

1. The switchgear shall be wired with type SIS #14 AWG, except where larger size wire is specified. The switchgear shall be provided with terminal blocks for outgoing control connections. Wire markers shall be provided for each end of all control wires.

K. Protective Relays: Provide relays as indicated on drawings for each circuit breaker and in accordance with PEPCO required for the specific relay device.

L. Digital Power Meters (DPM) shall be provided where indicated on the Contract Drawings. DPMs shall meet ANSI/IEEE requirements for use in medium voltage switchgear.

M. Indicating lamps shall be light emitting diodes (LED) type GE ET-16 or approved equal.

N. Terminal Blocks shall have screw type terminals, barrier type, and rated for 600Vac, 20A minimum, with identifying marker strips.

O. Nameplates and Signs:

1. Nameplates shall be screw mounted and provided for each switchgear cubicle and for major externally and internally mounted devices including, but not limited to, instruments, meters, control switches, and relays to identify its function and where applicable, its position.

2. Nameplates shall consist of letters and numbers engraved on a laminated thermosetting plastic material providing white letters and numbers on a black background. Size of letters and figures shall be approximately 1/8 inch for device nameplates 7/16 inch for cubicle nameplates, and 1 inch for switchgear designations.

3. Nameplates shall be fastened with two oval-head stainless steel machine screws.

4. Number, location, and designation of nameplates shall be as approved by the Engineer.

5. Suitable warning signs shall be provided for each switchgear having the following description: "WARNING - HIGH VOLTAGE - KEEP OUT". The sign shall be approximately 5 inches by 9 inches and fabricated from sheet metal with white lettering on a red background. Lettering shall be approximately one inch high normal block lettering. Fasten signs with four flathead stainless steel machine screws.

2.04 SWITCHGEAR FABRICATION

A. Construction: Each equipment bay shall be a separately constructed cubicle assembled to form a rigid freestanding unit. Minimum sheet metal thickness shall be 11 gauge steel on all exterior surfaces. Adjacent bays shall be securely bolted together to form an integrated rigid structure. Rear switchgear doors shall employ 3-point latching mechanisms with padlock provisions. Each individual unit shall be braced to prevent distortion under normal conditions as well as during interruption of short circuit currents.

B. Structural details of each cubicle for the same breaker rating shall be identical. Cubicles shall be uniform in height and depth, and built to form a continuous structure lining up in front and rear.

C. All louvers or other ventilating openings shall be protected against dust or other foreign material. No louvers or ventilation openings shall be located on top of the switchgear unless they approved by the Engineer prior to fabrication.

D. Provide sheet steel doors for access to the circuit breaker and instrument compartments, with stainless steel hinges with one or more handles, knurled steel screws, or a combination of these in order to firmly hold door closed. Doors shall be pad-lockable. Doors to access the metering cubicle shall employ a handle with 3-point latching mechanism and pad lockable provisions. Stops shall be provided to hold doors in the open position. Doors shall open at least 135 degrees.

E. All insulating materials used for bus supports, barriers, or covers shall be of high dielectric strength, low moisture absorbing, flame retardant, arc resistant, and high impact strength material.

F. Space heaters with mechanical guards to prevent inadvertent contact with thermal elements shall be provided in each vertical section. Heaters shall be low temperature type, rated 240 volts and operated at 120 volts, each protected by an individual single pole molded case circuit breaker within the switchgear cubicle of suitable rating. Heaters shall be sized to keep the air inside the cubicle above its dew point and shall be thermostatically controlled. Thermostats shall be differential type.

G. Switchgear dimensions inclusive of all primary cable compartments, primary cable connections, bus work, metering related equipment/sections shall confirm to PEPCO requirements.

H. The metal-clad switchgear shall be fully assembled, inspected and tested at the factory prior to its shipment for incorporation into its prefabricated walk-in enclosure as noted elsewhere within these Specifications.

2.05 SWITCHGEAR FACTORY FINISHING

A. All steel parts, except galvanized (where used), shall be cleaned and a zinc-phosphate (outdoor equipment) or iron phosphate (indoor equipment) pre-treatment applied prior to paint application.

B. Paint color shall be ANSI-61 [light grey]; TGIC polyester powder, applied electrostatically through air. Following paint application, parts shall be baked to produce a hard durable finish. The average thickness of the paint film shall be 2.0 mils. Paint film shall be uniform in color and free from blisters, sags, flaking and peeling.

C. Adequacy of paint finish to inhibit the buildup of rust on ferrous metal materials shall be tested and evaluated per paragraphs 5.2.8.1-7 of ANSI C37.20.2-1987. Salt spray withstand tests in accordance with ASTM #D-1654 and #B-117 shall be performed on a periodic basis to provide conformance with the corrosion resistance standard of at least 2500 hours minimum (outdoor equipment) or 600 hours minimum (indoor equipment).

2.06 GROUND GRID

A. Exothermic Welded Connectors

1. Fully rated exothermic weld molds to include:

a. Thermite packages and other material that are full-rated to carry 100 percent of cable rating which are letter coded, exothermic welded type.

b. Tees, crosses, splices, and connections of cable to ground rod, ground bus, structural steel or equipment enclosure, bonding to main-ground-grid.

2. Molds, thermite packages and other material from a single manufacturer to be used throughout. Acceptable manufacturers are as follows:

   a. Cadweld

   b. Thermoweld

   c. Or Approved Equal.

B. Ground Rods

1. Sectional UL listed rods of medium carbon steel core and copper clad by molted weld casting process of ¾-inch diameter by ten feet long.

2. Copper clad couplers: joining ground rods to obtain longer length rods.

C. Ground Grid Installation

1. Ground Rod Installation:

   a. Drive ground rod using ground rod cap to protect head to 6-inches below grade.

   b. Cut off any damaged top of ground rod.

   c. Exothermically weld all ground wires to rod

2. Ground Wire Installation:

   a. Lay ground cable in trench without splice from ground rod to ground rod, and from one side of grid to other side of grid. Lay cable with 10 percent slack. Form 12-inch minimum radius bends at changes in direction. Set all cables at intersections to diverge at 60 degrees or more from other cables.

   b. Route connecting cable from grid in trenches to building. Route exposed cable parallel to building lines except form 12-inch minimum radius for all bends. Schedule 80 conduit where conduit exits grade from 2-feet below finished grade to 3-feet above finished grade for protection. Conduit at other points where subject to damage.

   c. Remove any damaged or kinked cable.

3. Exothermic Welding:

   a. Exothermically weld all ground wires to ground rods, ground rods at crossings, intersections at sides of grid and all equipment

connections.

b. Prior to exothermic welding perform the following:

1) Clean area of all combustible and flammable materials, provide shield to prevent damage to other materials.

2) Clean paint, grease and such other insulating materials from contact points.

3) Inspect molds for damage; discard any faulty mold or any molds used over 40 times.

4) Follow procedures of manufacturer.

5) Inspect finished connections for the following defects and replace any defective splices:

a) Conductors appearing within the splice area.

b) Top of splice risers below conductors.

c) Surface with over 20 percent slag material.

d) Surface with over slag material that exceeds into conductors.

e) Freedom from mold blowouts.

f) Freedom from porosity (small pores less than 1/32-inch are permitted).

6) After completion of welding coat connections and area around connections with coating compound. Assure freedom from pin-holes and holidays in coating.

PART 3 EXECUTION

3.01 EXAMINATION

A. Visually inspect switchgear for evidence of damage and verify that surfaces are ready to receive work.

B. Visually inspect to confirm that all items and accessories are in accordance with specifications and drawings.

C. Verify field measurements are as [shown on drawings] [shown on shop drawings] [instructed by manufacturer].

D. Verify that required utilities (e.g., control voltage for heater circuits on outdoor switchgear) are available, in proper location, and ready for use.

E. Beginning of installation means installer accepts existing surface conditions.

F. Switchgear factory test shall be in accordance with applicable IEEE standard production test for AC metal clad switchgear.

3.02 FACTORY TESTING

A. The switchgear shall be factory tested in accordance with IEEE C37.20.2.

B. Design Tests - Metal clad switchgear assemblies of similar design having successfully passed the requirements of C37.20.2 Design Test may have their certified test results submitted for owner review and approval.

C. Production Tests - All production tests as required by IEEE C37.20.2 shall be performed.

3.03 INSTALLATION

A. Install in accordance with manufacturer's instructions, applicable requirements of the NEC and in accordance with recognized industry practices.

B. Install cables, as provided by the switchgear manufacturer, to connect the primary surge arresters.

C. Bending of high-voltage cables should be avoided or minimized. All necessary bends should meet at least the minimum radii specified by the cable manufacturer.

D. Perform factory testing per ANSI applicable standards-certified test reports performed on similar equipment may be acceptable in lieu of actual test.

3.04 FIELD QUALITY CONTROL

A. Field inspection and testing will be performed by the installing contractor.

B. Visually inspect for physical damage.

C. Perform start-up tests in accordance with manufacturer's instruction manual when final assembly is on site.

D. Perform field dielectric tests according to ANSI/IEEE C37.20.2, paragraph 6.5 when final assembly is on site.

E. Touch-up paint all chips and scratches with manufacturer-supplied paint and leave remaining paint with owner.

F. Verify all control circuitry and key interlock operation.

PART 4: MEASUREMENT AND PAYMENT

4.01 MEDIUM VOLTAGE METAL CLAD SWITCHGEAR

A. Medium-Voltage Metal Clad Switchgear will be measured by the unit each, as indicated on the contract bid form, complete in place.

B. Payment for each Medium-Voltage Metal Clad Switchgear will be paid at the contract unit price per each, complete in place, accepted, which full price will be full compensation for all material including Medium Voltage Switching and Protection Assemblies, equipment, tools, labor and all work to complete the item.

4.02 MEDIUM VOLTAGE METAL CLAD SWITCHGEAR GROUND GRID:

A. Ground grid will be measured by the unit each, as indicated on the contract bid form, complete in place.

B. Payment for each ground grid will be made by the unit each at the contract price.

4.03 MEDIUM VOLTAGE METAL CLAD SWITCHGEAR CONCRETE FOUNDATION

A. The Medium-Voltage Metal Clad Switchgear shall be installed on a concrete foundation which will be measured by the unit each, as indicated on the contract bid form, complete in place..

B. Design manufacture and install concrete pad in accordance with the Contract Drawings and the provisions of Section 03400. Concrete foundation payment will be made by the unit each at the contract price.

END OF SECTION

SECTION 16600

SWITCH TRACK SNOWMELTER

PART 1 - GENERAL

1.01 DESCRIPTION

A. This specification covers the procurement of switch track snowmelters, mounting hardware, and Breaker / Control Cabinet capable of supplying sufficient heat to keep switches free from snow and ice.

B. Tubular type switch heaters are straight element heaters with circular cross section and overall length as specified in Section 1.05 and on the Drawings.

C. Hair pin type switch rod heaters are tubular type heater bent to form a "U" shape of two (2) inches minimum bending radius and with legs of lengths as specified in Section 1.05 and on the Drawings.

D. Breaker / Control Cabinet is to be factory pre-wired with individual circuit breakers and controls to operate all the switch heaters remotely, or through a dispatch controller, or locally through manual switches.

E. Power for the Snowmelter system shall be supplied from a 480 VAC, 3 phase, 60 Hz Utility source by way of an outdoor 480 VAC switchgear.

1.02 REFERENCE STANDARDS:

A. The following standards, latest issue, shall apply unless modified by design or request of the Engineer.

1. Association of American Railroad, Section 11, Chapter 2, Part 4.

2. American Society for Testing and Material.

a. A-123 Hot galvanized coating.

b. A-153 Zinc coating (hot dip) on iron and steel casting.

c. A-321 Steel bars carbon, quenched and tempered.

d. A-325 High strength bolts.

e. A-347 Test method for A.C. magnetic properties of materials using the modified Hay bridge method.

3. American National Standard Institute (ANSI).

4. American Railway Engineering and Maintenance-of-Way Association.

1.03 RELATED DOCUMENTS:

A. Section 01300 – Submittals

B. Section 01450 – Quality Assurance and Quality Control

C. Section 01600 – Products

D. Section 16120 – Switch Heaters and Standby Power Cables

E. Section 17221 – Interior and Exterior Wire and Cable

F. Section 17251 – Tests and Inspection

1.04 TESTING:

A. Switch Heaters

1. All tests shall be made in the presence of the Engineer. All tests called for herein shall be at the expense of the manufacturer.

2. Wattage for each heater shall be measured at operating voltage as indicated in Section 1.05, Electrical Characteristics. The rating must be within plus 10 percent or minus 5 percent of the wattages specified.

3. When the temperature of the sheath of the heater has been raised to 1000°F by applying power to the heater, all heaters must withstand, for one (1) minute, between conductor and sheath, a high potential test of twice the proposed operating voltage (RMS - 60 hertz) specified plus 1000 volts and must have an insulation resistance of at least one (1) megohm measured with a 1000 volt megger.

4. After the sheath has attained a temperature of 400°F, (and while de-energized) the complete heater shall then be quickly immersed in cold water and remain immersed for one hour minimum. Immediately upon withdrawal from the water the heater must withstand for one (1) minute, between conductor and sheath, a high potential test of 2500 volts (RMS - 60 hertz) and must have an

insulation resistance of at least one (1) megohm measured with a 1000 volt megger.

5. After completing test No. 4 repeat test No. 3 completely.

6. The heaters shall withstand, without damage, at ambient room temperature for thirty (30) minutes, 125% of rated potential across the winding of one unit.

7. After cooling under the same condition as in test No. 6, the heater shall withstand, without damage, 133-1/3% of rated potential for one (1) minute.

8. Under tests No. 6 and No. 7 two (2) units of each length shall be selected for test and results and shall be considered representative for each group of heater to be tested. The units tested shall be identified by stamping the sheath "Tested" to identify same for future reference.

9. If, in any of the foregoing tests, faults should develop as result of same, requiring opening the sheath to repair, the unit or units shall be rejected.

B. Control: The following test shall be made at the manufacturing plant.

1. On/Off power indication.

2. Ground fault indication

3. Overload protection and circuit breaker adequate clearing time for 60 Hz operation.

4. Adjustable air temperature sensor.

5. Cabinet space heater.

6. Cabinet space ventilation fan.

1.05 ELECTRICAL AND PHYSICAL CHARACTERISTICS:

A. Straight Heater - Switch Track #8 /10

1.	Operating voltage	480 V
2.	Operating frequency	60 Hz
3.	Wattage per foot full length	375 watts

4.	Length between terminal housing	18 feet
5.	Active length	16 feet
6.	Terminal housing type	Non-separable
7.	Lead length	10’ and 15’

1.06 SUBMITTALS:

A. Comply with the provisions of Section 01300.

B. The supplier shall furnish one reproducible copy or ten (10) copies of the following information:

1. Assembly instructions with a list of special tools required, if applicable.
2. Maintenance instructions with overhead schedule included.
3. Recommended spare parts.
4. Parts list.
5. Overall dimensions and weights.
6. Outline drawings showing location of parts.
7. Recommended mounting techniques for switch heaters and control panel.
8. Connection diagram of switch heater control panel.

C. Submit design and production test procedure to MTA not less than 30 days prior to testing.

D. Submit details and certified copies of results to MTA within 30 days after completion of tests.

1.07 PRODUCT DELIVERY, STORAGE AND HANDLING:

A. Protect switch heaters and control cabinets from damage throughout delivery, storage and handling.

B. Store materials and equipment, both on and off site in accordance with manufacturer's instructions.

C. Heater shall be shipped straight and the manufacturer shall provide a suitable physical protection to prevent damage in shipment.

D. Manufacturer shall deliver control cabinet in factory fabricated shipping crates.

E. Should occasion arise necessitating deviation from shipping as required; the manufacturer shall notify the Engineer as to circumstances and obtain permission for desired change.

1.08 WARRANTY:

A. The manufacturer shall warrant the material covered by this specification to be free from defects in material and workmanship under ordinary use and service. His obligation under this warranty being limited to manufacturing, at the point of production, to replace any part or parts which shall be found defective within one year after shipment to the purchaser.

PART 2 - PRODUCT

2.01 SWITCH HEATER:

A. The switch heater elements shall be made of nickel-chromium alloy covered with magnesium-oxide insulation and protected with an outer casing tube made of stainless steel 321, stainless steel 374, Incoloy, or Inconel.

B. The active length casing shall have a wall thickness of min. 0.030 inch and an outside diameter of 0.50 inch.

C. In addition to the active length of the heater, the casing shall include at each end an inactive portion 8 to 12 inches long of the same outer dimension and material - this is to be measured from the end of the active portion to the center of the terminal housing.

D. There shall not be more than one splice per heater. The splice shall be centrally located and so designed and constructed as to provide a non-heating length of uniform strength throughout the splice. Its section shall not exceed 0.75 inch in diameter and 6 inches in length.

E. Where there is no center splice, an anti-creep collar shall be provided at the center of the heater. The section shall not exceed 0.75 inches in diameter and 6 inches in length.

F. The terminal housing between the heater and the lead shall provide an electrical connection of the non-separable type.

G. The terminal housing on each end of the heater shall positively seal the

heater tube against the entrance of moisture and provide an outer housing for the physical, electrical and moisture protection of the electrical connection. The terminal housing shall make use of corrosion-resistant materials for all metallic parts and non-wicking type materials for all electrical insulating parts. The terminal housing shall not exceed 1 5/8 inches in outside diameter and shall be round in cross-section.

H. The following information shall be stamped on the terminal housing at one end of the heater only (on the high heat end of graduated heaters) with 1/32 inch letters.

1. The word "Point".

2. Name of manufacturer.

3. Type and part number of heater.

4. Total wattage.

5. Watts per foot.

6. Voltage.

I. Flexible Leads

1. The heater shall be provided at each end with a flexible lead of No. 4 AWG copper cable, stranded to Class C.

2. Cable insulation shall be 3/64 inches thick and shall meet ASTM Specification D-754 requirements. It shall be heat resistant rubber compound over which shall be placed a sheath of oil-resistant compound 3/64 inch thick which shall meet ASTM Specification D-752 requirements.

J. Terminal Housing Supports

1. The material for the terminal housing support shall be corrosion-resistant, 1/8 inch thick by 1 1/2 inches wide.

2. The support shall be provided with two holes and two bolts 3/8 inch in diameter each, spaced of three inches apart for attaching the support at the neutral axis of the rail. The support shall be made to allow lateral movement of the heater resulting from expansion and contraction.

K. Heater Support Assembly

1. The heater support assembly shall consist of (1) heater clip, (1)

insulated retainer and (1) retainer clamp, (all boltless).

2. The material of the heater clip shall be corrosion resistant, 1/8 inch thick by 1 1/6 inches wide. The edges in contact with the heater shall be rounded to prevent cutting the heater tube.

3. The support shall be made to allow lateral movement of the heater resulting from expansion and contraction.

L. Anti-Creep Collar

1. The material of the anti-creep collar shall be corrosion-resistant 1/8 inch thick, not exceeding 6 inches wide.

2. The collar shall be permanently attached to the heater tube by suitable means and at the center of the heater unless otherwise specified on the Contract Drawings.

M. Anti-Creep Clamps

1. The material of the anti-creep clamp shall be 1/8 inch thick by 1 1/2 inches wide and corrosion resistant. The height of the clamp will vary with the rail size.

2. The anti-creep clamp shall be made to prevent lateral movement of the heater due to vibration or expansion and contraction when the clamp is used instead of the anti-creep collar. The edges in contact with the heater shall be rounded to prevent cutting the heater tube.

N. The supports, collars, clamps, bolts, washers, and nuts shall be supplied by the manufacturer unless otherwise specified by the purchaser.

O. Switch heater and associated hardware shall be manufactured by Rails Company, or approved equal.

2.02 SNOWMELTER CONTROL CABINET:

A. Control Cabinet shall be assembled as a complete unit ready to be installed and operated in modular sections. The Snow Melter Control Cabinet shall be supplied by Rails Company (973-763-4320) or an approved equal.

B. Multiple control heater units shall be assembled at the manufacturer's plant in weather, dustproof housing, this housing shall be complete with front padlock doors, rear bolted sections and foundation footing.

C. Cabinet's primary source shall be 480 VAC, three phase, 60 Hz. The unit shall have a copper ground bus.

D. Main circuit breaker with adequate rating, interrupting capacity and clearing time shall be provided for protection.

E. Individual heater circuit breakers shall be provided for connection and protection of each switch heater. One (1) spares shall be provided for future addition.

F. A low voltage control transformer shall provide 120 VAC for control circuits.

G. An override manual switch located on each module shall turn-on the switch heater, another shall turn it off.

H. Open heater circuit indication shall be provided.

I. Cabinet space heater with fan shall be provided.

J. Indications

1. Green light shall indicate breaker is Open ("Off").

2. Red light shall indicate breaker is "Closed" ("On").

3. White light shall indicate a ground fault condition.

4. Yellow light shall indicate breaker "Tripped".

K. Identification name plate shall be fastened on each output section indicating the location of heaters as shown on Contract Drawings.

2.03 SNOWMELTER CABLE:

A. Comply with the provisions of Section 16120.

B. Cables shall be installed in underground PVC schedule 80 conduits.

C. Cable to each switch heater shall be #4, 2 KV ethylene-propylene base compound insulation meeting the requirements of ICEA, Specification S-68-516.

D. Cable from the Substation to the input of the Snow Melter Control Cabinet shall be 500 kcmil, 2 KV ethylene-propylene base compound insulation meeting the requirements of ICEA, Specification S-68-516.

E. Conductor shall be soft or annealed copper, meeting the requirements of

ASTM B-33 or ASTMB-189 before stranding. Conductor shall be stranded in accordance with ASTM B-8, Class B.

F. Insulation thickness shall be 2,000 volts for 480 volt power cables in accordance with ICEA specification S-68-516. For #4 cable insulation thickness to be 55 mils.

G. Jacket shall be of heavy duty chlor-sulfonated polyethylene which meets the requirements of ICEA Specification S-68-516, with a thickness of 30 mils.

H. Cables from the ground resistors (center tap to ground) in the Snow Melter Control Cabinet, to the tracks are to be #6 AWG, 600 VAC. Cables are to be thermo welded to each track.

2.04 SNOW DETECTOR:

A. The snow detector circuits shall be operational only when the SS switch is in the AUTO position.

B. The snow detector shall have a time delayed relay, an ambient temperature sensor and controller, control transformer, and sensing heads .

C. There shall be two (2) snow senor heads; one at the tracks and one near the Snow Melter Control cabinet.

D. The Snow Detector control box can be mount inside the Snow Melter Control Cabinet or in a fiberglass NEMA 4X enclosure outside.

E. The Snow Detector shall be supplied by Rails, Inc. cat number SD-10730-1F, with sensor heads SD-7900. If mounted outside the Snow Melter Control cabinet, 120 VAC auxiliary power will have to be brought to the box.

PART 3 - EXECUTION

3.01 EXAMINATION:

A. Visually inspect switch heaters and control cabinet for evidence of damage and to confirm that all items are in accordance with specifications and Drawings.

3.02 INSTALLATION:

A. Install switch heaters and control cabinet in accordance with manufacturer’s instructions, applicable requirements of the NEC and in

accordance with the Contract Drawings and recognized industry practices.

B. All wiring shall be provided as required. Conductor sizes, composition and insulation shall be as indicated on the Contract Drawings. All necessary additional hardware such as bushings, connectors, grounding conductors, and all basic electrical materials needed for the installation of the equipment and accessories shall be supplied and installed by the Contractor.

PART 4 – MEASUREMENT AND PAYMENT

4.01 SNOWMELT CONTROL CABINET:

A. The Snowmelt Control Cabinet shall be shall be measured per each, complete in place. The Snowmelt Control Cabinet shall be measured for payment with the setting and anchoring of the cabinet on its foundation, anchoring, and grounding.

B. The Snowmelt Control Cabinet shall be paid at the Contract unit price bid per each. This price shall be full compensation for all materials, including labor, equipment, and all work incidentals necessary to complete the item as specified.

4.02 SWITCH HEATERS:

A. The Switch Heaters shall be shall be measured per each, complete in place.

B. The Switch Heaters shall be paid at the Contract unit price bid per each. This price shall be full compensation for all materials, including labor, equipment, and all work incidentals necessary to complete the item as specified.

4.03 SWITCH HEATER JUNCTION BOX:

A. The Switch Heater Junction Box shall be shall be measured per each, complete in place.

B. The Switch Heater Junction Box shall be paid at the Contract unit price bid per each. This price shall be full compensation for all materials, including labor, equipment, and all work incidentals necessary to complete the item as specified.

4.04 SNOW DETECTOR CONTROLS & SENSORS:

A. The Snow Detector Controls & Sensors shall be shall be measured per each, complete in place.

B. Snow Detector Controls & Sensors shall be paid at the Contract unit price bid per each. This price shall be full compensation for all materials, including labor, equipment, and all work incidentals necessary to complete the item as specified.

END OF SECTION

SECTION 17125

TRACK SWITCH MACHINE LAYOUTS

PART 1: GENERAL

1.01 DESCRIPTION:

A. This Section includes specifications for furnishing and installing Track Switch Machine Layouts.

B. Contractor shall furnish and install electro-hydraulic track switch machine layouts model TS-4500 manufactured by Global Rail Systems, or approved equivalent.

1.02 QUALITY ASSURANCE:

A. Factory test track switch machines in accordance with the manufacturer's standard tests and the provisions of Section 17251.

B. Perform field tests as specified in Section 17251.

1.03 SUBMITTALS: Unless otherwise specified, submittals shall be in accordance with Sections 01300.

A. Submit manufacturer's specifications of the Track Switch Machine Layout.

B. Submit installation drawings for the Track Switch Machine Layout.

C. Submit as-built drawings for the Track Switch Machine Layouts.

D. Submit installation, maintenance and operation manuals for the Track Switch Machine Layout.

E. Submit factory test procedures and test reports for the Track Switch Machine Layout.

F. Submit field test procedures and test reports for the Track Switch Machine Layout.

G. Submit drawings for the top line assembly of the yard switch machine together with a bill of materials.

PART 2: PRODUCTS

2.01 TRACK SWITCH MACHINE LAYOUT:

A. The Track Switch Machine Layouts shall include a low profile trailable yard switch machine complete with all necessary rods and hardware to mechanically couple the yard switch machine to the existing track ties and track switch. The layouts shall also include items such as risers, junction boxes, cable and electrical fittings necessary to connect the switch machine to the yard control equipment.

B. Switch Machines:

1. Switch machines shall be electro-hydraulic type conforming to the AREMA Communications & Signal Manual, except as otherwise specified.

2. Switch machine shall come with built-in hydraulic pressure sensors to remove power from the switch motor under overloading conditions or approved equal.

3. Proximity switches shall be used to determine when the switch machine is in the full normal and full reverse position.

4. Switch machine shall come equipped with a hydraulic hand pump mechanism for manual operation. In the hand pump mode, the power source to switch motor shall be disconnected. The switch machine shall incorporate a disconnect feature which will allow personnel to make switch machine un-throwable. Disconnect feature must be able to be mechanically padlocked in force.

5. Electrically insulated throw rod shall be provided to prevent effects on the track circuit that is provided for detector locking of the switch.

6. Physical Characteristics:

a. Switch machine shall be constructed of heavy steel plate and steel structural shapes for maximum strength, vandal and weather resistance.

b. The cover shall be a one-piece unit and one person must be able to remove and install the cover without assistance.

c. The cover surface shall be of a non-skid design.

7. Operating Characteristics:

a. Switch machine motor shall be operated from an internal 12 volt DC battery and battery charger as specified in section 17173. Charger shall be rated for operation at 120V AC nominal, and shall operate without damage at voltages between 105V and 130V AC.

b. Switch machine shall come equipped with a programmable micro controller for each switch control. Switch machine shall come equipped with a mounted local pushbutton mounted in a lockable enclosure mounted to the controlling signal case and a wayside pushbutton located near the yard switches. Pushbuttons shall operate the yard switch normal and reverse from either set of controlling pushbuttons.

c. The operating temperatures shall be minimum -40 degree F to maximum 130 degree F.

d. Minimum throw bar trust = 4500 lbs.

e. Maximum throw time = 2.2 sec.

f. The hydraulic oil to operate the machine shall be AeroShell #4 Fluid4 MIL-H-5606A or approved equal, which is mineral hydraulic oil with very good range of operation temperatures. Additionally, the switch machine shall be completely sealed enclosure to contain a possible hydraulic fluid spill as well as preventing water, insect and rodent ingress.

g. Switch machine throw length will be self adjusting at 4-3/4" to 6".

h. Point closed holding force shall be not less than 1000 lbs.

i. Hand pump operation shall provide the same integrity for switch point movement and throw stroke as provided by power operation. A storage device shall be mounted to the machine for hosting the hand throw handle to prevent inadvertent misplacement of the handle. The provided handle must be sufficient in corrosion protection when subjected to the outdoor environments.

j. Switch machine shall be undamaged by trailing or running through at speeds not exceeding 20 mph.

k. Switch machine shall remain in the last position that it was forced on a trail through until detector locking has expired (10 seconds loss of shunt).

C. Painting and Identification:

1. Two letters, "N" and "R" made of malleable metal, painted white, shall be used to denote the normal and reverse position of the track switch points and shall be securely fastened.

2. Numbers, made of malleable metal, painted white, shall be used to denote switch identification. Contractor shall submit for approval method for fastening and provide means for mitigation of water ingress to the cover of the switch machine to cover as shown in the Contract Drawings.

3. Except as otherwise specified, components of track switch machine layouts shall be finished in accordance with AREMA Communications & Signal Manual. The finish color shall be approved by the Engineer.

D. Rods and Hardware: Rods and hardware shall be in accordance with the AREMA Communications & Signal Manual and be forged without welds.

1. Track Switch Machine Layout shall include, throw rods, throw rod brackets and lugs. Additionally, the layout shall include all other required rods, screws, bolts, washers, plates, and hardware necessary to install the switch machine and switch point connections.

2. Switch rods shall be manufactured to accommodate a wide latitude in the operating adjustment.

3. Track Switch Machine Layouts shall be electrically insulated from the running rails.

4. Track Switch Machine Layouts shall electrically insulate one running rail from the other.

E. Each switch machine shall be supplied with an internal wiring diagram protected by a plastic laminate and fastened to the underside of the contact compartment cover.

F. Electrical Fittings: Track Switch Machine Layouts shall include the necessary electrical fittings to interface the switch machine to the Yard Control System equipment. This shall include junction boxes, pedestals,

foundations, mounting brackets, conduit, handholes, hoses, tubing, terminals, and hardware. Terminal blocks mounted in junction boxes shall conform to the AREMA Communications & Signal Manual.

G. Accessories:

1. Each switch machine, hand pump cover, and junction box shall be equipped with padlocks to restrict access into the equipment.

2. Padlocks shall be the same as padlocks now in service and as specified in Section 17263.

3. Track Switch Machine Layouts shall be equipped with mechanical targets with reflective indications panels. Green shall indicate straight rail position and yellow shall indicate turnout rail position. Target shall be in full view of the vehicle operator and must not display conflicting indications to the operator.

4. Hand pump handle shall be supplied with each switch machine. Handle shall be locked to the machine or locked in a separate, lockable, box adjacent to the switch machine.

PART 3: EXECUTION

3.01 GENERAL:

A. Control and indication circuits for switch machines shall be designed in accordance with this Specification and the Contract Drawings.

3.02 TRACK SWITCH MACHINE LAYOUT:

A. Install the Track Switch Machine Layouts at locations as shown on the Contract Drawings.

B. Wood Ties:

1. Switch machines shall be installed on switch ties as shown on Contract Drawings.

2. Before installing the Track Switch Machine Layout, the Contractor shall align and space the track ties in accordance with the approved installation drawing. Part of this procedure shall be to condition the switch points to move without binding.

3. Remove any ballast necessary for the installation of each Track Switch Machine Layout. Replace and tamp the ballast after installation is complete. Ballast between layout ties should be 2" minimum below all operating rods and the switch machine.

4. Contractor shall drill, cut, and dap ties up to a 3-1/2 inch limit if required for the installation. Cut surfaces shall be thoroughly saturated with hot creosote oil.

5. Restore proper track alignment and surface after completion of all work.

C. Installation Procedure:

1. Contractor shall not interfere with the daily routine of the yard operation.

2. New Track Switch Machine Layouts shall be fully adjusted for proper point closure, open point gap, and obstruction detection.

3. New Track Switch Machine Layouts shall be tested for obstruction detection and local pushbutton operation.

4. Completed test results and safety certification check lists shall be submitted for each Track Switch Machine Layouts placed in local pushbutton service. These test results and safety certifications shall be submitted to the Engineer within 1 hour of test completion and prior to use by operations. Contractor shall operate and maintain the power switch until such test results and safety certifications are submitted.

5. Coat all machined surfaces susceptible to rusting, both external and internal, including screw threads, with petroleum jelly or other approved corrosion preventive.

6. If tie plates have excess grease, dirt or any other excessive build up or the special track work displays mechanical deficiencies that prevent normal switch operation, Contractor shall notify the Engineer.

D. Cables terminating in the switch machine shall be dressed and potheaded. The individual conductors shall be fanned in a neat manner, tagged and terminated.

3.03 IDENTIFICATION:

A. Contractor shall install, for each layout, the letters "N" and "R" for the purpose of identifying the position of the switch points. The "N" shall be placed on the normally closed point side. These letters shall be securely attached to the first tie adjacent to, but not supporting the switch points.

B. Contractor shall install, for each layout, numbers for the purpose of switch identification. These numbers shall be securely attached to the first tie adjacent to, but not supporting the switch points.

C. Switch identification shall be oriented as to be viewed from front of switch, facing points.

3.04 FIELD TESTS: Contractor shall test all functions of each Track Switch Machine Layout in accordance with Section 17251.

PART 4: MEASUREMENT AND PAYMENT

4.01 TRACK SWITCH MACHINE LAYOUT:

A. Track Switch Machine Layout will be measured per each.

B. Track Switch Machine Layout will be paid for at the contract unit price bid per each, complete in place, accepted, which price shall be full compensation for all material, equipment, tools, labor and all work incidental to complete the item as specified.

END OF SECTION

APPENDIX E

AMTRAK SPECIFICATIONS

T-0208-0140
MARC WEDGE STORAGE YARD
AT UNION STATION

TABLE OF CONTENTS – APPENDIX E

DESCRIPTION PAGE NO.

TABLE OF CONTENTS . . . . . .TOC 1

EP 3014 MAINTENANCE AND PROTECTION OF RAILROAD TRAFFIC DURING CONTRACTOR OPERATIONS . . . . . E1 - 2

01141A SAFETY AND PROTECTION OF RAILROAD TRAFFIC AND PROPERTY . . . . . E3 - 6

01142A SUBMISSION DOCUMENTATION REQUIRED FOR AMTRAK REVIEW AND APPROVAL OF PLANS FOR BRIDGE ERECTION, DEMOLITION AND OTHER CRANE/ HOISTING OPERATIONS OVER RAILROAD RIGHT-OF-WAY. . . . . .E7 - 8

01520A REQUIREMENTS FOR TEMPORARY PROTECTION SHIELDS FOR DEMOLITION AND CONSTRUCTION OF OVERHEAD BRIDGES AND OTHER STRUCTURES. . . . . .E9 - 11

02261A REQUIREMENTS FOR TEMPORARY SHEETING AND SHORING TO SUPPORT AMTRAK TRACKS. . . . . E12 - 15

EP3016 STORM WATER DRAINAGE AND DISCHARGE FROM ADJACENT PROPERTY ONTO AMTRAK RIGHT-OF-WAY . . . . . E16 - 17

EP3005 PIPELINE OCCUPANCY . . . . . E18 - 43

QUALIFIED CONSULTANTS FOR ELECTRIFICATION DESIGN 2009-10. . . . . E44

AMTRAK SPECIFICATION – AED - 1. . . . . E45 - 55

AMTRAK SPECIFICATION – AED- 2. . . . . E56 - 75

C.E. 4 SPECIFICATIONS FOR WIRE, CONDUIT AND CABLE OCCUPATIONS OF NATIONAL RAILROAD PASSENGER CORPORATION PROPERTY . . . . . E76 - 88

CE565-A SPECIFICATION FOR NON-FERROUS RODS, BOLTS, TUBES, AND FORGINGS. . . . . E89 - 99

SCOPE AND NATURE

This practice provides procedures for Contractors to follow, when working on Amtrak Right-of-Way, adjacent to Amtrak tracks, to assure the protection of trains and maintenance of scheduled railroad operations.

SPECIAL REFERENCE

Note: This information was included under former Engineering Practice 1305.

Contractors shall comply with procedures detailed in the following specifications, when applicable:

Section	Title	Revision No.	Revision Date
01141A	Safety and Protection of Railroad Traffic and Property	3	02/03/06
01142A	Submission Documentation Required for Amtrak Review and Approval of Plans for Bridge Erection, Demolition and Other Crane/ Hoisting Operations over Railroad Right-of-Way	1	12/15/05
01520A	Requirements for Temporary Protection Shields for Demolition and Construction of Overhead Bridges and Other Structures	1	08/07/01
02261A	Requirements for Temporary Sheeting and Shoring to Support Amtrak Tracks	2	08/07/01

SPECIAL MATERIALS

Not Applicable

PROCEDURE

1. The Contractor shall conform to the applicable specifications.

2. Amtrak I&C shall assure that agencies and other third parties proposing construction on or adjacent to Amtrak Right-of-Way conform to Amtrak requirements detailed herein.

3. Amtrak Design and Construction shall review the Contractor's proposed design and construction procedures for conformance with specifications, with sound engineering design practice and with the procedures detailed in the applicable Engineering Practice documents.

4. Amtrak Construction shall monitor the activities of the Contractor on-site to assure compliance/ adherence to approved procedures throughout the construction period.

REPORTING

As detailed in the specifications.

RESPONSIBILITY

Amtrak I&C Staff	Comply with Procedure
Director Project Initiation & Development	Assure Compliance
Amtrak Design Staff	Comply with Procedure
Director Structures Design	Assure Compliance
Amtrak Construction Staff	Comply with Procedure
Deputy Chief Engineer Construction	Assure compliance

SECTION 01141A – SAFETY AND PROTECTION OF RAILROAD TRAFFIC AND PROPERTY

PART 1 - GENERAL

1.1 SCOPE

A. This specification describes the safety procedures and protection provisions for Contractors and Permittees entering and working upon railroad property.

B. Use of this specification is as required by Amtrak, as described in Amtrak Engineering Practice EP3014.

1.2 RELATED DOCUMENTS

A. Drawings and general provisions of the Contract, including General and Supplementary Conditions and other Division 1 Specification Sections, apply to this Section.

1.3 DEFINITIONS

A. CHIEF ENGINEER: Amtrak Chief Engineer

B. RAILROAD: National Railroad Passenger Corporation (Amtrak), and/or the duly authorized representative

C. ENGINEERING PRACTICE: Amtrak Engineering Practices establish a system of uniform practices, notices and instructions for the Amtrak Engineering Department, providing current, permanent and temporary, departmental procedures and policies.

PART 2 - PRODUCTS (Not Used)

PART 3 - EXECUTION

3.1 PRE-ENTRY MEETING

A. Before entry of Permittee and/or Contractors onto Railroad's property, a pre-entry meeting shall be held at which time Permittee and/or Contractors shall submit for written approval of the Chief Engineer, plans, computations and a detailed description of proposed methods for accomplishing the work, including methods for protecting Railroad's traffic. Any such written approval shall not relieve Permittee and/or Contractor of their complete responsibility for the adequacy and safety of their operations.

3.2 RULES, REGULATIONS AND REQUIREMENTS

A. Railroad traffic shall be maintained at all times with safety and continuity, and Permittee and/or Contractors shall conduct their operations in compliance with all rules, regulations, and requirements of Railroad (including these Specifications) with respect to any work performed on, over, under, within or adjacent to Railroad's property. Permittee and/or Contractors shall be responsible for acquainting themselves with such rules, regulations and requirements. Any violation of Railroads safety rules, regulations, or requirements shall be grounds for the immediate suspension of the Permittee and/or Contractor work, and the re-training of all personnel, at the Permittee's expense.

3.3 MAINTENANCE OF SAFE CONDITIONS

A. If tracks or other property of Railroad are endangered during the work, Permittee and/or Contractor shall immediately take such steps as may be directed by Railroad to restore safe conditions, and upon failure of Permittee and/or Contractor to immediately carry out such direction, Railroad may take whatever steps are reasonably necessary to restore safe conditions. All costs and expenses of restoring safe conditions, and of repairing any damage to Railroad's trains, tracks, right-of-way or other property caused by the operations of Permittee and/or Contractors, shall be paid by Permittee.

3.4 PROTECTION IN GENERAL

A. Permittee and/or Contractors shall consult with the Chief Engineer to determine the type and extent of protection required to insure safety and continuity of railroad traffic. Any Inspectors, Track Foremen, Track Watchmen, Flagman, Signalmen, Electric Traction Linemen, or other employees deemed necessary by Railroad, at its sole discretion, for protective services shall be obtained from Railroad by Permittee and/or Contractors. The cost of same shall be paid directly to Railroad by Permittee. The provision of such employees by Railroad, and any other precautionary measures taken by Railroad, shall not relieve Permittee and/or Contractors from their complete responsibility for the adequacy and safety of their operations.

3.5 PROTECTION FOR WORK NEAR ELECTRIFIED TRACK OR WIRE

A. Whenever work is performed in the vicinity of electrified tracks and/or high voltage wires, particular care must be exercised, and Railroad's requirements regarding clearance to be maintained between equipment and tracks and/or energized wires, and otherwise regarding work in the vicinity of electrified tracks, must be strictly observed. No employees or equipment will be permitted to work near overhead wires, except when protected by a Class A employee of Railroad. **Permittee and/or Contractors must supply an adequate length of grounding cable (4/0 copper with approved clamps) for each piece of equipment working near or adjacent to any overhead wire**.

3.6 FOULING OF TRACK OR WIRE

A. No work will be permitted within twenty-five (25) feet of the centerline of track or the energized wire or have potential of getting within twenty-five (25) feet of track wire without the approval of the Chief Engineer's representative. Permittee and/or Contractors shall conduct their work so that no part of any equipment or material shall foul an active track or overhead

wire without the written permission of the Chief Engineer's representative. When Permittee and/or Contractors desire to foul an active track, they must provide the Chief Engineer's representative with their site-specific work plan a minimum of twenty-one (21) working days in advance, so that, if approved, arrangements may be made for proper protection of Railroad. Any equipment shall be considered to be fouling a track or overhead wire when located (a) within fifteen (15) feet from the centerline of the track or within fifteen (15) feet from the wire, or (b) in such a position that failure of same, with or without a load, would bring it within fifteen (15) feet from the centerline of the track or within fifteen (15) feet from the wire and requires the presence of the proper Railroad protection personnel.

B. If acceptable to the Chief Engineer's representative, a safety barrier (approved temporary fence or barricade) may be installed at fifteen (15) feet from centerline of track or overhead wire to afford the Permittee and/or Contractor with a work area that is not considered fouling. Nevertheless, protection personnel may be required at the discretion of the Chief Engineer's representative.

3.7 TRACK OUTAGES

A. Permittee and/or Contractors shall verify the time and schedule of track outages from Railroad before scheduling any of their work on, over, under, within, or adjacent to Railroad's right-of-way. Railroad does not guarantee the availability of any track outage at any particular time. Permittee and/or Contractors shall schedule all work to be performed in such a manner as not to interfere with Railroad operations. Permittee and/or Contractors shall use all necessary care and precaution to avoid accidents, delay or interference with Railroad's trains or other property.

3.8 DEMOLITION

A. During any demolition, the Contractor must provide horizontal and vertical shields, designed by a Professional Engineer registered in the state in which the work takes place. These shields shall be designed in accordance with the Railroad's specifications and approved by the Railroad, so as to prevent any debris from falling onto the Railroad's right-of-way or other property. A grounded temporary vertical protective barrier must be provided if an existing vertical protective barrier is removed during demolition. In addition, if any openings are left in an existing bridge deck, a protective fence must be erected at both ends of the bridge to prohibit unauthorized persons from entering onto the bridge.

B. Ballasted track structure shall be kept free of all construction and demolition debris. Geo-textiles or canvas shall be placed over the track ties and ballast to keep the ballast clean.

3.9 EQUIPMENT CONDITION

A. All equipment to be used in the vicinity of operating tracks shall be in "certified" first-class condition so as to prevent failures that might cause delay to trains or damage to Railroad's property. No equipment shall be placed or put into operation near or adjacent to operating tracks without first obtaining permission from the Chief Engineer's representative. **Under no circumstances shall any equipment or materials be placed or stored within twenty-five (25) feet from the centerline of an outside track, except as approved by the Site Specific**

Safety Work Plan. To insure compliance with this requirement, Permittee and/or Contractors **must establish a twenty-five (25) foot foul line prior to the start of work** by either driving stakes, taping off or erecting a temporary fence, or providing an alternate method as approved by the Chief Engineer's representative. Permittee and/or Contractors will be issued warning stickers which must be placed in the operating cabs of all equipment as a constant reminder of the twenty-five (25) foot clearance envelope.

3.10 STORAGE OF MATERIALS AND EQUIPMENT

A. No material or equipment shall be stored on Railroad's property without first having obtained permission from the Chief Engineer. Any such storage will be on the condition that Railroad will not be liable for loss of or damage to such materials or equipment from any cause.

B. If permission is granted for the storage of compressed gas cylinders on Railroad property, they shall be stored a minimum of 25 feet from the nearest track in an approved lockable enclosure. The enclosure shall be locked when the Permittee and/or Contractor is not on the project site.

3.11 CONDITION OF RAILROAD'S PROPERTY

A. Permittee and/or Contractors shall keep Railroad's property clear of all refuse and debris from its operations. Upon completion of the work, Permittee and/or Contractors shall remove from Railroad's property all machinery, equipment, surplus materials, falsework, rubbish, temporary structures, and other property of the Permittee and/or Contractors and shall leave Railroad's property in a condition satisfactory to the Chief Engineer.

3.12 SAFETY TRAINING

A. All individuals, including representatives and employees of the Permittee and/or Contractors, before entering onto Railroad's property or coming within twenty-five (25) feet of the centerline of the track or energized wire shall first attend Railroad's Safety Contractor/Leasee Employee Training Class. The Safety Orientation Class will be provided by Railroad's Safety Representative at Permittee's expense. A photo I.D. will be issued and must be worn/displayed while on Railroad property. All costs of complying with Railroad's safety training shall be at the sole expense of Permittee. Permittee and/or Contractors shall appoint a qualified person as their Safety Representative. The Safety Representative shall continuously assure that all individuals comply with Railroad's safety requirements. All safety training records shall be maintained with site specific work plan.

3.13 NO CHARGES TO RAILROAD

A. It is expressly understood that neither these Specifications, nor any document to which they are attached, include any work for which Railroad is to be billed by Permittee and/or Contractors, unless Railroad gives a written request that such work be performed at Railroad's expense.

END OF SECTION 01141A

SECTION 01142A – SUBMISSION DOCUMENTATION REQUIRED FOR AMTRAK REVIEW AND APPROVAL OF PLANS FOR BRIDGE ERECTION, DEMOLITION AND OTHER CRANE/ HOISTING OPERATIONS OVER RAILROAD RIGHT-OF-WAY

PART 1 - GENERAL

1.1 SCOPE

A. Amtrak requires that a site-specific work plan for accomplishing hoisting operations be prepared for every applicable project, and for each type of lift on a project.
   1. The plan shall demonstrate adherence to Amtrak safety rules.
   2. The plan shall demonstrate constructibility.
   3. The plan shall minimize impact to rail operations.
   4. The approved plan will provide the basis for field inspection/ verification of the actual work.

B. Preparation, review and approval of the Crane/ Hoisting site-specific work plan does not relieve the Contractor from meeting other Amtrak requirements for adequate planning and documentation of proposed work procedures within the Right-of-Way of the railroad..

C. Current Amtrak safety rules shall be adhered to in every respect.

D. Use of this specification is as required by Amtrak, as described in Amtrak Engineering Practice EP3014.

1.2 RELATED DOCUMENTS

A. Drawings and general provisions of the Contract, including General and Supplementary Conditions and other Division 1 Specification Sections, apply to this Section.

1.3 DEFINITIONS

A. CHIEF ENGINEER: Amtrak Vice President, Chief Engineer

B. RAILROAD: National Railroad Passenger Corporation (Amtrak), and/or the duly authorized representative

C. ENGINEERING PRACTICE: Amtrak Engineering Practices establish a system of uniform practices, notices and instructions for the Amtrak Engineering Department, providing current, permanent and temporary, departmental procedures and policies.

1.4 SUBMISSION REQUIREMENTS

A. Unless otherwise directed in the Contract, the Contractor shall submit five sets of plans and calculations to the authorized representative of the Chief Engineer, Structures, whose name and address will be provided at the project pre-construction meeting.

B. Submitted calculations and plans shall be signed and sealed by a Professional Engineer, registered in the State in which the work will be performed.

C. The Contractor shall revise and resubmit plans and calculations as many times as necessary, until a complete and correct site-specific work plan for crane/ hoisting operations has been approved.

PART 2 - PRODUCTS (Not Used)

PART 3 - EXECUTION

3.1 THE CONTRACTOR SHALL PROVIDE, AT A MINIMUM, THE FOLLOWING INFORMATION FOR REVIEW AND APPROVAL BY AMTRAK ENGINEERING STRUCTURES:

A. Plan view showing location(s) of cranes, operating radii, with delivery and/or disposal locations shown. Provide all necessary dimensions for locating the elements of the plan.

B. Plans and computations showing the weight of the pick.

C. Crane rating sheets, demonstrating that cranes are adequate for 150% of the calculated pick weight. That is, the cranes shall be capable of picking 150% of the load, while maintaining normal, recommended factors of safety. The adequacy of the crane for the proposed pick shall be determined by using the manufacturer's published crane rating chart and not the maximum crane capacity. Crane and boom nomenclature is to be indicated.

D. Calculations demonstrating that slings, shackles, lifting beams, etc. are adequate for 150% of the calculated pick weight.

E. Location plan showing obstructions, indicating that the proposed swing is possible. "Walking" of load using two cranes will not be permitted. Rather, multiple picks and repositioning of the crane may be permitted to get the load to the needed location for the final pick, if necessary.

F. Data sheet listing types and sizes of slings and other connecting equipment. Include copies of catalog cuts for specialized equipment. Detail attachment methods on the plans.

G. A complete procedure, indicating the order of lifts and any repositioning or re-hitching of the crane or cranes.

H. Temporary support of any components or intermediate stages, as may be required.

I. A time schedule of the various stages, as well as a schedule for the entire lifting process.

END OF SECTION 01142A

SECTION 01520A – REQUIREMENTS FOR TEMPORARY PROTECTION SHIELDS FOR DEMOLITION AND CONSTRUCTION OF OVERHEAD BRIDGES AND OTHER STRUCTURES

PART 1 - GENERAL

1.1 SCOPE

A. This engineering practice describes items to be included in the design and construction of temporary protection shields for construction overhead and near to Amtrak tracks.

B. Use of this specification is as required by Amtrak, as described in Amtrak Engineering Practice EP3014.

1.2 RELATED DOCUMENTS

A. Drawings and general provisions of the Contract, including General and Supplementary Conditions and other Division 1 Specification Sections, apply to this Section.

1.3 DEFINITIONS

A. CHIEF ENGINEER: Amtrak Vice President, Chief Engineer

B. RAILROAD: National Railroad Passenger Corporation (Amtrak), and/or the duly authorized representative

C. ENGINEERING PRACTICE: Amtrak Engineering Practices establish a system of uniform practices, notices and instructions for the Amtrak Engineering Department, providing current, permanent and temporary, departmental procedures and policies.

1.4 SUBMISSION REQUIREMENTS

A. Unless otherwise directed in the Contract, the Contractor shall submit five sets of plans and calculations to the authorized representative of the Chief Engineer, Structures, whose name and address will be provided at the project pre-construction meeting.

B. Submitted calculations and plans shall be signed and sealed by a Professional Engineer, registered in the State in which the work will be performed.

C. The Contractor shall revise and resubmit plans and calculations as many times as necessary, until a complete and correct site-specific work plan for crane/ hoisting operations has been approved.

PART 2 - PRODUCTS (Not Used)

PART 3 - EXECUTION

3.1 CONTRACTORS WORKING ON OVERHEAD OR NEARBY DEMOLITION AND/OR CONSTRUCTION ADJACENT TO AMTRAK TRACKS, SHALL CONFORM TO THE FOLLOWING

DESIGN AND CONSTRUCTION REQUIREMENTS FOR TEMPORARY PROTECTION SHIELDING:

A. The Contractor shall maintain a specified level of protection to railroad facilities, during demolition and construction activities that occur overhead and nearby Amtrak tracks, as shown on the Contract Plans, as detailed in the Contract Specifications, and as described below.

B. Prior to the start of construction, the Contractor shall submit to Amtrak for review and approval, detailed, site specific plans for temporary protection shields. The plans will be reviewed as to the methods of erection, and as to whether or not the proposed installation will provide the required level of protection. No construction shall proceed until the Contractor has received written approval of the Contractor's complete, site specific plans, from Amtrak.

C. The Contractor shall design the protection shields to conform to all applicable and governing federal, state and local laws and regulations.

D. Drawings for the proposed temporary protection shields shall be signed and sealed by a Licensed Professional Engineer. Complete design calculations, clearly referenced to the drawings, and easy to review, shall be provided with submission of drawings.

E. Protection shields shall be designed for the following, minimum load and size criteria.
   1. The horizontal shield design liveload on horizontal surfaces shall be the greater of a minimum of 100 pounds per square foot (psf) [5000 Pascals] or the anticipated liveload to be produced by the Contractor's anticipated operations. When determining the appropriate design live load, the designer shall consider factors such as the physical capacity of proposed debris-catching platforms to retain materials, and the type of equipment the platforms might support. Positive means of demolition and construction controls shall be provided to assure that debris that may collect on the shield will not exceed the design live load. The horizontal protection shield, in plan view, shall cover no less than the area directly over the tracks plus ten feet minimum beyond the centerline of the outermost tracks.
   2. The vertical shield shall be designed to carry a minimum 30 psf [1500 Pascals] allowance for wind load. The vertical shield shall extend a minimum of 6'-6" [1950 millimeters] above the top of the adjacent surface, such as curb or sidewalk. Anti-climb wings shall be installed at each end, as necessary, to restrict access to the railroad property.

F. The vertical and horizontal clearance envelopes required for maintenance of railroad operations, shall be indicated on the site specific work plans. These clearances are subject to review and approval by Amtrak. If applicable, both temporary and permanent envelopes shall be indicated on the plans. The temporary protection shields shall be installed outside the limits of these minimum vertical and horizontal clearances shown on the site specific work plans.

G. In electrified territory, temporary protection shields shall be bonded and grounded.

H. Temporary protection shields shall be designed and constructed to prevent dust, debris, concrete, formwork, paint, tools, or anything else from falling onto the railroad property below.

I. The temporary protection shields shall be attached to the structure in accordance with site specific work plans submitted by the Contractor and approved by Amtrak. Drilling in structural members and welding will generally not be permitted in members that are scheduled to remain in place in the reconstructed structure. For existing members scheduled for demolition or for later reconstruction, any proposed attachment shall be designed with consideration of potential existing, deteriorated conditions.

J. The Contractor shall provide the Amtrak on-site representative, for review and approval prior to any construction activity in the effected area, a proposed construction schedule for the installation, maintenance and removal of the temporary protection shields.

K. The temporary protection shields shall be installed prior to the start of any other work over the railroad in the effected areas. No construction shall proceed until the Amtrak on-site representative reviews and approves the Contractor's installed protection. Before proceeding with the work, Amtrak must be satisfied, in its sole judgment, that sufficient protection has been provided to proceed with the work.

L. The Contractor shall install and remove temporary protection shields only when an Amtrak representative is on-site.

M. The Contractor shall not install or remove temporary protection shields during train operations.

N. Temporary protection shields shall remain in place for the duration of construction activities over and nearby the railroad in the effected areas. The Contractor may remove temporary construction only after approved by Amtrak on-site representatives.

O. Where site specific conditions impose insurmountable restrictions to the design of temporary construction conforming to the limitations listed above, the design of temporary construction shall be developed in close coordination with Amtrak design review personnel. The Chief Engineer, Structures shall provide final approval of temporary construction that does not conform to the above limitations.

END OF SECTION 01520A

SECTION 02261A – REQUIREMENTS FOR TEMPORARY SHEETING AND SHORING TO SUPPORT AMTRAK TRACKS

PART 1 - GENERAL

1.1 SCOPE

A. This engineering practice describes items to be included in the design and construction of temporary sheeting and shoring construction adjacent and proximate to Amtrak tracks.

B. Use of this specification is as required by Amtrak, as described in Amtrak Engineering Practice EP3014.

1.2 RELATED DOCUMENTS

A. Drawings and general provisions of the Contract, including General and Supplementary Conditions and other Division 1 Specification Sections, apply to this Section.

1.3 DEFINITIONS

A. CHIEF ENGINEER: Amtrak Vice President, Chief Engineer

B. RAILROAD: National Railroad Passenger Corporation (Amtrak), and/or the duly authorized representative

C. ENGINEERING PRACTICE: Amtrak Engineering Practices establish a system of uniform practices, notices and instructions for the Amtrak Engineering Department, providing current, permanent and temporary, departmental procedures and policies.

1.4 SUBMISSION REQUIREMENTS

A. Unless otherwise directed in the Contract, the Contractor shall submit five sets of plans and calculations to the authorized representative of the Chief Engineer, Structures, whose name and address will be provided at the project pre-construction meeting.

B. Submitted calculations and plans shall be signed and sealed by a Professional Engineer, registered in the State in which the work will be performed.

C. The Contractor shall revise and resubmit plans and calculations as many times as necessary, until a complete and correct site-specific work plan for crane/ hoisting operations has been approved.

PART 2 - PRODUCTS (Not Used)

PART 3 - EXECUTION

3.1 CONTRACTORS INSTALLING TEMPORARY CONSTRUCTION SHEETING AND SHORING TO SUPPORT AMTRAK TRACKS SHALL CONFORM TO THE FOLLOWING:

A. Footings for all piers, columns, walls, or other facilities shall be located and designed so that any temporary sheeting and shoring for support of adjacent track or tracks during construction, will not be closer than toe of ballast slope. The dimension from gage of rail to toe of ballast, along tangent track, is 7'-5"; see dimensions on Track standard plans for curved track dimensions.

B. USE OF SHEETING: When support of track or tracks is necessary during construction of the above-mentioned facilities, interlocking steel sheeting, adequately braced and designed to carry Cooper E80 live-load plus 50 percent impact allowance is required. Soldier piles and lagging will be permitted for track support ONLY when required penetration of steel sheet piling cannot be obtained, due to site-specific conditions that make steel sheet piling placement impracticable, in the opinion of the authorized, Amtrak design review engineer.
   1. For usual soil conditions and limited excavations, sheeting is required when the near-track excavation extends beneath or nearer to the track than the Theoretical Railroad Embankment Line. The Theoretical Railroad Embankment Line is defined as a line that starts at grade, ten foot from the centerline of the outer track, and extends downward, away from the track, at a slope of 1-1/2 horizontal to one vertical.
   2. For special soil conditions, such as soft organic soils and rock conditions, and for unusual excavation conditions, temporary supports for excavations may be necessary even when the limits fall beyond the Theoretical Railroad Embankment Line, requiring site specific analysis by a professional, geotechnical engineer.
   3. See Sketch SK-1, "Normal Requirements for Sheet Piling Adjacent to Tracks".

C. Exploratory trenches, three feet deep and 15 inches wide in the form of an "H", with outside dimensions matching the proposed outside dimensions of sheeting, shall be hand dug, prior to placing and driving the sheeting, in any area where railroad or utility underground installations are known or suspected. These trenches are for exploratory purposes only, and shall be backfilled and immediately compacted, in layers. This work shall be performed only in the presence of a railroad inspector.

D. Absolute use of track is required while driving sheeting adjacent to running track. Track usage shall be prearranged per standard procedures, through the Amtrak project representative.

E. Cavities adjacent to sheet piling, created by pile driving, shall be filled with sand, and any disturbed ballast shall be restored and tamped immediately.

F. Sheet piling cutoffs
   1. During construction, sheeting shall be cut off at an elevation no higher than the top of tie.
   2. At the completion of construction activities involving the use of sheet piling, sheet piling may be pulled if there will be no adverse impact to the railroad track support bed, as determined by the Amtrak site engineer. This will generally be permitted when both of these conditions are met:
      a. the sheeting face is at least ten feet distant from the centerline of track, and
      b. the bottom of the excavation that the sheeting supported prior to backfilling, does not fall within an assumed influence zone under the tracks. The assumed influence

zone is defined as the area, as seen in cross-sectional view, falling beneath the Theoretical Underground Track Disturbance Line. This line is defined as a line that starts at the end and bottom of the ties, and extends from the track outward and downward at a one-to-one (45-degree) slope.

3. Sheet piling that is to be left in-place, shall be cut off below the ground line
   a. at least eighteen inches below final ground line at the sheeting, and
   b. no higher than 24 inches below the elevation of the bottom of the nearest ties
4. See Sketch SK-1, "Normal Requirements for Sheet Piling Adjacent to Tracks".

G. The excavation adjacent to the track shall be covered, ramped and protected by handrails, barricades and warning lights, as required by applicable safety regulations, and as directed by Amtrak.

H. Final backfilling of excavation shall conform to project specifications.

I. The Contractor shall provide Amtrak with a detailed schedule of proposed construction operations, detailing each step of the proposed temporary construction operations in proximity to Amtrak tracks, so that Amtrak may review and approve the proposed operations, and may properly inspect and monitor operations.

J. Drawings for the proposed temporary sheeting and shoring shall be signed and sealed by a Licensed Professional Engineer. Complete design calculations, clearly referenced to the drawings, and easy to review, shall be provided with submission of drawings.

K. Where site specific conditions impose insurmountable restrictions to the design of temporary construction conforming to the limitations listed above, the design of temporary construction shall be developed in close coordination with Amtrak design review personnel. The Chief Engineer, Structures shall provide final approval of temporary construction that does not conform to the above limitations.
   1. When Amtrak grants approval for sheeting closer than standard minimum clearances, the Contractor shall develop a survey plan, if not already required by the project, for the adjacent tracks, to be conducted prior to, during, and after the temporary sheeting construction operations. If settlement is detected, construction operations shall be suspended until the track has been returned to its initial condition, and stabilized, as determined by the Amtrak project site representative.
   2. The Contractor shall stockpile ten (10) tons of approved ballast at the project site, and maintain that amount in ready reserve, to allow for the possible need to restore track profile.

L. Particular care shall be taken in the planning, design and execution of temporary construction, as relates to railroad slope protection and drainage facilities. Erosion and sediment control best management practices shall be designed and employed, as approved by Amtrak. Any unintended disruption to railroad drainage facilities, caused by the temporary construction, shall be promptly remedied, as directed by the Engineer, solely at the Contractor's cost.

M. The following Information Sketch is attached:

   1. Figure No. SK-1: Normal Requirements for Sheet Piling Adjacent to Track

END OF SECTION 02261A

LEGEND

ZONE 1 – ABOVE AND OUTSIDE THE THEORETICAL RAILROAD EMBANKMENT LINE.

ZONE 2 – FARTHER THAN 10 FEET FROM THE CENTERLINE OF TRACK, BELOW THE THEORETICAL RAILROAD EMBANKMENT LINE AND ABOVE THE THEORETICAL UNDERGROUND TRACK DISTURBANCE LINE.

ZONE 3 – BELOW AND INSIDE OF THE THEORETICAL UNDERGROUND TRACK DISTURBANCE LINE.

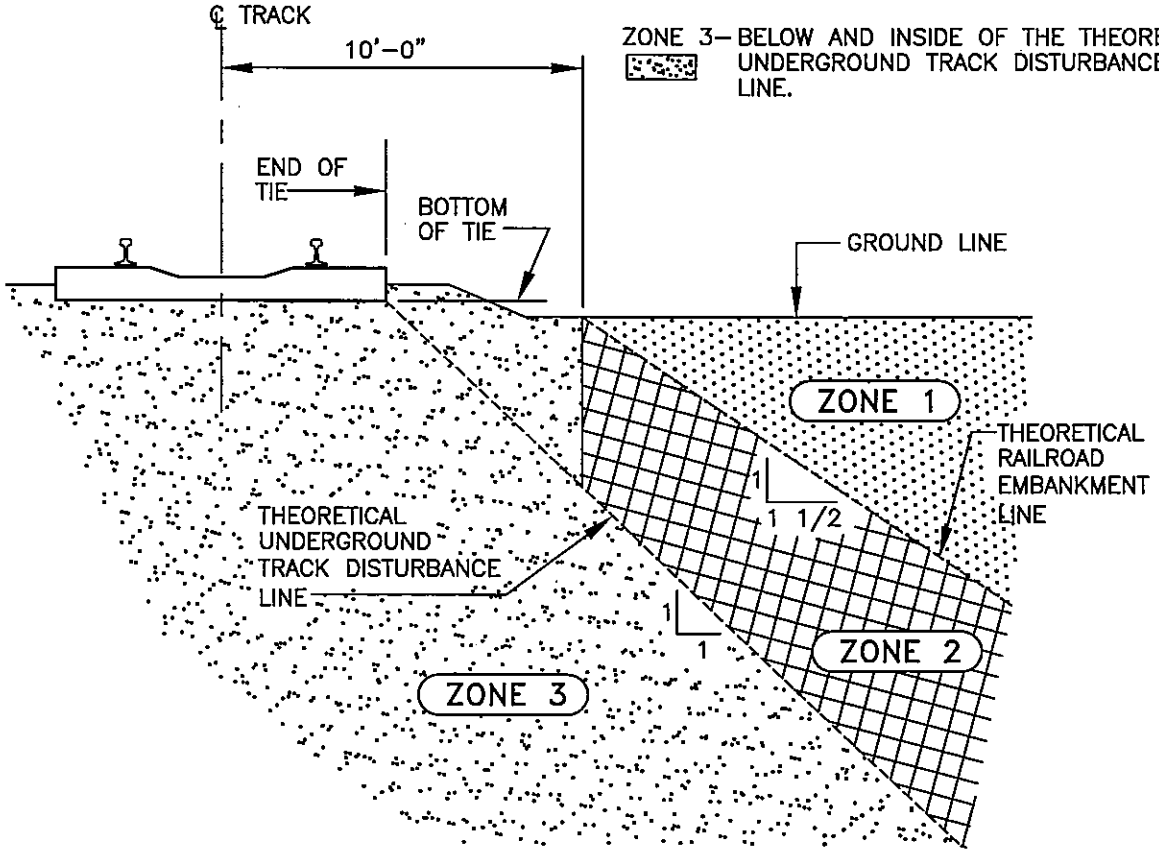

NORMAL REQUIREMENTS FOR SHEET PILING ADJACENT TO TRACK

1. EXCAVATIONS WITHIN ZONE 1 – ABOVE AND OUTSIDE OF THE THEORETICAL RAILROAD EMBANKMENT LINE – DO NOT NORMALLY REQUIRE SHEETING TO PROTECT RAILROAD ROAD BED. SHEETING MAY BE REQUIRED FOR OTHER REASONS.
2. EXCAVATIONS WHOSE BOTTOMS EXTEND INTO ZONE 2 REQUIRE SHEETING, BUT THE SHEETING MAY NORMALLY BE PULLED AFTER THE EXCAVATION HAS BEEN BACKFILLED.
3. EXCAVATIONS WHOSE BOTTOMS EXTEND INTO ZONE 3 WILL NORMALLY REQUIRE THE SHEETING TO BE LEFT IN PLACE AND CUT–OFF PER REQUIREMENTS.

Amtrak®

This material is owned by and is the sole and exclusive property of the National Railroad Passenger Corporation (Amtrak), Office of Engineering, and is supplied on a confidential basis solely for use in connection with the design and construction of Amtrak facilities and equipment. The reproduction, display, sale or other disposition of this document without the express written consent of the National Railroad Passenger Corporation, Office of Engineering, is prohibited.

Office of Chief Engineer
STRUCTURES
National Railroad Passenger Corporation
30th Street Station, Philadelphia, Pennsylvania 19104

SKETCH 1
SPEC. 02261A – REV. 1

File No:	
Design No:	3501
Sheet No.	1 of 1
Dwg. No.	SK–1

Designed CJR | Drawn JLM | Date 6/06/01

SCOPE AND NATURE

There are many areas along the railroad corridor that are receiving storm water from adjacent property that results in flooding during the smallest of storms. Increased storm water flow to the railroad property increases deposits of excessive amounts of sedimentation and could cause fouling of the track structure. With the introduction of the High Speed Rail Trains, passenger safety is of the utmost importance. Diminished track support from flooding and sedimentation will not be allowed.

It is Amtrak's policy to limit the resultant discharge and drainage of storm water from the development of adjacent properties to no more than pre-existing conditions, as demonstrated by engineering analyses through governmental regulatory processes.

It is Amtrak's policy to protect the railroad right-of-way from sediment, erosion and excess runoff during all stages of construction activities on adjacent properties, as demonstrated by engineering analyses through governmental regulatory processes.

SPECIAL REFERENCE

The following policy is to augment Specification 02861 of EP3005, Pipeline Occupancy Requirements and Specifications, and other Amtrak I&C, design and construction standards.

SPECIAL MATERIALS

N/A

PROCEDURE

The discharge of storm water onto railroad property will be prohibited for all construction projects on or adjacent to Railroad property, unless the applicant can demonstrate that there will be a "zero net runoff" result in the peak flow and total volume based on a 100 Year Storm event, <u>and</u> that receiving waters downstream will not be impacted.

Computations indicating this design and suitable topographic plans, prepared by a Professional Engineer, licensed in the state in which the work will be performed, shall be submitted to the Chief Engineer for approval at least 60 days in advance of construction. If the drainage is to discharge into an existing drainage channel on or under the Railroad Right of Way, a hydraulic analysis of the existing structures must be included.

Formal approval of the proposed design, by the appropriate governmental agency or agencies, must be submitted with the computations. Control of soil erosion and sedimentation must be demonstrated on the design plans in accordance with the appropriate state and local regulations.

The Contractor shall be responsible for control of the site and protection of railroad property during the entire construction project, through completion. The design of sedimentation, erosion and runoff control during construction shall accommodate conditions of every phase of construction.

Review, monitoring and approval process:

1. The Contractor shall conform to this Amtrak policy, and demonstrate conformance by standard Amtrak review submissions and approvals, as noted above.

2. Amtrak I&C shall assure that agencies and other third parties proposing construction on or adjacent to Amtrak Right-of-Way conform to Amtrak policy detailed herein.

3. Amtrak Design and Construction shall review the Contractor's proposed design and construction procedures for conformance with Amtrak policy, as demonstrated through appropriate engineering analyses and the government regulatory process.

4. Amtrak Construction shall monitor the activities of the Contractor on-site to assure compliance/ adherence to approved procedures throughout the construction period.

REPORTING

N/A

RESPONSIBILITY

Amtrak I&C Staff	Comply with Procedure
Director I&C	Assure Compliance
Amtrak Design Staff	Comply with Procedure
Director Structures Design	Assure Compliance
Amtrak Construction Staff	Comply with Procedure
Sr. Director Construction	Assure compliance

Amtrak® ENGINEERING PRACTICES	ORIGINAL ISSUE DATE 07/18/02		NUMBER
	REVISED DATE 10/30/02		EP3005
TITLE PIPELINE OCCUPANCY	RECOMMENDED by *K.L. Kulick*	DATE 10/25/02	PAGE 1 OF 2
	APPROVED by CHIEF ENGR, STRUCTURES *James S. Richter*	DATE 10/25/02	

SCOPE AND NATURE

To provide design and construction specifications for pipelines within Amtrak right-of-way.

SPECIAL REFERENCES

Note: The former number for this Engineering Practice was 1604.

ANSI Standards

ASTM Standards

AWS Standards

AWWA Standards

Engineering Practice 3014 Section 02261A

Engineering Practice 3014 Section 01142A

National Electric Code

National Electric and Safety Code

NACE Standards

AREMA Manual for Railway Engineering

OSHA Standards

SPECIAL MATERIALS

N/A

PROCEDURE

As provided in the Specification – Section 02081 – Pipeline Occupancy

REPORTING

As detailed in specification.

RESPONSIBILITY

Amtrak I&C Staff	Comply with Procedure
Director I&C	Assure Compliance
Amtrak Design Staff	Comply with Procedure
Amtrak Construction Staff	Comply with Procedure
Sr. Director Construction	Assure Compliance
Division Engineer	Comply with Procedure
Real Estate Department	Distribute Specification to Applicants

EP 3005- PIPELINE OCCUPANCY- SPECIFICATION 02081A

TABLE OF CONTENTS

02081A — PIPELINE OCCUPANCY
Part 1 – General 2
1.1 – Scope and Nature 2
1.2 – Application for Occupancy 2
1.3 – Submissions of Plans and Documentation 2
1.4 – Permit Approval – Notification to Proceed 4
1.5 – Modification of Existing Facilities 4
1.6 – Abandoned Pipelines and/or Facilities 4
1.7 – Conflict of Specifications 4
1.8 – Definitions 4
1.9 – Publication Standards 5
Part 2 – Technical Requirements 6
2.1 – Location of Pipeline on the Right-of-Way 6
2.2 – Carrier Pipe 6
2.3 – Casing Pipe 7
2.4 – Design Criteria 8
2.5 – Signs 10
2.6 – Emergency Shut-Off Valves 10
2.7 – Depth of Pipeline Installation 10
2.8 – Cathodic Protection 10
2.9 – Soil Investigation 11
Part 3 – Construction 12
3.1 – Construction Inspection Requirements 12
3.2 – Installation Methods 12
3.3 – Construction Operations 14
3.4 – Support of Tracks 15
3.5 – Pipelines in Roadways Under Bridges 16
3.6 – Pipelines on Bridges 16
3.7 – Bonding and Grounding of Pipelines on Bridges in Electrified Territory 16
3.8 – Drainage 16
3.9– Inspection and Testing Requirements for Hazardous Materials 16
Part 4 – Information Sketches 18
Sketch 1 19
Sketch 2 20
Sketch 3 21
Sketch 4 22
Sketch 5 23
Sketch 6 24

PART 1 – GENERAL

1.1 SCOPE AND NATURE

These specifications apply to the design, construction and maintenance of pipelines and casings carrying flammable and non-flammable substances, or containing wires and cables, under, over, across and longitudinally along Amtrak property, right-of-way and facilities.

It is to be clearly understood that Amtrak owns its right-of-way for the primary purpose of operating a railroad. All occupancies shall therefore be designed and constructed so that operations and facilities are not interfered with, interrupted or endangered. In addition, the proposed facility shall be located to minimize encumbrance to the right-of-way so that the railroad will have unrestricted use of its property for current and future operations.

1.2 APPLICATION FOR OCCUPANCY

Individuals, Owners, Corporations and Municipalities (hereinafter known as the Applicant) desiring pipeline occupancy on Amtrak property must agree, upon approval of the construction plans by Amtrak, to execute an appropriate License Agreement and pay any required fees and/or rentals outlined therein.

Application for a License Agreement shall be made by letter addressed to Pipe and Wire Agreements, Real Estate Department – National Railroad Passenger Corporation, 30th Street Station, Box 25, Philadelphia, PA 19104. The application must provide the following information:

1. Name of Applicant desiring the occupancy.
2. Complete mailing address of Applicant.
3. Name and title of person who will sign the License Agreement.
4. The State in which the Applicant is incorporated.
5. Complete description of the project, including installation, location and specific details of the occupancy.

No entry upon Amtrak property for the purpose of conducting surveys, field inspections, obtaining soil information, or for any other purpose required for the design and engineering of the proposed occupancy, will be allowed without a Right of Entry Permit executed by Amtrak. The Applicant must apply for the Right-of-Entry Permit and pay any associated fees.

It is to be clearly understood that the issuance of a Right of Entry Permit does not constitute authority to proceed with the actual construction. Actual construction cannot begin until a formal License Agreement has been fully executed by Amtrak and authorization to proceed has been granted.

All persons entering Amtrak property must first attend an Amtrak safety orientation class.

1.3 SUBMISSION OF PLANS AND DOCUMENTATION

All License Agreement applications shall be accompanied by ten complete sets of all project construction plans, specifications and computations covering the proposed occupancy. The construction plans, specifications and computations shall be signed and sealed by a Registered Professional Engineer licensed in the state in which the work is to be performed. If the plans, specifications and computations (including those submitted by contractors or suppliers) are not signed and sealed, they will be given no further consideration.

All proposed pipeline occupancy submissions to Amtrak shall be accompanied by two full size sets and eight half size sets (11" x 17") of plans. The half size plans are to be folded to an 8½" x 11" size, with a 1½" margin on the left hand side and a 1" margin on the top, so that they can be secured at the upper left hand corner and still be unfolded to full size without being removed from the file. After folding, the title block or any other identification of the plans shall be visible at the lower right hand corner without the necessity of unfolding. Each plan shall bear an individual identifying number and an original issue date, together with subsequent revision dates. Revisions shall be clearly identified on the plans so that it is readily apparent as to what revisions were made and when. All plan sheets are to be folded individually and, where more than one plan is involved, the plan sheets shall be assembled into complete sets before submission to Amtrak. Upon completion of the project, as-built plans shall also be provided in an Adobe Acrobat CD ROM format.

Failure of the Applicant to comply with these requirements may be sufficient cause for rejection of the application.

Plans shall be drawn to scale, and a bar scale shall be provided. As a minimum, the following information shall be included:

1. Plan view of proposed pipeline in relation to all Amtrak facilities and facilities immediately adjacent to Amtrak, including, but not limited to, tracks, buildings, signals, pole lines, catenary pole foundations and guy anchors, other utilities and all other facilities that may affect or influence the pipeline design and construction. The right-of-way property line shall be clearly delineated (see Sketch 1).
2. Location of centerline of pipe (in feet) from the nearest railroad milepost or centerline of a railroad bridge (giving bridge milepost number). In all cases, the names of the municipality and the county in which the proposed facilities are located must be shown.
3. Profile of ground at centerline of pipe (from field survey) showing the relationship of the pipe and casing to ground level, tracks and other facilities (see Sketch 2). For longitudinal occupations, the profile of adjacent track or tracks must be shown (see Sketch 3). The location and description of benchmarks used in the field survey shall be given.
4. If the pipeline is in a public highway, the limits of the right-of-way for the highway shall be clearly indicated with dimensions from the centerline of the highway (see Sketches 1 & 4).
5. The angle of crossings in relation to the centerline of tracks.
6. Location and description of valves or control stations of the pipeline, or junction boxes and splice points for cable conduits, shall be clearly shown on the plans.
7. The Pipeline Crossing Data Sheet must be completed and shown on the plans submitted for approval (see Sketch 6).
8. Location and description of all appurtenances, manholes and other accesses shall be shown on the plans.

The plans must be specific as to:

9. Method of construction and installation.
10. Size and material of casing pipe, including any insulation or coatings proposed.
11. Size and material of carrier pipe, including any insulation or coatings proposed.

Location and dimensions of jacking, boring, or tunneling pits and of longitudinal pipeline trenches shall be shown, along with details of their sheeting and shoring. For usual soil conditions, if the bottom of the excavated pit nearest the adjacent track intersects a line drawn on a slope of 1½ horizontal to 1 vertical from a the bottom corner of a tie on the adjacent track, a temporary support of excavation system designed by a Registered Professional Engineer licensed in the State in which the work is to be performed shall be submitted for approval. For special soil conditions, a temporary support of excavation may be required for distances further from centerline of adjacent track. All temporary sheeting and shoring must comply with Amtrak Engineering Practice EP3014, Section 02261A, Requirements for Temporary, Sheeting and Shoring to Support Amtrak Tracks. In any event, the face of the pit shall be no less than 25' from adjacent track, unless otherwise approved by Amtrak. During construction, jacking, boring or tunneling, pits shall be fenced, lighted, and otherwise protected as directed by Amtrak designated field representative.

If required, a dewatering plan shall be included in the submission. The dewatering plan shall include the location and dimensions of system components, structural capacity of pits, etc., and all pertinent collection and discharge data.

When computer calculations are included with design calculations, the following minimum documentation shall be furnished:

1. A synopsis of the computer program(s), stating briefly: required input, method of solution, approximations used, specifications or codes used, cases considered, output generated, extent of previous usage or certification of program(s) and the name of the author of the program(s).

2. Identification by number, indexing and cross referencing of all calculation sheets, including supplemental "long-hand" calculations sheets.

3. Fully identified, dimensioned and annotated diagram of each member of the structure being considered.

4. Clear identification and printing of all input and output values, including intermediate values, if such values are necessary for orderly review.

5. Identification of the processing unit, input/output devices, storage requirements, etc., if such supplemental information is significant and necessary for evaluation of the submittal.

Once Amtrak approves an application and the License Agreement issued, no variance from the plans, specifications, methods of construction, etc. will be considered or permitted without resubmission of plans to and receipt of approval from Amtrak.

1.4 PERMIT APPROVAL – NOTIFICATION TO PROCEED

Notification to Proceed with Construction: After approval of the engineering plans, computations and specifications, and the execution of the License Agreement, the Applicant's project can be undertaken. The Applicant will notify Amtrak a minimum of 21 working days prior to the desired start of construction (see Amtrak Engineering Practice EP3014, Section 01141A, Safety and Protection of Railroad Traffic and Property). The Applicant is responsible for notifying and coordinating the work with all utility owners.

1.5 MODIFICATION OF EXISTING FACILITIES

Any replacement or modification of an existing carrier pipe and/or casing shall be considered a new installation subject to the requirements of these specifications. The owner of all pipelines and other occupancies shall notify in writing, the Manager, Pipe and Wire Agreements of any intention to replace or modify existing facilities.

1.6 ABANDONED PIPELINES AND/OR FACILITIES

The owner of all pipelines and other occupancies shall notify in writing, the Manager, Pipe and Wire Agreements, of the intention to abandon. The owner will be continually billed for the occupancy until such written notice is received.

Upon abandonment, the carrier pipe shall be removed and the casing shall be completely filled with cement grout, compacted sand or other materials approved by Amtrak, using methods approved by Amtrak. If it is impracticable to remove the carrier pipe, then the carrier must be filled along with the annular space between the casing and the carrier.

Facilities other than pipelines will be removed or altered at abandonment to the satisfaction of Amtrak.

1.7 CONFLICT OF SPECIFICATIONS

Where laws or orders of public authority prescribe a higher degree of protection than specified herein, then the higher degree so prescribed shall be deemed a part of these specifications. Any such requirements shall be clearly referenced in the application.

1.8 DEFINITIONS

AASHTO – American Association of State Highway and Transportation Officials

Amtrak – National Railroad Passenger Corporation, and/or the duly authorized representative.

ANSI – American National Standards Institute

API – American Petroleum Institute

Applicant – Individuals, Owners, Corporations, and Municipalities desiring occupancy of Amtrak property by a pipeline.

AREMA – American Railway Engineering and Maintenance-of-Way Association

ASTM – American Society for Testing and Materials

Boring – Pushing a pipe though fill material, with a boring auger rotating within the pipe to remove the soil.

Carrier Pipe – Pipe containing primary fluid or cable through occupancy area.

Casing Pipe – Protective encasement for a carrier pipe whose function is both structural and for containment of carrier fluids within the occupancy area, and/or dispersion of carrier fluids beyond the occupancy area.

Cooper E-80 – Live load for each track based on four 80 kips axle load with 5' axle spacing.

Horizontal Directional Drilling (Directional Boring) – method of controlled drilling beneath existing facilities using a pilot hole bore.

Jack Boring – method of jacking a pilot rod beneath existing facilities between a launching pit and a receiving pit.

Longitudinal Occupancy – The installation and maintenance of pipelines that do not cross tracks, along and adjacent to tracks and within Amtrak property, right-of-way and facilities.

LSCM – Low strength cementitious material

MSDS – Material Safety Data Sheet

NEC – National Electric Code

NESC – National Electric and Safety Code

License Agreement – Agreement between Amtrak and applicant to allow applicant to construct and maintain pipelines under, over, across or longitudinally along Amtrak property, right-of-way and facilities.

Open-Cut Trenching – Surface excavation methods to allow the installation of pipelines.

OSHA – Occupational Safety and Health Administration.

Pits (Launch/Receiving) – Excavations at each end of a work area to allow jacking, boring or tunneling operations beneath existing site conditions.

Right of Entry Permit – Permit allowing applicant to enter Amtrak property solely for the purpose of obtaining information required for the design and engineering of a proposed License Agreement.

Transverse Occupancy – The installation and maintenance of pipelines on Amtrak property, right-of-way and facilities, where such pipelines cross tracks.

Tremie Grouting – A method in which concrete placed underwater through a pipeline (tremie pipe) to form a seal between the subsurface and water levels.

Tunneling – Method of boring with or without the use of placing liner plates behind a tunneling shield of tunneling machine, thus forming a casing for the installation of a carrier pipe under existing conditions

1.9 PUBLICATION STANDARDS

AWS – American Welding Society, Inc., 550 NW 42nd Avenue, Miami, FL 33126-0567

ANSI – American National Standards Institute, Inc., 11 West 42nd Street, New York, NY 10036

ASTM – American Society for Testing and Material, 100 Bar Harbor Drive, West Conshohocken, PA 19428-2959

AREMA – American Railway Engineering and Maintenance-of-Way Association, 8201 Corporate Drive, Suite 1125, Landover, MD 20785

AWWA – American Water Works Association, Inc., 1401 New York Avenue N.W., Suite 640, Washington, DC 20005

OSHA – Occupational, Safety and Health Administration, Superintendent of Documents, U.S. Printing Office, Washington, DC 20402

NACE – National Association of Corrosion Engineers, P.O. Box 201009, Houston, TX 77216-1009

If other than American Railway Engineering and Maintenance-of-Way Association (AREMA), American Society for Testing and Materials (ASTM), and American National Standards (ANSI) specifications are referred to for design, materials or workmanship on the plans and specifications for the work, then copies of the applicable sections of such other specifications shall accompany the plans and specifications for the work.

PART 2 – TECHNICAL REQUIREMENTS

2.1 LOCATION OF PIPELINE ON THE RIGHT-OF-WAY

Pipelines laid longitudinally on Amtrak Right-of-Way shall be located as far as practicable from any tracks or other important structures and as close to the Amtrak property line as possible. Longitudinal pipelines must not be located within drainage ditches located on the right-of-way.

Pipelines shall be located, where practicable, to cross tracks at approximate right angles thereto, but generally no less than 45°.

Pipelines shall not be located within the limits of a turnout (switch) when crossing the track. The limits of the turnout extend from the second tie before the point of the switch to the first tie beyond the last long timber.

Pipelines shall not be located within the limits of a highway crossing at grade. If it is shown that no other location is possible, the Applicant will be responsible for reimbursing Amtrak for all costs associated with the removal and reconstruction of the grade crossing.

Pipelines and casings shall be suitably insulated from underground conduits or direct burial cables carrying electric wires on Amtrak property, in accordance with ANSI and NESC standards.

Pipelines shall not be placed within a culvert, under railroad bridges, nor closer than 45' to any portion of any railroad bridge, building or other important structure, except in special cases, and then by special design, as approved by Amtrak.

2.2 CARRIER PIPE

All proposed pipes, ditches and other structures carrying surface drainage on Amtrak property and/or crossing under Amtrak tracks shall be designed to carry the run-off from a 100 year storm. Computations indicating this design and suitable topographic plans, prepared by a Registered Professional Engineer licensed in the State in which the work is being performed shall be submitted to Amtrak for approval. If the drainage is to discharge into an existing drainage channel on Amtrak Right-of-Way and/or under Amtrak tracks, the computations should include the hydraulic analysis of any existing structures. Submitted with the computations should be formal approval of the proposed design by the appropriate governmental agency.

Carrier pipes within a casing shall be designed as if they are not encased.

All pipes shall be designed for the external and internal loads to which they will be subjected. The dead load of earth shall be considered 120 pounds per cubic foot. Railroad live loading shall be Cooper's E-80 with 50% added for impact. The following shall be the minimum requirements for carrier pipes:

1. Reinforced concrete pipe – ASTM C76, Class V. Wall C
2. Ductile Iron Pipe – ANSI A21.51, Class 56
3. Corrugated Metal Pipe – AREMA Manual, Chapter 1, Part 4.
4. Cast Iron Pipe – for culverts and gravity sewers – ASTM A-716 Extra Heavy.
5. Steel Pipe – ASTM A53, Type E or S, Grade A or B
6. Polyethylene – for cable, wire or fiber optic lines – Special approval required for pipe in excess of 6" OD. ASTM D 3350 – Standard Specification for Polyethylene Plastic Pipe and Fittings Materials, and ASTM D2513 – Standard Specification for Thermoplastic Gas Pressure Pipe, Tube and Fittings or AWWA C 901/C 906 – Standards for Polyethylene (PE) Pressure Pipe and Tubing for Water Service.
7. Others – as approved by Amtrak.

Pipelines carrying oil, liquefied petroleum gas, natural or manufactured gas and other flammable products shall conform to the requirements of the current ANSI B 31.4 with Addenda "*Liquid Transportation Systems for Hydrocarbons, Liquid Petroleum Gas, Anhydrous Ammonia, and Alcohol's*"; ANSI B 31.8 "*Gas Transmission and Distribution Piping Systems*"; and other applicable ANSI Codes except that the maximum allowable stresses for design of steel pipe shall not exceed the following percentages of the specified minimum yield strength (multiplied by the longitudinal joint factor) of the pipe as defined in the ANSI Codes:

8. Steel pipe within a casing under Amtrak tracks, across Amtrak right-of-way, and longitudinally on Amtrak right-of-way (the following percentages apply to hoop stress):
   a. Seventy-two percent for installation of oil pipelines.
   b. Fifty percent for pipelines carrying liquefied petroleum gas and other flammable liquids with low flash point.
   c. Sixty percent for installation of gas pipelines.

2.3 CASING PIPE

Pipelines under or along Amtrak tracks and across Amtrak right-of-way shall be encased in a larger pipe or conduit called the casing pipe.

Casing pipe will be required for all pipelines carrying oil, gas, petroleum products, or other flammable or highly volatile substances under pressure, and all non-flammable substances which, from their nature or pressure, as determined by Amtrak, might cause damage if escaping on, under, over, or near Amtrak property.

For non-pressure sewer or drainage crossings, where the installation is approved by Amtrak, the casing pipe may be omitted when the carrier pipe strength is capable of withstanding railroad loading hereinafter specified.

The casing pipe shall be designed in accordance with criteria on Section 2.4. Casing pipe shall be installed so as to provide an even bearing pressure throughout its length. Casing pipe laid transverse to the railroad shall slope to one end.

Protection at ends of casings:

1. Casings for carriers of flammable substances shall be suitably sealed to the outside of the carrier pipe. Details of seals shall be shown on the plans.
2. Casings for carriers of non-flammable substances shall have both ends of the casing blocked up in such a way as to prevent the entrance of foreign material, but allowing leakage to be safely detected in the event of a carrier break.
3. Where ends of casings are at or above ground surface and above high water level, they may be left open, provided drainage is afforded in such a manner that leakage will be conducted away from railroad tracks and structures.

Vents:

4. All sealed casings shall be adequately vented. Special attention shall be given to sealed casings for flammable substances in accordance with ANSI Standards. Vent pipes shall be of sufficient diameter, but in no case less than 2" in diameter, and shall be attached near each end of the casing and project through the ground surface at right-of-way lines or not less than 45' (measured at right angles) from centerline of nearest track.
5. Vent pipes shall extend not less than 4' above the ground surface. Top of vent pipe shall have a down-turned elbow, properly screened, or a relief valve. Vents in locations subject to high water shall be extended above the maximum elevation of high water and shall be supported and protected in a manner approved by Amtrak.
6. Vent pipes shall be at least 4' vertically from aerial electric wires or greater if required by NESC and ANSI Standards.
7. When the pipeline is in a public highway, street-type vents shall be installed.

If additional tracks are constructed in the future, the casing shall be extended correspondingly at the expense of the Applicant.

2.4 DESIGN CRITERIA

Pipes may be rigid or flexible, as permitted by their specific use. The design criteria follows, and shall be in accordance with the current AREMA Manual for Railway Engineering.

The inside diameter of the casing pipe shall be such as to allow the carrier pipe to be subsequently removed without disturbing the casing or the roadbed. For carrier pipe less than 6" in diameter, the inside diameter of a steel casing pipe shall be at least 2" greater than the largest outside diameter of the carrier pipe, joints, or couplings; for carrier pipe 6" and over in diameter, the inside diameter of a steel casing pipe shall be at least 4" greater than the largest outside diameter of the carrier pipe, joints, or couplings.

Casing pipe under Amtrak tracks and across Amtrak Right-of-Way shall extend the greater of the following distances measured at right angles to centerline of tracks:

1. Across the entire width of Amtrak Right-of-Way.
2. 3' beyond ditch line.
3. 2' beyond toe of slope.
4. A minimum distance of 25' each side from centerline of outside track when casing is sealed at both ends.
5. A minimum distance of 45' from centerline of outside track when casing is open at both ends.

Where installation of the casing pipe is proposed by means of open cut, the designer should determine the effects upon the casing due to change in weight of the new compacted fills and potential for lateral spreading of the embankment and account for these effects in the design. Where segmental casing pipe segments are used, temporary or permanent tension rods may be required by the Engineer.

The values shown in Table 1 shall be used for the live load vertical pressure on a buried structure for the various heights of cover.

TABLE 1 (MODIFIED)
(AREMA, CHAPTER 1, PART 4, TABLE 4-39)
PRESSURE FROM COOPER E-80 LIVE LOAD, INCLUDING IMPACT, FOR VARIOUS HEIGHTS OF COVER

Height of Cover (feet)	Live Load Pressure (lb/sq.ft.)
5.5	2400
8	1600
10	1100
12	800
15	600
20	300
30	100

Note: If height of cover, from bottom of cross tie to top of structure, is over 30', use dead load pressure only.

Steel casing pipe shall have a minimum wall thickness as shown in Table 2 (next page), unless computations indicate that a thicker wall is required. Computations showing the adequacy of casing pipe wall thickness shall be furnished as part of the submittal.

TABLE 2
(AREMA, CHAPTER 1, PART 5, TABLE 5-1)

Pipe Diameter	Coated or Cathodically Protected	Uncoated and Unprotected
Nominal Pipe Size (inches)	Nominal Wall Thickness (inches)	Nominal Wall Thickness (inches)
12¾ and under	0.188	0.188
14	0.188	0.250
16	0.219	0.281
18	0.250	0.312
20 and 22	0.281	0.344
24	0.312	0.375
26	0.344	0.406
28	0.375	0.438
30	0.406	0.469
32	0.438	0.500
34 and 36	0.469	0.531
38	0.500	0.562
40	0.531	0.594
42	0.562	0.625
44 and 46	0.594	0.656
48	0.625	0.688
50	0.656	0.719
52	0.688	0.750
54	0.719	0.781
56 and 58	0.750	0.812
60	0.781	0.844
62	0.812	0.875
64	0.844	0.906
66 and 68	0.875	0.938
70	0.906	0.969
72	0.938	1.000

Steel pipe shall have minimum yield strength of 35,000 psi. The ASTM or API specification and grade for the pipe are to be shown on the Pipe Data Sheet.

Corrugated metal pipe or corrugated structural plate pipe may be used for casing, provided the pressure in the carrier pipe is less than 100 psi, and only when placed by the open cut method. Jacking or boring through railroad embankment for corrugated pipe is not permitted. Pipe shall be bituminous coated and shall conform to the current AREMA Manual for Railway Engineering, Chapter 1, Part 4.

Tunnel liner plates shall be galvanized and bituminous coated and shall conform to the current, at time Application is made, AREMA Manual for Railway Engineering, Chapter 1, Part 4. In no event shall the liner plate thickness by less than 0.105".

If the tunnel liner plates are used only to maintain a tunneled opening until the carrier pipe is installed, and the annular space between the carrier pipe and the tunnel liner is completely filled with cement grout within a

reasonably short time after completion of the tunnel, then the tunnel liner plates need not be galvanized and coated.

Reinforced concrete pipe may be used for a casing. For a cover depth of 14' or less, reinforced concrete pipe shall conform to the current ASTM C76, Class V, Wall C. It may be used in open cut methods of installation, or when suitably designed for jacking methods. For depth of cover greater than 14', the designer shall prepare an engineering analysis in accordance with the current, at time of Application, AREMA Manual for Railway Engineering, Chapter 8, Part 10. For elliptical or arch pipe, where reinforced concrete pipe with supporting strength of the pipe (D) equal to 3,000 pounds per linear foot is not available, a separate engineering analysis shall be submitted.

For flexible casing pipe, a minimum vertical deflection of the casing pipe of 3 percent of its diameter plus ½" shall be provided so that no loads from the roadbed, track, traffic or casing pipe itself are transmitted to the carrier pipe. When insulators are used on the carrier pipe, the inside diameter of flexible casing pipe shall be at least 2" greater than the outside diameter, including insulation, of the carrier pipe for pipe less than 8" in diameter; at least 3¼" greater for pipe 8" to 16" inclusive in diameter; and at least 4½" greater for pipe 18" and over in diameter.

When steel casing pipe is used, the joints shall be fully closed by welding or mechanical means to ensure tightness. The closure shall develop the full strength of the casing pipe. Closure details shall be shown on the plans.

2.5 SIGNS

All pipelines (except those in streets where it would not be practical to do so) shall be prominently marked at Right-of-Way lines (on both sides of track for under crossings) by durable, weatherproof signs located on the edge of Right-of-Way over the centerline of the pipe. Signs shall show the following:

1. Name and address of Owner
2. Contents of Pipe
3. Pressure in Pipe
4. Depth of pipe below grade at point of sign
5. Emergency telephone in event of pipe rupture

The material, size of lettering and the installation method of the sign shall be as approved by Amtrak. For pipelines running longitudinally on Amtrak property, signs shall be placed over the pipe (or offset and appropriately marked) at all changes in direction of the pipeline. Such signs should also be located so that when standing at one sign the next adjacent sign in either direction is visible. The owner shall maintain all signs on Amtrak Right-of-Way as long as the Occupancy Permit is in effect. Any entry on to Amtrak property shall be made in accordance with all provisions of the Right of Entry Permit.

2.6 EMERGENCY SHUT-OFF VALVES

Accessible emergency shut-off valves shall be installed on each side of the railroad at locations selected by Amtrak. Where pipelines are provided with automatic control stations and within distances approved by Amtrak, no additional valves will be required. Description of location of those facilities shall be part of the Application.

2.7 DEPTH OF PIPELINE INSTALLATION

Pipe under Amtrak tracks and across Amtrak Right-of-Way shall be not less than 5½' from bottom of tie to top of casing at its closest point. On other portions of Right-of-Way where casing is not directly beneath any track, the depth from ground surface or from bottom of ditches to top of casing shall be not less than 4', unless otherwise specified herein.

2.8 CATHODIC PROTECTION

Cathodic protection shall be applied to all pipelines and casings carrying flammable substances in accordance with ANSI Standards.

Where casing and/or carrier pipe is cathodically protected by other than anodes, Amtrak shall be notified and a suitable test shall be made and witnessed by Amtrak to insure that all structures and facilities are adequately protected from the cathodic current in accordance with the recommendation of Reports of Correlating Committee on Cathodic Protection, current issue by the National Association of Corrosion Engineers.

2.9 SOIL INVESTIGATIONS

For all pipe crossings, soil borings or other soil investigations approved by Amtrak shall be made to determine the nature of the underlying material (see Part 1, Section 1.2 for procedure to enter Amtrak property). Boring location plans need to be approved by Amtrak in advance of taking of the borings.

Borings shall be made on each side of the tracks, on the centerline of the pipe crossings, and as close to the tracks as practicable.

Soil borings shall be made in accordance with the current, at time of Application, AREMA Manual for Railway Engineering, Chapter 8, Part 22. Soils shall be investigated by the split-spoon and/or thin walled tube method, and rock shall be investigated by the coring method, as appropriate. The location of the carrying pipe and/or casing shall be superimposed on the Boring Location Plan before submission to Amtrak.

Soil boring logs shall clearly indicate all of the following:

1. Boring number as shown on Boring Location Plan.
2. Elevation of ground at boring, using the same NGVD (National Geodetic Vertical Datum) or NAVD (North American Vertical Datum) as the pipeline construction plans. The location of the carrier pipe and/or casing pipe shall be superimposed on the boring logs before submission to Amtrak.
3. Description or soil classification of each soil sample encountered shall be made in accordance with the Unified Soils Classification System. Classification and description of rock shall include type, local designation, joint or fracture frequency, foliation and, joint dip, surface degree of weathering and any other pertinent observations concerning the drilling and recovery.
4. Elevations or depth from surface for each change in strata.
5. Identification of depth where samples were taken or attempted and percentage of recovery.
6. Location of ground water at time of sampling and, if available, subsequent readings shall be reported. Observed conditions, such as depth of hole or casing, drill fluid, recent precipitation, surface elevation of nearby bodies of water and time permitted for the stabilized level to occur shall be noted.
7. Natural dry density in pounds per cubic foot for all strata.
8. Unconfined compressive strength in tons per square foot for all cohesive strata.
9. Natural water content (percent), liquid limit (percent) and plastic limit (percent) for all cohesive soils.
10. Standard Penetration Test N Value in blows per foot (or inches/blow), for each sample obtained or unsuccessful attempt.
11. Samples shall be retained for review by Amtrak.
12. Failed boring attempts shall be logged and reported.
13. All borings and attempts shall be tremie grouted with non-shrink grout or other approved material. The quantity of grout material used shall be measured and reported.

Soil boring logs shall be accompanied with a plan drawn to scale showing the location of borings in relation to the tracks and the proposed pipe location, the elevation of ground surface at each boring, and the elevation of the base of rail of the tracks. Elevations shall be shown to the nearest 0.1 foot.

PART 3 – CONSTRUCTION

3.1 CONSTRUCTION INSPECTION REQUIREMENTS

The Applicant shall provide full time on-site inspection by a Resident Engineer during the installation of temporary and permanent facilities approved by Amtrak. This inspection shall be under the supervision of a Registered Professional Engineer licensed in the State in which the work is being performed. The Professional Engineer shall certify that the facilities were installed in accordance with these specifications and the approved plans. The on-site Resident Engineer shall coordinate the activities of the contractor with the Amtrak Project Engineer. All work shall be performed in accordance with Amtrak Engineering Practice EP3014 Maintenance and Protection of Railroad Traffic during Contractor Operations.

3.2 INSTALLATION METHODS

Open Cut or Braced Trench

1. Installation by open cut or braced trench methods shall comply with the current, at time of Application, AREMA Manual for Railway Engineering, Chapter 1, Part 4. At least 60 days may be required for Amtrak review and approval of open cut or braced trench methods.
2. Where Amtrak has approved the open cut method, pipe shall be installed on a Class B bed of compacted graded aggregate. Sand backfill shall be used to fill around the sides and on top of the pipe. A colored warning tape shall be placed a minimum of 12" above the top of the pipe. Additional backfill shall be well-graded, clean granular soil having less than 20 percent by dry weight passing No. 200 US STD sieve. Maximum aggregate size shall be ½". Backfill shall be placed in loose 8" layers and compacted to at least 95 percent of its maximum density at within 2% of the optimum moisture content as determined in accordance with current ASTM D1557 (AASHTO T180).
3. Prior to the start of an open cut installation, the contractor shall have all materials on site, including emergency stand-by handling equipment.

Jacking

4. Jacking of casing pipe shall be in accordance with the current AREMA Manual for Railway Engineering, Chapter 1, Part 4. This operation shall be continuous once started, and shall be conducted without hand-mining ahead of the pipe and without the use of any type of boring, augering, or drilling equipment. Ordinarily 36-inch diameter pipe is the minimum size that should be used. Bracing and backstops shall be designed and jacks of sufficient rating shall be used so that the jacking can be progressed without stoppage (except for adding lengths of pipe) until the leading edge of the pipe has reached the receiving pit or is at least 25' from the centerline of the last track.
5. When jacking reinforced concrete pipe, grout holes, tapped for no smaller than 1½" ppe, shall be cast into pipe at manufacture. Grout holes shall be spaced at approximately 3' around the circumference and 4' longitudinally with a minimum of three grout holes around the circumference. Immediately upon completion of jacking operations, the installation shall be pressure grouted.

Horizontal Directional Drilling / Directional Boring

6. Installations by this method of pipe greater than 6" outside diameter are generally not acceptable. However, consideration will be given where the depth of cover is substantial, greater than 40', or the bore is in rock. Factors considered will be track usage, pipe size, contents of pipeline, soil condition, etc.
7. In addition to the information required in Section 1.3, the following preliminary information must be submitted with the request for consideration of this type of installation:
   a. Several soil borings along the proposed pipeline route
   b. A construction procedure, including a general description of equipment to be used
8. If Amtrak determines this method of installation is acceptable, final design plans and specifications are to be prepared and submitted for approval. The project specification must

require the contractor to submit to Amtrak for approval a complete construction procedure of the proposed boring operation. Included with the submission shall be the manufacturer's catalog information describing the type of equipment to be used. Where boring machines are approved, it is with the understanding that the machine is capable of stabilizing the bore in the event of blockage.

Tunneling with Liner Plate

9. Tunneling operations shall be conducted as approved by Amtrak. Care shall be exercised in trimming the surface of the excavated section in order that the steel liner plates fit snugly against undisturbed material.
10. Excavation shall not be advanced ahead of the previously installed liner plates any more than is necessary for the installation of the succeeding liner plate. The vertical face of the excavation shall be supported as necessary to prevent sloughing.
11. At any interruption of the tunneling operation, the heading shall be completely bulkheaded.
12. Unless otherwise approved by Amtrak the tunneling shall be conducted continuously on a 24-hour basis, until the tunnel liners extend at least equal to 25' beyond the centerline of the last track.
13. A uniform mixture of 1:6 cement grout shall be placed under pressure behind the liner plates to fill any voids existing between the liner plates and the undisturbed material. Grout holes tapped for no smaller than ½" pipe, spaced at approximately 3' around the circumference of the tunnel liner shall be provided in every third ring. Grouting shall start at the lowest hole in each grout panel and proceed upwards simultaneously on both sides of the tunnel. A threaded plug shall be installed in each grout hole as the grouting is completed at that hole.
14. Grouting shall be kept as close to the heading as possible, using grout stops behind the liner plates if necessary. Grouting shall proceed as directed by Amtrak, but in no event shall more than six lineal' of tunnel be progressed beyond the grouting.

Tunneling Shields

15. All pipes 60" and larger in outside diameter shall be placed with the use of a tunneling shield unless otherwise approved by Amtrak. Pipes of smaller diameter may also require a shield when, at the sole discretion of Amtrak, soil or other conditions indicate its need.
16. The shield shall be of steel construction designed to support railroad track loading as specified herein, in addition to other loadings it must sustain. The advancing face shall be provided with a hood, extending no less than 20 inches beyond the face and extending around no less than the upper 240 degrees of the total circumference. It shall be of sufficient length to permit the installation of at least one complete ring of liner plates within the shield before it is advanced for the installation of the next ring of liner plates. It shall conform to and not exceed the outside dimensions of the pipe being placed by more than one inch at any point on the periphery unless otherwise approved by Amtrak.
17. The shield shall be adequately braced and provided with necessary appurtenances for completely bulkheading the face with horizontal breast boards and arranged so that the excavation can be benched as may be necessary. Excavation shall not be advanced beyond the edge of the hood, except in rock.
18. Manufacturer's shop detail plans and manufacturer's computations showing the ability of the tunnel liner plates to resist the jacking stresses shall be submitted to Amtrak for approval.
19. The detail shield plans and design calculations prepared by a Registered Professional Engineer licensed in the state in which the work is being performed shall be submitted to Amtrak for approval. No work shall proceed until such approval is obtained.

Boring

20. This method consists of pushing the pipe into the fill with a boring auger rotating within the pipe to remove the soil. When augers or similar devices, are used for pipe emplacement, the front of the pipe shall be provided with mechanical arrangements or devices that will positively prevent the auger and cutting head from leading the pipe so that there will be no unsupported excavation ahead of the pipe. The auger and cutting head arrangement shall be removable from within the pipe in the event an obstruction is encountered. The over-cut by the cutting head shall not exceed the outside diameter of the pipe by more than one half inch. The face of cutting head shall be arranged to prevent the free flow of soft or poor material. The use of water of other liquids to facilitate casing emplacement and spoil removal is prohibited. Plans and descriptions of the arrangement to be used shall be submitted to Amtrak for approval and no work shall proceed until such approval is obtained.
21. Any method which employs simultaneous boring and jacking or drilling and jacking for pipes over 8" in diameter which does not have the above approved arrangement will not be permitted. For pipes 8" and less in diameter, augering or boring without this arrangement may be considered for use only as approved by Amtrak.

3.3 CONSTRUCTION OPERATIONS

All construction operations shall be conducted so as not to interfere with, interrupt, or endanger the operation of trains or damage, destroy, or endanger the integrity of railroad facilities. All work on and near Amtrak property shall be conducted in accordance with Amtrak safety rules and regulations. The contractor shall secure and comply with the Amtrak safety rules and shall give written acknowledgment to Amtrak that they have been received, read, and understood by the contractor and his employees. Construction operations will be subject to Amtrak inspection at any and all times.

If an obstruction is encountered during installation to stop the forward action of the pipe and it becomes evident that it is impossible to advance the pipe, operations will cease and the pipe shall be abandoned in place and filled completely with grout.

Bored or jacked installations shall have a bored hole essentially the same as the outside diameter of the pipe plus the thickness of the protective coating. If voids should develop or if the bored hole diameter is greater than the outside diameter of the pipe (plus coating) by more than approximately 1 inch, grouting or other methods approved by Amtrak shall be employed to fill such voids.

Pressure grouting of the soils or freezing of the soils before or during jacking, boring, or tunneling may be required at the discretion of Amtrak to stabilize the soils, control ground water, prevent loss of material and prevent settlement or displacement of embankment and/or tracks. Grout shall be cement, chemical or other special injection material selected to accomplish the necessary stabilization.

The material to be used and the method of injection shall be prepared by a Registered Professional Engineer licensed in the state in which the work is being performed, or by an experienced and qualified company specializing in this work and submitted for approval to Amtrak before the start of work. Proof of experience and competency shall accompany the submission. Material Safety Data sheet shall be provided for all materials.

When the presence of surface, ground and/or artesian water is known or expected to be encountered, pumps of sufficient capacity to handle the flow shall be maintained at the site by the contractor, and upon approval of Amtrak, the contractor shall operate them. Pumps in operation shall be constantly attended on a 24-hour basis, until, in the sole judgment of Amtrak, the operation can be safely halted. When dewatering, close observation by optical survey, or other instrumentation as required, to verify the adequacy of work, shall be maintained to detect any settlement or displacement of railroad embankment, tracks and facilities. A detailed plan of water control for work including instrumentation shall be submitted by the Applicant for approval by Amtrak.

All cranes, lifts, or other equipment that will be operated in the vicinity of the Railroad's electrification and power transmission facilities shall be operated and electrically grounded as required by EP304 section 01141A and shall comply with OSHA Safety and Health Standards, Page 175, Subpart N1926.950. OSHA 2207, Revised 1983, or as provided by the High Voltage Proximity Act.

At all times when the work is being progressed, a field supervisor for the work with no less than 12 months experience in the operation of the equipment being used shall be present. If boring, drilling, or similar machines are being used, the machine operator also shall have no less than 12 months experience in the operation of the equipment being used.

Blasting will not usually be permitted under or on Amtrak Right-of-Way. If the use of blasting is proposed, technical justification of its necessity must be submitted by review and approval. If blasting is approved, it must be performed in accordance with EP3003.

Equipment or personnel working closer than 15 feet to the centerline of an adjacent track shall be considered as fouling that track. Insofar as possible, all operations shall be conducted no less than this distance. Operations closer than 15' to the centerline of a track shall be conducted only with the permission of, and as directed by, a duly qualified Amtrak employee present at the worksite. Special arrangements must be made at least 21 working days in advance of the work, where fouling of track or structures is required for access. These operations require the prior approval of Amtrak.

Crossing of tracks at grade by equipment and personnel is prohibited, except by prior arrangement with, and as directed by Amtrak.

Support of Excavation Adjacent to Track.

1. **Launching and Receiving Pits**
   a. The location and dimensions of all pits or excavations shall be shown on the plans. The distance from centerline of adjacent track to face of pit or excavation shall be clearly labeled. The elevation of the bottom of the pit or excavation must be shown on the profile.
   b. The face of all pits shall be located at a minimum of 25' from the centerline of adjacent track, measured at right angles to track, unless otherwise approved by Amtrak.
   c. If the bottom of the pit excavation intersects the theoretical railroad embankment line (see EP3014, Section 02261A, Requirements for Temporary Sheeting and Shoring to Support Amtrak Tracks, Sketch 1), interlocking steel sheet piling, driven prior to excavation, must be used to protect the track stability. The use of trench boxes or similar devices is not acceptable in this area.
   d. Design plans and computations for the pits, signed and sealed by a Registered Professional Engineer licensed in the State in which the work is being performed, must be submitted by the Applicant at the time of application or by the contractor prior to the start of construction. If the pit design is to be submitted by the contractor, the project specification must require the contractor to obtain Amtrak's approval prior to beginning any work on or which may affect Amtrak's property.
   e. The sheeting shall be designed to support all lateral forces caused by the earth, railroad and other surcharge loads.
   f. After construction and backfilling, all sheet piling that is not removed within 10' of centerline of adjacent track must be cut off per EP3014, Section 02261A, Requirements for Temporary Sheeting and Shoring to support Amtrak tracks, paragraph 3.1.F.
   g. All excavated areas are to be illuminated (flashing warning lights not permitted) fenced and otherwise protected as directed by Amtrak.

3.4 SUPPORT OF TRACKS

When the jacking, drilling, tunneling or boring method of installation is used, and depending upon the size and location of the crossings, temporary track supporting structures shall be installed. The requirement for these temporary structures may be deleted only with the approval of Amtrak.

Unless otherwise agreed, all work involving rail, ties and other track material will be performed by Amtrak. The Applicant shall reimburse Amtrak for all costs associated with the installation and removal of track supports.

When excavation for a pipeline or other structure will be within the theoretical railroad embankment line (see EP3014, Section 02261A, Requirements for Temporary Sheeting and Shoring to Support Amtrak Tracks, Sketch 1) of an adjacent track, interlocking steel sheet piling will be required to protect the track.

Prior to the start of construction, the applicant must deliver a stockpile (minimum 10 tons) of approved railroad ballast to an area designated by Amtrak at the project site.

3.5 PIPELINES IN ROADWAYS UNDER BRIDGES

Pipelines to be installed under bridges that carry Amtrak tracks above a roadway shall be designed and constructed in conformance with all applicable Sections of this specification. The casing pipe, when required, may be designed for the applicable highway loading(see Sketch 4).

3.6 PIPELINES ON BRIDGES

Pipelines carrying flammable substances or non-flammable substances that by their nature might cause damage if escaping on or near railroad facilities or personnel shall not be installed on bridges over railroad tracks or bridges carrying railroad tracks.

In special cases when it can be demonstrated to Amtrak's satisfaction that such an installation is necessary and that no practicable alternative is available, Amtrak may permit the installation and only by special design approved by Amtrak (see Sketch 5).

Pipelines on bridges shall be so located as to minimize the possibility of damage from vehicles, railroad equipment, vandalism and other external causes. They shall be encased in a casing pipe. Where appropriate, permanent barriers shall be constructed at each end of the bridge to prevent trespassers from crossing the bridge via the pipe casing.

3.7 BONDING AND GROUNDING OF PIPELINES ON BRIDGES IN ELECTRIFIED TERRITORY

Carrier pipe shall be enclosed in a metal casing that is isolated from carrier pipe by approved insulators having a dielectric value of not less than 25 kV that provide an air gap between carrier pipe and casing of not less than 2 inches, in accordance with ANSI or NESC Standards.

Carrier pipe supporting hangers, mountings or cradles shall provide an insulation value of not less than 25 kV and provide an air gap of not less than 2 inches between casing and any portion of mounting assembly.

Casing shall be bonded to Amtrak's return conductor at each end through bridge steel or direct when bridge members are of non-conductive material conforming to Amtrak Standards.

The casing and installation equipment shall be bonded and grounded to an earth ground of not more than 25 ohms resistance to ground for construction. The applicant shall monitor adequacy of the ground.

3.8 DRAINAGE

Occupancies shall be designed and their construction shall be accomplished so that adequate and uninterrupted drainage of Amtrak Right-of-Way is maintained. If, in the course of construction it may be necessary to block a ditch, pipe or other drainage facility, temporary pipes, ditches or other drainage facilities shall be installed to maintain adequate drainage as approved by Amtrak. Upon completion of the work, the temporary facilities shall be removed and the permanent facilities restored.

Where disturbance of the ground may result in contamination of the ballast or this contamination occurs as result of a wash out, the Applicant shall be responsible for costs to restore the track and structure. Temporary soil erosion measures for protecting the track shall be submitted as part of the construction plan and approved by Amtrak.

Under no circumstances should additional flow be routed onto Amtrak Right-of-Way, either during construction or upon completion.

3.9 INSPECTION AND TESTING REQUIREMENTS FOR HAZARDOUS MATERIALS

For pipelines carrying flammable or hazardous materials, ANSI Codes B31.8 and B31.4, current at time of constructing the pipeline, shall govern the inspection and testing of the facility on Amtrak property except that proof-testing of strength of carrier pipe shall be in accordance with the requirements of ANSI Codes

B31.8 for location Classes 2, 3, or 4 or ANSI Code B31.4, as applicable, for all pipelines carrying oil, liquefied petroleum gas, natural or manufactured gas and other flammable substances.

PART 4 – INFORMATION SKETCHES

4.1 The following Information Sketches are attached:

Sketch 1 – Information to be shown on Plan Section of drawing.

Sketch 2 – Information to be shown on Profile Section of drawing.

Sketch 3 – Longitudinal Occupancy.

Sketch 4 – Pipeline in Roadway Under Railroad Bridge

Sketch 5 – Details for Bonding and Grounding of Pipelines

Sketch 6 – Pipe Crossing Data Sheet

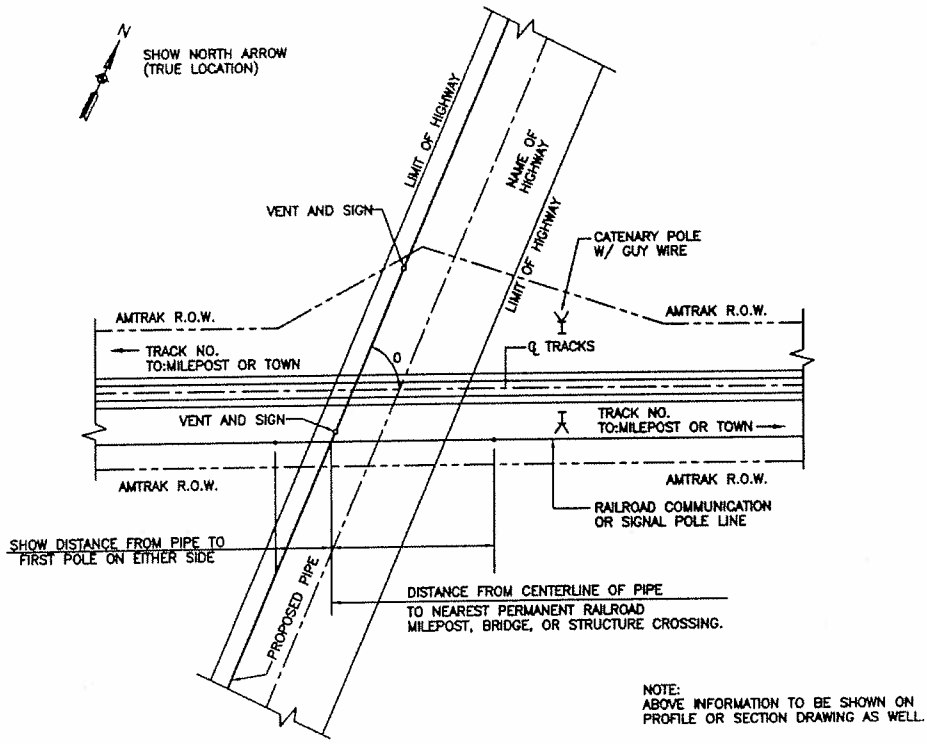

NOTE:
ABOVE INFORMATION TO BE SHOWN ON
PROFILE OR SECTION DRAWING AS WELL.

PLAN

SCALE:

NOTES:

1. IF MANHOLES ARE PLACED ON AMTRAK PROPERTY, DETAILS OF SAME, WITH CLEARANCES TO NEAR RAILS ARE TO BE SHOWN ON THE DRAWINGS.
2. IF THE PROPOSED PIPE IS TO SERVE A NEW DEVELOPMENT, A MAP SHOWING THE AREA IN RELATION TO ESTABLISHED AREAS AND ROADS IS TO BE SUBMITTED WITH THE REQUEST.
3. IF THE PROPOSED PIPE IS NOT WHOLLY WITHIN HIGHWAY LIMITS, A REASONABLE CONTINUATION OF THE PIPE SHOULD BE SHOWN.
4. SCALE OF DRAWING TO BE SHOWN.
5. BURIED COMMUNICATION AND SIGNAL LINES MAY BE PRESENT. OTHER UTILITIES MAY ALSO BE ENCOUNTERED. PERMITTEE MUST VERIFY PRESENCE AND LOCATION OF ANY SUB SURFACE LINE PRIOR TO STARTING CONSTRUCTION.
6. PROVIDE DIMENSIONS WHERE INDICATED. INCLUDING ANGLE OF CROSSING.

INFORMATION TO BE SHOWN ON PLAN SECTION OF DRAWING

Amtrak®	Office of Chief Engineer STRUCTURES National Railroad Passenger Corporation 30th Street Station, Philadelphia, Pennsylvania 19104	SKETCH 1 EP3005 SPECIFICATION Designed AEC Drawn JLM Date 3/01/02	File No: Design No: Sheet No. 1 of 6 Dwg. No. SK-1

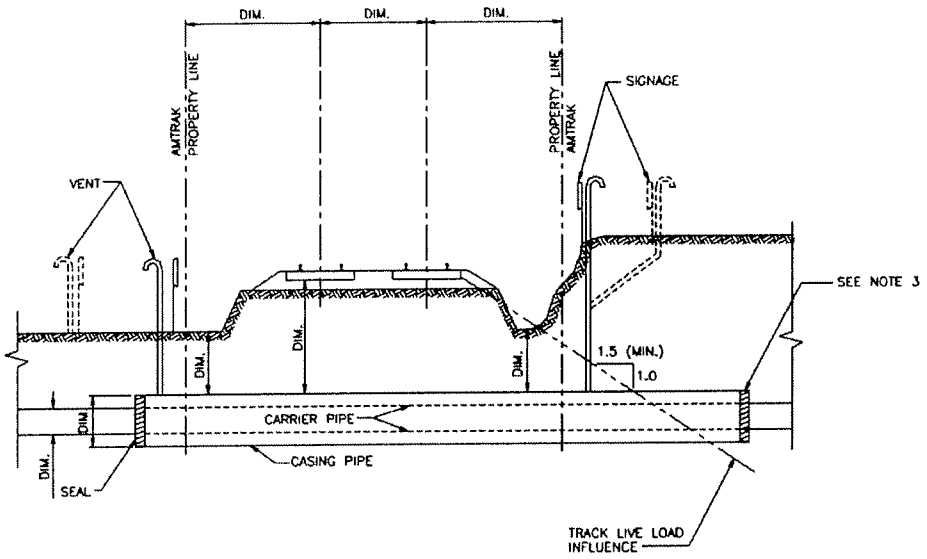

SECTION

SCALE:

NOTES:

1. ABOVE INFORMATION AND DIMENSIONS TO BE SHOWN ON PROFILE SECTION DRAWING.
2. VENTS IF REQUIRED.
3. END OF CASING PIPE MUST BE OUTSIDE THE TRACK LIVE LOAD INFLUENCE

INFORMATION TO BE SHOWN ON PROFILE SECTION OF DRAWING

Amtrak®	Office of Chief Engineer STRUCTURES National Railroad Passenger Corporation 30th Street Station, Philadelphia, Pennsylvania 19104	SKETCH 2 EP3005 SPECIFICATION Designed AEC Drawn JLM Date 9/10/02	File No: Design No: Sheet No. 2 of 6 No. SK-2 Dwg. REV 1

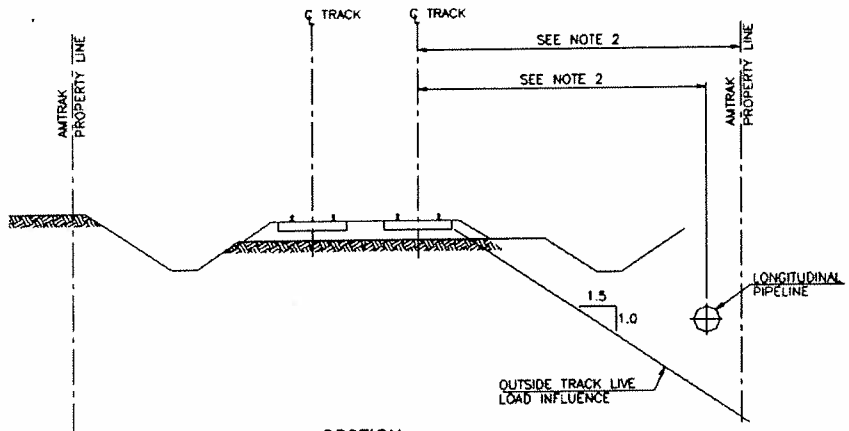

SECTION

SCALE:

NOTE:

1. ALL INFORMATION TO BE SHOWN TYPICALLY ON ALL CROSS SECTIONS AND PROFILE DRAWINGS.
2. SHOW THE DIMENSION ON PLAN VIEW.

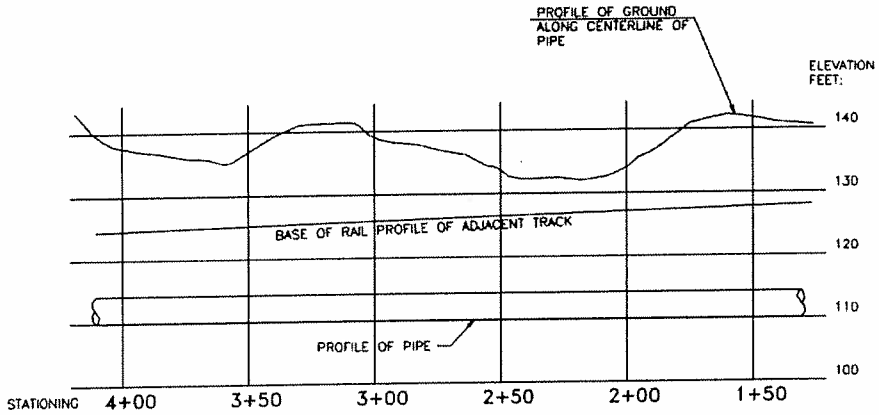

PROFILE

SCALE: VERT.
HORIZ.

LONGITUDINAL OCCUPANCY

Amtrak®

Office of Chief Engineer
STRUCTURES
National Railroad Passenger Corporation
30th Street Station, Philadelphia, Pennsylvania 19104

SKETCH 3
EP3005 SPECIFICATION

Designed AEC | Drawn JLM | Date 9/10/02

File No:	
Design No:	
Sheet No.	3 of 6
No.	SK-3
Dwg.	REV 1

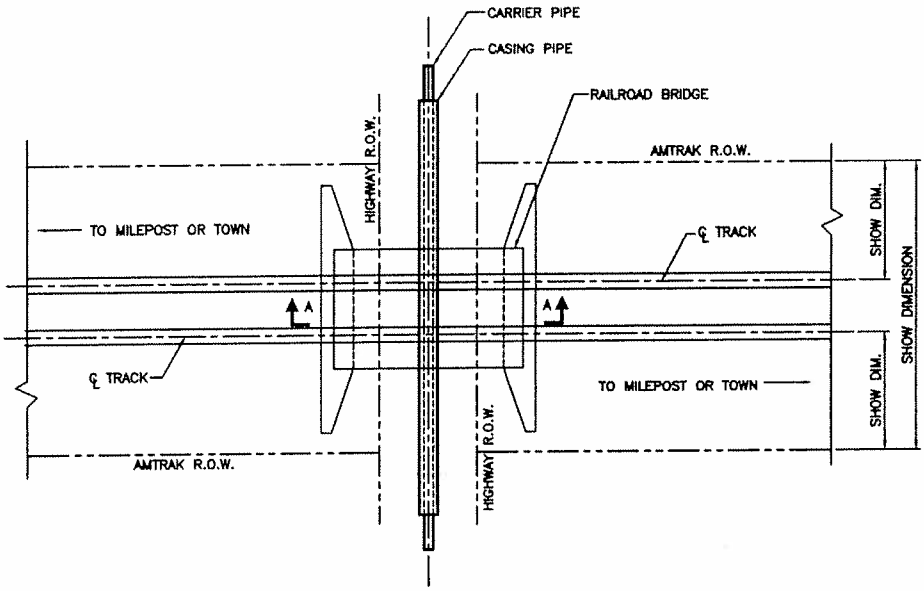

PLAN

SCALE:

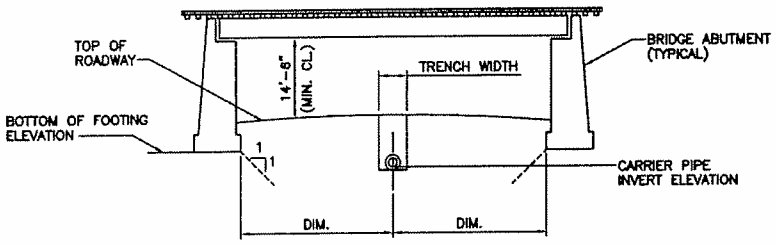

SECTION A–A

SCALE:

NOTE:

PIPE OR EXCAVATION MUST NOT BE WITHIN THE 1 TO 1 SLOPE LINE THAT EXTENDS FROM BOTTOM OF FOOTING.

PIPELINE IN ROADWAY UNDER RAILROAD BRIDGE

Amtrak®

Office of Chief Engineer
STRUCTURES
National Railroad Passenger Corporation
30th Street Station, Philadelphia, Pennsylvania 19104

SKETCH 4
EP3005 SPECIFICATION

Designed AEC | Drawn JLM | Date 3/01/02

File No:
Design No:
Sheet No. 4 of 8
Dwg. No. SK-4

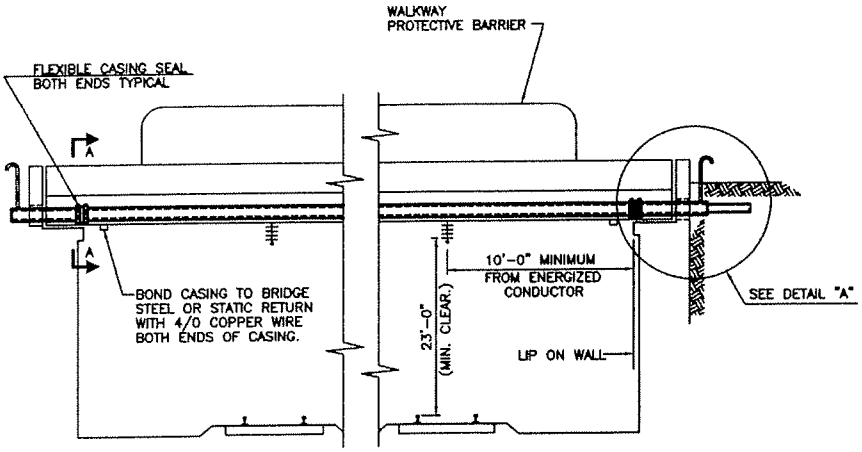

ELEVATION

SCALE:

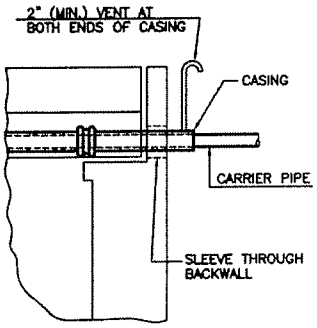

DETAIL "A"

SCALE:

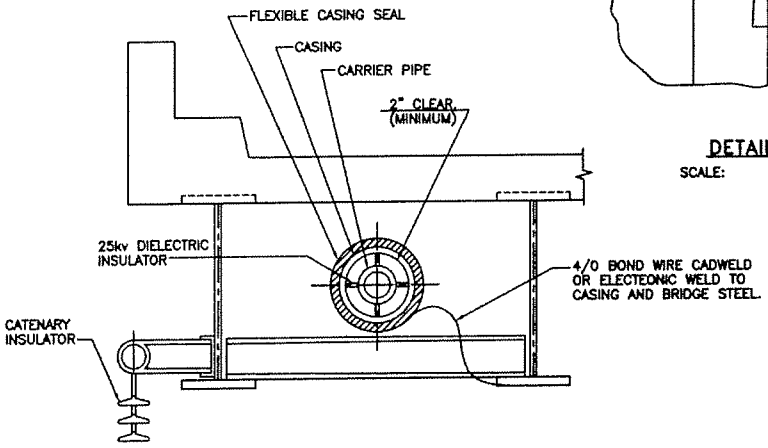

SECTION A-A

SCALE:

DETAILS FOR BONDING AND GROUNDING OF PIPELINE

Amtrak®	Office of Chief Engineer STRUCTURES National Railroad Passenger Corporation 30th Street Station, Philadelphia, Pennsylvania 19104	SKETCH 5 EP3005 SPECIFICATION Designed AEC Drawn JLM Date 3/01/02	File No: Design No: Sheet No. 5 of 6 Drwg. No. SK-5

PIPE CROSSING DATA SHEET

IN ADDITION TO PLAN AND PROFILE OF CROSSING, DRAWINGS SUBMITTED FOR AMTRAK APPROVAL SHALL CONTAIN THE FOLLOWING INFORMATION:

	CARRIER PIPE	CASING PIPE
CONTENTS TO BE HANDLED	_____	_____
NORMAL OPERATING PRESSURE	_____	_____
NOMINAL SIZE OF PIPE	_____	_____
OUTSIDE DIAMETER	_____	_____
INSIDE DIAMETER	_____	_____
WALL THICKNESS	_____	_____
WEIGHT PER FOOT	_____	_____
MATERIAL	_____	_____
PROCESS OF MANUFACTURE	_____	_____
SPECIFICATION	_____	_____
GRADE OR CLASS	_____	_____
TEST PRESSURE	_____	_____
TYPE OF JOINT	_____	_____
TYPE OF COATING	_____	_____
DETAILS OF CATHODIC PROTECTION	_____	_____
DETAILS OF SEAL OR PROTECTION AT ENDS OF CASING	_____	_____
METHOD OF INSTALLATION	_____	_____

CHARACTER OF SUBSURFACE MATERIAL AT THE CROSSING LOCATION _____ (UNIFIED SOIL CLASS)

APPROXIMATE ELEVATION OF GROUND WATER LEVEL _____ FEET

SOURCE OF INFORMATION OF SUBSURFACE CONDITIONS (BORING, TEST PITS OR OTHER)

NOTE:

ANY SOIL INVESTIGATION MADE ON RAILROAD PROPERTY OR ADJACENT TO TRACKS SHALL BE CARRIED ON UNDER THE SUPERVISION OF AMTRAK.

Amtrak®

This material is owned by and is the sole and exclusive property of the National Railroad Passenger Corporation (Amtrak), Office of Engineering, and is supplied on a confidential basis solely for use in connection with the design and construction of Amtrak facilities and equipment. The reproduction, display, sale or other distribution of this document without the express written consent of the National Railroad Passenger Corporation, Office of Engineering, is prohibited.

Office of Chief Engineer
STRUCTURES
National Railroad Passenger Corporation
30th Street Station, Philadelphia, Pennsylvania 19104

SKETCH 6
EP3005 SPECIFICATION

Designed AEC | Drawn JLM | Date 3/01/02

File No:	
Design No:	
Sheet No.	6 of 6
Dwg. No.	SK-6

NATIONAL RAILROAD PASSENGER CORPORATION
ELECTRIC TRACTION DEPARTMENT
30th. AND MARKET STREETS, 4th. FLOOR SOUTH, BOX 41
PHILADELPHIA, PA 19104

QUALIFIED CONSULTANTS FOR ELECTRIFICATION DESIGN - 2009-10

** Hatch Mott MacDonald
The Public ledger Building, Suite 1040
150 South Independence Mall West
Philadelphia, PA 19106
Attn: John O'Brien
Voice: (215)627-2277

* Parsons Transportation
Ten East Baltimore St., Suite 801
Baltimore, MD 21202
ATTN: John Grantham,P.E.
Voice: 410-223-2741

* SYSTRA Consulting, Inc.
1601 Market St., Suite1720
Philadelphia, PA 19103
Attn: Mike Mazairs
Voice: 215-861-9469

* HNTB Rail Systems Group
300 Apollo Drive
Chelmsford MA 01824
Attn: Mike A. Rassias
Voice: 978-905-4035

** STV Incorporated
1818 Market St., Suite 1410
Philadelphia, PA 19103
ATTN: Carl Mazeika
Voice: 215-832-3510

** LTK Engineering Services
100 West Butler Ave.
Ambler, PA 19002
Attn: Tristan Kneschke
Voice: 215-641-8821

** AECOM
The Atlantic Bldg.
260 South Broad St, Suite 1500
Philadelphia, PA 19102
Attn: Robert Fisher
Voice: 215-735-0832

* Gannett Fleming Transit and Rail
P.O. Box 80795
Valley Forge, PA 19484
ATTN: Terry Shantz, P.E., Vice President
Voice: 610-650-7730

** Parsons Brinckerhoff
Two Gateway Center, Suite 1800
Newark, NJ 07102 – 5098
Attn: Herbert Zwilling, Vice President
Voice: 973-565-4840

** Urban Engineers, Inc.
530 Walnut Street, 14th Floor
Phila., PA 19106 – 3685
Attn: Andrew J. Scott, Vice President
Voice: 215 – 922 – 8080

** URS
1 Penn Plaza, Suite 610
New York, NY 10119-3904
ATTN: Richard Aquino
Voice: 212-268-5030
Fax:212-268-5032

** The Burns Group
1835 Market Street, Suite 300
Philadelphia, PA 19103
Attn: Daren Petroski, PE
Voice: 215-979-7749

* Consultant is pre – qualified for all Amtrak electrification design projects

** Consultant must be approved on a “ job – specific “ basis
Revised 3/23/10

AMTRAK SPECIFICATION - AED-1

PROCEDURES AND DESIGN CRITERIA TO BE

EMPLOYED BY ELECTRIFICATION CONSULTANTS

ENGAGED IN THE DESIGN OF

ELECTRIFICATION FACILITIES

ON THE

NATIONAL RAILROAD PASSENGER CORPORATION

PREPARED BY:
AMTRAK - OFFICE OF THE DEPUTY CHIEF ENGINEER - ET
PHILADELPHIA, PA
(REVISED Nov. 2006)

TABLE OF CONTENTS

	CONTENTS	PAGE#
I.	QUALIFIED CONSULTANTS LIST	3
II.	PROCEDURES	3
III.	DESIGN DRAWINGS	5
IV.	STRUCTURAL DESIGN CRITERIA	7
V.	ELECTRICAL DESIGN CRITERIA	9
VI.	CONSTRUCTION RELATED SERVICES	9
VII.	RECORD TRACINGS	10
VIII.	APPROVALS	11

I. QUALIFIED CONSULTANTS LIST

A. Amtrak maintains a list of "Qualified Electrification Consultants" for its own convenience and to facilitate the process of selecting firms to perform electrification design on Amtrak property. Consulting firms are included on Amtrak's "Qualified" list based on the experience and knowledge of their key personnel, their past performance on electrification projects in general, and past performance on specific Amtrak projects.

B. A Consultant may be removed from Amtrak's "Qualified" List if it is determined the he no longer meets the requirements for inclusion as specified in paragraph "A" above.

C. Application for inclusion on Amtrak's "Qualified Electrification Consultants" list shall be submitted to:

R. G. Verrelle
Director - ET Design & Standards
National Railroad Passenger Corporation 30th Street Station, 4th Floor - South Tower
Philadelphia, PA 19104

Applications shall be the in form of a letter of interest and shall have attached the following information:

1. Key Personnel and their qualifications.
2. Past and current electrification projects (other than Amtrak) with the names and telephone numbers of their clients.
3. Past and current Amtrak electrification projects.

D. A Consultant may be included on the "Qualified" list on a probationary basis pending performance on an Amtrak Electrification Project.

E. Consultants must re-apply for inclusion on Amtrak's Qualified List each calendar year. Submissions must be made prior to October 1st of the preceding year in order to be considered.

II. PROCEDURES

A. Whenever the Term "Engineer" is used in this specification, it shall mean the Deputy Chief Engineer, ET of Amtrak or an authorized representative.

B. Upon receipt of notice to proceed with design work, the Electrification Consultant shall so inform the Director of Design - Electric Traction of Amtrak, and shall also provide the name of the Consultants Personnel responsible for the project management. Any changes in the Electrification Consultant's key personnel shall be approved by the Director - ET Design

C. Consultant's personnel, before entering Railroad property, shall execute an Amtrak "Permit to Enter Upon Property", and attend Amtrak's Contractor's Safety Class.

D. Prior to proceeding with the final design, the Consultant shall submit to Amtrak, for review and discussion, preliminary conceptual plans for the proposed electrification modifications. This is especially important in work involving changes to the catenary configuration, sectionalizing,

transmission lines, and signal power lines. The plans shall indicate the preliminary design concepts in sufficient detail for Amtrak design personnel to provide definitive direction in which to proceed with the design.

In conjunction with the conceptual submission, a field meeting shall be held between representatives of the Electrification Consultant and Amtrak's ET Design and Construction Departments to evaluate alternatives and establish an acceptable conceptual plan.

Following approval of the conceptual plans, submissions at the 30%, 60%, 90%, and final level, shall be provided for Amtrak's review and comment per the agreed upon schedule of submissions. Design calculations shall be submitted at all levels of submissions. The Electrification Consultant shall also provide an electrification cost breakdown at the 60% level and upon submission of final plans. Unless otherwise directed, submittals shall be sent to the attention of the Engineer.

E. It shall be the responsibility of the Consultant to verify the information contained on Amtrak record drawings pertaining to the project work by on-site inspection.

F. It shall be the responsibility of the Electrification Consultant to perform exploratory trenching to establish all underground Amtrak facilities such as ducts, pipes, and footings in all areas that excavation is required by the design. Hand dug exploratory trenches shall be as described in Section IV of this specification.

G. Final drawings, specifications and calculations shall be submitted to Amtrak for approval prior to being issued for bidding or construction. Each drawing shall bear the stamp of a Professional Engineer, registered in the state in which the work will be performed.

H. When it is necessary to revise existing Amtrak bonding and grounding plans, and sectionalizing plans, these Amtrak plans showing the revisions shall be submitted to the railroad upon completion of construction.

I. Unless otherwise instructed, the Consultant shall utilize the current standard Amtrak structural, catenary, and electrical details and materials in the design of the project.

J. The project sponsor (if other than Amtrak) shall be responsible for all liaison and coordination between all agencies and utilities that may be involved in the project work.

K. The Electrification Consultant shall be responsible for review of all shop and manufacturers drawings for all structures, catenary material or electrical equipment designed or specified by him in connection with the project.

III. DESIGN DRAWNGS

The design drawings prepared by the Consultant for the proposed electrification system modifications shall include, but not be limited to the following, and shall be arranged as described below.

A. The first drawing of the design set shall be a location plan sheet. The drawing shall contain, in addition to a plan of construction limits (scale not less than 1" = 100') the following information:

1) General notes - steel, concrete, excavation, etc.

2) List of abbreviations used.

3) Division of work and material supply legend.

4) List of reference drawings.

5) List of design drawings in set.

6) Construction sequence.

B. The next plan sheet shall be a profile drawing indicating the modifications to existing overhead lines (other than catenary) if required, and the relationship of the proposed construction to existing facilities. This profile drawing shall be drawn to a vertical scale 1" = 20' and a horizontal scale of 1" = 100'.

C. The next plan sheets shall be wiring plan drawings indicating all existing and new information pertaining to the catenary system, its supporting structures and ancillary conductors. These wiring plan drawings shall be drawn to a scale 1" = 20', 1"=30' or 1"=40' (depending upon project size).

D. The next plan sheets shall be the catenary profile drawings indicating the new and/or modifications to existing catenary wires and (if required) the relationship of the proposed construction to existing facilities. These profile drawings shall be drawn to a vertical scale 1" = 4' and a horizontal scale of 1" = 40'.

E. The next group of design drawings shall present erection diagrams for all new permanent and temporary structures and existing modified structures. Erection diagrams shall be drawn to a scale of 1" = 10, and shall be accompanied by a structure loading diagram (on the same drawing) drawn to a scale of 1" = 20, indicating all design loads (vertical, wind, side pull) applied to the structure. Erection diagrams shall also be presented to indicate the total or partial removal of existing structures and steps that may be required to accomplish the removal. Each erection diagram sheet shall contain a bill of material listing assembled items required per structure such as poles, crossbeams, sag braces, cross arms, insulator assemblies, guy anchors and foundation types. All listed items shall be marked and the drawings showing those details shall also be listed. Modified structures must have erection diagrams that have all of the information from the original document transposed onto them. These drawings will supercede the original drawings. The drawings must be drawn so that existing and new material can be differentiated.

F. Erection diagram sheets shall be followed by:

1) Structural steel design detail drawings.

2) Foundation and guy anchor design detail drawings.

3) Hardware and insulator assembly details which shall have bills of material identifying the various assembly components, including the manufacturers' name, and Amtrak AMMS number.

4) Wire sags and tension charts, as required.

5) Miscellaneous details as required.

6) Underground duct relocation plan, profile and detail drawings if required.

7) Electrical design drawings.

8) Master Bill of Material indicating mark number, Amtrak reference drawing number, AMMS number, description, manufacturer, unit of measurement, and ordering totals of the material being used.

G. On overhead bridge projects, drawings shall be prepared in accordance with Amtrak standard drawings ET1120-C, ET-1446-D, and ET-1447-D. These drawings shall indicate the temporary and permanent bonding and grounding of the bridge and shall contain a plan of the bridge crossing and all necessary details, clearances and elevations required to clearly show all of the work involved. Warning signs shall also be indicated and shall conform to current Amtrak standards as to location, size, and type used. An itemized bill of material (including Amtrak AMMS number) shall be included for all Railroad work.

H. Existing Amtrak structure bonding and ground plans, sectionalizing plans, and other related drawings shall be revised (where applicable) to indicate modifications and submitted in accordance with Section II of this specification.

I. Final structural and catenary drawings shall be accompanied by a suggested construction procedure outlining a step-by-step sequence to be followed to accomplish the project. This suggested procedure will be prepared to minimize electrical outages, track occupations, and interruptions to Railroad traffic and to maintain the safety of the workmen and the integrity of the transmission, catenary and signal systems during the proposed construction. All construction activities related to the project shall be integrated into the sequence of construction.

J. Unless otherwise directed, plan submissions prior to the final plan submittal shall consist of (1) CD ROM containing all pertinent design documents in PDF file format. All submittals are to be sent to the Director – ET Design.

K. Unless otherwise directed, after final plans are accepted and released for construction and material purchase, submit five (5) half-size sets of plans and (1) CD ROM containing all drawings in AutoCAD format. Submit material list and specifications, in their original file formats. Submittals shall be sent to the Director – ET Design.

IV. STRUCTURAL DESIGN CRITERIA

A. All structural design shall be in accordance with the current Amtrak specifications for the Design of Catenary Supporting Structures with the following amendments:

1) Current AISC specifications shall be used for the design fabrication and the erection of structural steel, except that allowable stresses shall not be increased one-third above stress values given in specifications when produced by wind loading unless specifically approved by Amtrak.

2) Current ACI Building Code Requirements for Reinforced Concrete shall be used for the design and construction of reinforced concrete structural elements of any structure.

3) Soil boring information including location of borings shall be provided on the design drawings, preferably on the foundation drawings if possible. A soil boring shall be taken at each new foundation location of any modified or proposed new structure. When the number of foundations makes it impracticable to provide a boring for every foundation, a proposed boring plan must be submitted to the Engineer for approval. Foundations shall be designed in accordance with allowable soil bearing values of materials encountered.

4) All design drawings shall be done under the supervision of a Professional Engineer, registered in the state where the work will be performed, who shall seal drawings submitted for final approval.

B. The Consultant is advised that the following criteria is to be included in the design and construction of all permanent and temporary facilities adjacent to Amtrak tracks:

1) On electrification projects involving modifications to existing facilities, a minimum of 12'-0" (plus curvature allowance) is to be maintained from centerline of track to face any new pole or guy strand.

2) On new electrification extensions or independent pole transmission lines a clearance of 18'-0" from centerline of track to face of pole or guy is required.

3) New anchors and foundations shall be located and designed so that any temporary sheeting required for their construction will not be closer than toe of slope shown for standard track section (7'-5" is dimension from gage of rail to toe of ballast slope for tangent track; see dimension on Standard Plan No. 70003B for dimensions on curved track).

Note: Minimum clearances less than those stated above must be approved by the Chief Engineer ET of Amtrak.

4) Exploratory trenches (3) three feet deep and fifteen (15) inches wide in the form of an "H" with outside dimensions matching the outside sheeting dimensions, are to be hand dug to determine the presence of any underground installation. The design drawings shall show an outline of the exploratory trenches. All work must be done in accordance with Amtrak requirements for temporary sheeting and shoring to support Amtrak's facilities.

5) The following should be included in the general notes on all drawings for temporary sheeting, shoring and excavation to be performed adjacent to Amtrak's tracks:

a) The Contractor (if applicable) is to provide a schedule of each operation and obtain approval of Amtrak so that it may be property supervised by Amtrak personnel.

b) Exploratory trenches are to be hand dug to determine the presence of any underground installation. Before proceeding, these trenches are to be back filled and immediately compacted. This work must be done in the presence of a railroad inspector.

c) Absolute use of track is required while driving sheeting adjacent to running track.

d) Cavities created by driving of sheet piling shall be filled with sand and any disturbed ballast should be restored and tamped immediately.

e) Sheet piling shall be cut off at top of tie during construction and then, after construction, shall be cut off eighteen (1 8) inches below existing ground line or grade and left in place.

f) The excavation should be covered and ramped each night and barricades and warning lights provided as directed by Amtrak.

g) Final back filling shall be as required by specifications.

h) When support of track or tracks is necessary during construction of above-mentioned facilities, interlocking steel sheeting adequately braced and designed to carry E-80 live load plus 50% impact is required. Soldier piles and lagging will be permitted for supporting adjacent track or tracks only when required penetration of steel sheet piling cannot be obtained or when in the opinion of the Engineer, steel sheet piling would be impracticable to place.

6) All drawings for temporary sheeting and shoring shall be prepared and stamped by a Professional Engineer and shall be accompanied by complete design computations when submitted for approval. The need for a Consultant to include details of temporary sheeting on design drawings will be determined when reviewing drawings submitted to Amtrak for structural approval.

7) Particular care shall be taken to avoid erosion or filling of Railroad's drainage facilities. Erosion and sediment control in the vicinity of the Railroad shall be as approved by the Engineer and the Railroad. Disrupted Railroad drainage facilities shall be corrected promptly as directed by the Engineer at the Contractor's sole expense.

V. ELECTRICAL DESIGN CRITERIA

A. Electrical Clearances shall be in accordance with applicable, current Amtrak and AREMA specifications. Any deviation from the established Railroad standards must be approved by Amtrak. Vertical clearances between overhead electrical transmission lines and roadways must also meet state and local municipal requirements.

B. The catenary gradient should be designed not to exceed the value 1/(5 x Speed) where practicable.As an alternate the catenary gradients specified in Chapter 33 of the AREMA Manual may be considered.

VI. CONSTRUCTION RELATED SERVICES

A. The A/E shall provide a qualified on-site (E.T.) inspector for the duration of the construction of the project. The E.T. inspector shall be responsible for the following:

1) Responding to Contractor's requests for information (R.F.I.'s).
2) Evaluating Contractor's submittals.
3) Reviewing shop drawings, calculations, and technical requirements.
4) Preparing as-built drawings.
5) Providing technical assistance during construction, testing and turnover.
6) Attending project meetings.
7) Participating in on-site inspections.
8) Preparing revised design documents to clarify or modify drawings during construction.
9) Assisting with preparation and resolution of punch list items.
10) Other Construction Related Services as required.

The Inspector shall keep the Director E.T. Design or his representative apprised of all transactions related to the above Construction Related Services.

VII. RECORD TRACINGS

A. Upon completion of the construction, the Consultant shall provide Amtrak with "as-built" or record drawings. This work will include the following.

1) Revisions to existing Amtrak tracings as required. These tracings include, but are not limited to, erection diagrams, overhead bridge drawings, track maps, bonding and grounding plans, catenary sectionalizing plans, impedance diagrams, and transmission profiles.

2) Four (4) mil Mylar tracings shall be prepared for all new permanent facilities such as catenary structures at overhead bridges. These drawings shall be prepared on appropriate standard Amtrak tracings – four (4) mil Mylar. Permanent drawing numbers shall be obtained from Amtrak.

3) One (1) CD ROM containing all electronic documents (except plans) in their original file format. Plans shall be submitted in AutoCAD format.

4) Unless otherwise directed, final "as-built" documents are to be sent to the following address:

R. G. Verrelle

Director ET Design & Standards

National Railroad Passenger Corporation

30th Street Station, 4th Floor South Tower- Box 41

Philadelphia, Pa 19104

VIII. APPROVALS

M. D. Insogna
Technical Director Electric Traction Design

DATE

R. J. Verhelle
Deputy Chief Engineer Electric Traction

7/10/06
DATE

CATENARY STRUCTURE LOADING, DESIGN CRITERIA, AND STANDARDS FOR USE ON THE NORTHEAST CORRIDOR AND KEYSTONE BRANCH

National Railroad Passenger Corporation

Purpose:

This document outlines the requirements for the structural design of railroad catenary structures. The intent of the information contained herein is to provide general guidelines for the uniform and consistent design of these structures where practicable.

Contact: **Effective Date: September 17, 2007**

For more information regarding this document, please contact:
Ray Verrelle, Jr. P.E.
Director of ET Design and Standards
Amtrak Engineering Department
National Railroad Passenger Corp.
30th Street Station, 4th Floor
Philadelphia, PA 19104
(215) 349-1907

Revision Record

Revision Number	Date	Description	By	Checked
0	9/17/07	Initial Issue	*NA*	*NA*

Table of Contents

SECTION 1 – GENERAL

A.	INTRODUCTION AND SCOPE	1
B.	DESIGN CODES AND REFERENCES	1

SECTION 2 – LOADING REQUIREMENTS

A.	BASIC LOADS	2
B.	WIRE DEAD LOADS	3
C.	WIND PRESSURES ON WIRES AND STRUCTURES	5
D.	LOAD COMBINATIONS AND FACTORS	5

SECTION 3 – STRUCTURAL DESIGN REQUIREMENTS

A.	GENERAL REQUIREMENTS	9
B.	BASIC DESIGN VALUES	9
C.	STANDARD COMPONENTS	11
D.	MATERIALS	14
E.	STEEL DESIGN DETAILS	15
F.	MISCELLANEOUS	16

SECTION 1 – GENERAL

A. INTRODUCTION AND SCOPE

1. This chapter prescribes criteria for the design and detailing of railroad catenary (support) structures. The design and construction of new and replacement catenary structures as well as the analysis and modification of existing structures for new loads or loading conditions shall conform to the minimum design requirements specified here-in.

2. Exemptions or exceptions to any provisions contained in this document must be authorized by Amtrak's Director of ET Design & Standards.

3. The basis for design of railroad catenary support structures shall be in accordance with AREMA Manual for Railway Engineering Chapter 33 Part 4, the National Electric Safety Code, Amtrak's AED-1, and as modified here-in.

4. Structures shall be detailed to accept Amtrak's standard catenary hardware.

5. All structures shall be grounded per NESC and NEC code requirements.

B. DESIGN CODES AND REFERENCES *(latest editions)*

1.	AREMA	Manual of Railway Engineering, Chapter 33
2.	AISC 310	Hollow Structural Sections Connections Manual
3.	AISC 325	Steel Construction Manual– 13th Edition
4.	AISC 326	Detailing for Steel Construction – 2nd Edition
5.	AISC 348	Specification for Structural Joints Using ASTM A325 or A490 Bolts
6.	NEC	National Electric Code
7.	NESC	National Electric Safety Code
8.	IBC	International Building Code
9.	ACI 318	Building Code Requirement for Structural Concrete
10.	ASCE 7	Minimum Design Loads for Buildings and Other Structures
11.	AWS D1.1	American Welding Society: Structural Welding Code – Steel

END OF SECTION

SECTION 2 – LOADING REQUIREMENTS

A. BASIC LOADS

1. The basic loads applied to new catenary structures shall be in accordance with AREMA Chapter 33 Part 4, Amtrak's AED-1, and as modified by this document. The loads include:

   (a) Dead weight of wires, wire supports, and supporting structure

   (b) Curve pull forces and dead end loads

   (c) Ice loads on the wires only

   (d) Wind loads on the wires and structure

   (e) Wire break loads

   (f) Live loads (from cat walks, ladders, etc - refer to ASCE 7)

   (g) Other loads as may be specific to the location and structure

2. Unless otherwise specified to be greater, an importance factor (I) of 1.0 shall be used for determining wind pressure on structures and supported facilities per NESC Section 25. Wind loading shall be in accordance with the provisions and requirements stated in the NESC.

3. Five (5) load conditions shall be reviewed:

   (a) Icing Condition (Or NESC Rule 250 B)
   - Temperature = 0ºF
   - 40 mph wind
   - ½ inch radial ice on all wires
   - Maximum lateral pole deflection at contact wire height = 6 inches*

   (b) Design Condition (Or NESC Rule 250 C)
   - Temperature = 60ºF
   - 90 mph wind
   - All structures and their supported facilities shall be designed to withstand the Basic Wind Speed in accordance with ASCE/SEI 7, *Minimum Design Loads for Buildings and Other Structures*, Chapter 6.0 and the National Electric Safety Code, Section 25. Based upon ASCE 7-02, Figures 6-1 and 6-1c, the basic wind speed (3 second gust) for the majority of Amtrak's Northeast Corridor is 90 mph.

   (c) Operating Condition
   - Temperature = 60ºF
   - 60 mph wind
   - Maximum lateral pole deflection at contact wire height = 4 inches*

- This combination is not used to compute member stresses, rather to compute lateral catenary support and wire deflections for the interface with the vehicle/pantograph system.

(d) Wire Break Condition

- Portal structures shall be designed to resist the unbalanced forces in the direction of the line resulting from broken wires. Two such wire break loads of not less than 1,000 pounds each shall be assumed as acting on any pole carrying transmission or signal wires or one wire break load of not less than 2,000 pounds shall be assumed as acting at any catenary attachment point to a steel member of a supporting structure. Both conditions shall be checked individually.
- Wire break loadings need not be considered as acting in conjunction with longitudinal wind forces.
- Special provisions for Cantilever Catenary Structures: Arms and arm/column connections need not be designed to resist wire break conditions. However, columns shall be designed to resist wire break loads applied to the section at the messenger wire height. Large deflection and non-elastic deformation to the arm is to be expected, however, overall structural failure shall be prohibited.

(e) Construction Condition

- The wind pressures calculated under the "Design" load case (b) shall be applied to the entire structure and supporting facilities without ice or wire wind loads. Any support or restraint provided by a wire must subsequently be removed.

**Deflection limitations stated pertain to lateral deflections at contact wire supports as it relates to pantograph registration. Overall structural deflections shall follow the recommendations and limitations stated in AISC.*

4. When modifying an existing structure the design criteria applicable to the period when the structure was originally designed may be used in lieu of requirements outlined in Part 2, Section 3.

B. WIRE DEAD LOADS

1. For the purposes of structure design, wire size and weights noted in Table 2.B-1 (following page) shall be assumed as a minimum unless larger wire sizes or heavier loads are required.

Table 2.B-1 Wire Sizes and Weights					
Wire	**Size**	**Material**	**Nominal Diameter (in)**	**Dead Load Wt lbs/linear foot**	
				Bare @ 60°F	**½" ice @ 0°F**
Messenger	5/8"	stranded bronze	0.625	0.905	1.616
	5/8"	copper weld comp.	0.613	0.848	1.53
	7/16"	bronze	0.4375	0.453	1.05
	300 MCM	copper	0.630	0.926	1.63
Trolley	4/0	solid bronze	0.482	0.642	1.260
	336.4 MCM	bronze	0.680	1.02	1.690
	300 MCM	silver copper	0.574	0.908	1.575
Auxiliary	4/0	Copper	0.482	0.642	1.260
Hangers – clips 2 wire systems 3 wire systems				0.120 0.080	0.120 0.080
Catenary Feeders	300 MCM	copper	0.714	0.945	1.70
	400 MCM	copper	0.728	1.235	1.985
	636 MCM	ACSR	0.990	0.874	1.80
	750 MCM	copper	0.998	2.316	3.25
	1000 MCM	copper	1.152	3.088	4.12
Transmission	250 MCM	copper hollow core (Type A)	0.731	0.783	1.55
	250 MCM	copper hollow core (Type NH)	0.818	0.803	1.62
	250 MCM	copper hollow core, hollow tube	0.731	0.844	1.61
	250 MCM	copper spiral I beam	0.731	0.803	1.57
	4/0	7 strand copper	0.522	0.653	1.29
	477 MCM	ACSR (26/7 "Hawk")	0.858	0.656	1.50
Signal Power	1/0	7 strand copper	0.368	0.326	0.866
Static	336.4 MCM	ACSR	0.563	0.291	0.952
	4/0	7 strand copper	0.522	0.653	1.29
	9/16"	Copperweld	0.572	0.700	1.35

C. WIND PRESSURES ON WIRES AND STRUCTURES

1. Basic wind loading equation:

   (a) Wind Pressure (lbs/ft^2) = $0.00256*(V^2)*(k_z)*(G_{RF})*(I)$
   (b) V = Basic Wind Speed for a 3s Wind Gust
   (c) k_z = Velocity Pressure Exposure Coefficient (See Table 2.C-1)
   (d) G_{RF} = Gust Response Factor (See Table 2.C-2)
   (e) I = Importance Factor (1.0)

Table 2.C-1
Velocity Pressure Exposure Coefficient, k_z

Height(ft)	k_z (Structure)	k_z (Wire)
≤ 33	0.90	1.00
33 to 50	1.00	1.10
50 to 80	1.10	1.20
80 to 115	1.20	1.30
115 to 165	1.30	1.40
165 to 250	1.40	1.50
>250	Use Formulas	Use Formulas

Formulas:

Structure: $k_z = 2.01 \times (0.67 \times h/900)^{(2/9.5)}$
Wire: $k_z = 2.01 \times (h/900)^{(2/9.5)}$

Note: ***Minimum Value for k_z is 0.85***

Table 2.C-2
Gust Response Factor, G_{RF}

Height	Structure	Wire G_{RF}, Span Length, L (ft)			
h (ft)	G_{RF}	≤ 250	250<L<500	500<L<750	500<L<750
≤ 33	1.02	0.93	0.86	0.79	0.75
33 to 50	0.97	0.88	0.82	0.76	0.72
50 to 80	0.93	0.86	0.80	0.75	0.71
80 to 115	0.89	0.83	0.78	0.73	0.70
115 to 165	0.86	0.82	0.77	0.72	0.69
165 to 250	0.83	0.80	0.75	0.71	0.68
>250	(1)	(1)	(1)	(1)	(1)

Note (1): ***Use applicable formulae provided in NESC.***

D. LOAD COMBINATIONS AND FACTORS

1. Load combinations shall be generated to meet the five (5) load conditions outlined in Section 2.A.3. Load factors need not be applied when using ASD allowable factors (see Section 3.A.1).

2. The general load combinations shall be as noted in Table 2.D-1 (following page). Other load combinations may be required by Amtrak for special structures.

Table 2.D-1 Load Combinations		
Load Case	**Combination**	**Description**
1A	0 degree F, ½" Ice, 40mph Wind Perpendicular to Tracks	Structure DL + Wire DL with 1/2" Ice + Curve Pull @ 0 deg. + Dead-end @ 0 deg. +/- 40mph wind perpendicular to tracks
1B	0 degree F, ½" Ice, 40mph Wind Parallel to Tracks	Structure DL + Wire DL with 1/2" Ice + Curve Pull @ 0 deg. + Dead-end @ 0 deg. + 40mph wind parallel to tracks
2A	60 degrees F, Bare Wire, 90mph Wind Perpendicular to Tracks	Structure DL + Bare Wire DL + Curve Pull @ 60 deg. + Dead-end @ 60 deg. +/- 90mph wind perpendicular to tracks
2B	60 degrees F, Bare Wire, 90mph Wind Parallel to Tracks	Structure DL + Bare Wire DL + Curve Pull @ 60 deg. + Dead-end @ 60 deg. +/- 90mph wind parallel to tracks
3A	60 degrees F, Bare Wire, 60mph Wind Perpendicular to Tracks (for deflection only)	Structure DL + Bare Wire DL + Curve Pull @ 60 deg. + Dead-end @ 60 deg. +/- 60mph wind perpendicular to tracks
3B	60 degrees F, Bare Wire, 60mph Wind Parallel to Tracks (for deflection only)	Structure DL + Bare Wire DL + Curve Pull @ 60 deg. + Dead-end @ 60 deg. + 60mph wind parallel to tracks
4A	0 degree F, 40mph Wind Perpendicular to Tracks, wire break	Structure DL + Wire DL + Curve Pull @ 0 deg. + Dead-end @ 0 deg. +/- 40mph wind perpendicular to tracks + 2000 pound wire break load on the beam at a catenary support that generates the worst case stresses
4B	60 degrees F, Bare Wire, 90mph Wind Perpendicular to Tracks, wire break	Structure DL + Bare Wire DL + Curve Pull @ 60 deg. + Dead-end @ 60 deg. +/- 90mph wind perpendicular to tracks + 2000 pound wire break load on the beam at a catenary support that generates the worst case stresses
4C	0 degree F, 40mph Wind Perpendicular to Tracks, wire break	Structure DL + Wire DL + Curve Pull @ 0 deg. + Dead-end @ 0 deg. +/- 40mph wind perpendicular to tracks + (2) 1000 pound wire break loads on the **pole** at a height to generate the worst case stresses (but must be where one of the crossarms are located)

4D	60 degree F, 90mph Wind Perpendicular to Tracks, wire break	Structure DL + Wire DL + Curve Pull @ 60 deg. + Dead-end @ 60 deg. +/- 90mph wind perpendicular to tracks + (2) 1000 pound wire break loads on the **pole** at a height to generate the worst case stresses (but must be where one of the crossarms are located)
5A	60 degrees F, No Support, 90mph Wind Perpendicular to Tracks	Structure DL +/- 90mph wind perpendicular to tracks (no wire support)
5B	60 degrees F, No Support, 90mph Wind Parallel to Tracks	Structure DL +/- 90mph wind parallel to tracks (no wire support)

3. Based upon the requirements of AREMA, load factors (overload) shall be applied for steel design as noted in Table 2.D-2.

Table 2.D-2
Load Factors (Overload for LRFD design)

Overload Factor	Description
1.5	Dead Load Structure including supports, signals, etc
1.5	Dead Load wires
1.0	Ice load on wires (1/2” radial)
1.65	Transverse Force due to bearing change of wires
1.65	Dead End Force
2.5	Transverse wind load on structure
1.1	Longitudinal wind load on structure
2.5	Transverse wind load on wires
1.0	Force created by wire breaking
1.6	Live Load (person on fixed ladder or platform)

4. Based upon the requirements of AREMA, wind loading shape factors C, shall be applied for steel design as noted in Table 2.D-3 (following page).

Table 2.D-3 Shape Factors, C	
Factor C	**Description**
1.0	Wires
0.8	Cylindrical Sections
1.2	H Sections
1.8	Lattice Structures
1.4	Flat Surfaces

5. Based upon the requirements of AREMA, wind loading exposure factors, E shall be applied for steel design as noted in Table 2.D-4.

Table 2.D-4 Exposure Factors, E	
Factor E	**Description**
1.25	Operating Load Condition Factor (Flat exposed areas, high embankments, viaducts)
1.5	Design Load Condition Factor (Flat exposed areas, high embankments, viaducts)
0.8*	Design & Operating Condition Factor (Sheltered areas, deep cuts, deep forests)

** Transverse (perpendicular to tracks) wind loads only*

6. Where the combination of vertical, transverse, or longitudinal loads may act simultaneously, the structure shall be designed to withstand the simultaneous application of these loads.

END OF SECTION

SECTION 3 – STRUCTURAL DESIGN REQUIREMENTS

A. GENERAL REQUIREMENTS

1. Structural steel analysis and design shall be per AISC Manual of Steel Construction, 13th edition (or latest). Either ASD or LRFD may be used.

   (a) If ASD is used, use ASD allowable limits with no overload factors.
   (b) If LRFD is used, use AREMA/NESC overload factors and AISC LRFD reductions.

2. Structural members shall be designed with consideration for additional future loading. Excess capacity to allow for such loading shall be determined using good engineering judgment.

3. Design modifications to existing structures shall be conducted using the original loading criteria. The allowable stresses shall not be greater than the design criteria in place at the time of the original design and construction. All structural members shall be designed with consideration for additional future loading based on good engineering judgment.

4. Allowable stresses shall not be increased one-third above stress values given in specifications when produced by wind loading unless it is approved by Amtrak's Director of ET Design and Standards

5. Structural Erection Diagrams (SED's) shall include a loading diagram. Loading diagrams should show Icing (0 degree, 40mph wind, ½" ice) condition along with reactions at foundation(s) and down guy(s) for both loading conditions.

6. Static wires which are permanently attached to the top of the column section are permitted (when required) to be considered a support in the longitudinal direction of the structure. The static wire shall not provide any structural support in the transverse direction.

B. BASIC DESIGN VALUES

1. Design values (taken from AISC) for structural steel design shall be used as shown in Table 3.B-1 (following page).

Table 3.B-1 Basic Steel Design Values					
Condition			***ASD***	***LRFD***	***Related Info.***
Tension			$0.6F_YA_g \le 0.5F_UA_e$	$0.9F_yA_g \le 0.75F_UA_e$	*For A_e, see LRFD Equation D3-1*
Bending	Strong Axis	$L_b \le L_p$	$0.66F_YS_X$	$0.99F_YS_X$	See Note 1. $L_p = 300r_y/(F_y)^{1/2}$ L_r and strengths when $L_b>L_r$ are given in the AISC Manual
		$L_p < L_b \le L_r$	*Use linear interpolation between L_p & L_r*		
		$L_b = L_r$	$0.42F_yS_X$	$0.63F_YS_X$	
	Weak Axis		$0.9F_YS_Y$	$1.35F_YS_Y$	
Shear (strong axis)			$0.4F_YA_W$	$0.6F_YA_W$	See Note 2.
Compression		$Kl / r \le 800/\sqrt{F_Y}$	$0.6F_YA_g \times 0.658^P$	$0.9F_YA_g \times 0.658^P$	$P = F_Y (Kl/r)^2 / 286{,}000$ See Note 3.
		$Kl / r > 800/\sqrt{F_Y}$	$150{,}000A_g/ (Kl/r)^2$	$226{,}000A_g/ (Kl/r)^2$	

Notes:

1. *Multiply equations given for $L_b \le L_p$ by value in parentheses for W14x90 (0.97), W12x65 (0.98), and W6x15 (0.95).*
2. *Multiply equations given by 0.9 for W44x230, W40x149, W36x135, W33x118, W30x90, W24x55, W16x26, W12x14 and all C and MC-shapes. In weak axis, equations given can be adapted by using $Aw = 1.8b_ft_f$*
3. *Not applicable to slender shapes. For slender shapes, use QF_Y in place of F_Y, where $Q = Q_sQ_a$ from Section E7. For C- and MC-shapes, also check Section E4.*

2. Design equations (taken from AISC) for structural steel in combined bending and compression shall be used as shown in Table 3.B-2.

Table 3.B-2 Combined Bending and Compression Stress Design Values			
Condition		***Equations***	***Related Info.***
LRFD	$P_u / \Phi_CP_n \ge 0.20$	$(P_u / \Phi_CP_n) + \{(8/9)(M_{u,x}/\Phi_bM_{n,x} + M_{u,y}/\Phi_bM_{n,y})\} \le 1.0$	See LRFD H1-1a
	$P_u / \Phi_CP_n < 0.20$	$(P_u / 2\Phi_CP_n) + (M_{u,x}/\Phi_bM_{n,x} + M_{u,y}/\Phi_bM_{n,y}) \le 1.0$	See LRFD H1-1b
ASD	$f_a / F_a > 0.15$	$(f_a / F_a) + \{(C_{mx}f_{bx})/[(1- f_a/F_{ex})(F_{bx})] + (C_{my}f_{by})/[(1- f_a/F_{ey})]\} \le 1.0$	See ASD H1-1
		$(f_a / 0.6F_y) + (f_{bx}/F_{bx}) + (f_{by}/F_{by}) \le 1.0$	See ASD H1-2
	$f_a / F_a \le 0.15$	$(f_a / F_a) + (f_{bx}/F_{bx}) + (f_{by}/F_{by}) \le 1.0$	See ASD H1-3

2. Design values for connection design (Values taken from AISC) shall be used as shown in Table 3.B-3.

Table 3.B-3
Basic Connection Design Values

	Condition		***ASD***	***LRFD***	***Related Info.***
Bolts	Tension		$0.38F_uA_b$	$0.56F_uA_b$	---
	Shear (N bolts, per shear plane)		$0.2F_uA_b$	$0.3F_uA_b$	Mult. by 1.25 for X bolts
	Slip Resistance (Class A, STD holes)		$0.14F_uA_b$	$0.21F_uA_b$	Per slip plane (see Note 1)
	Bearing		$0.6F_uL_ct \leq 1.2F_Ud_bt$	$0.9F_uL_ct \leq 1.8\ F_ud_bt$	See Note 2.
Welds	Shear (all welds except CJP)		$0.3F_{EXX}A_w$	$0.45F_{EXX}A_w$	See Note 3.
	PJP Groove Welds	Tension	$0.32F_{EXX}A_w$	$0.48F_{EXX}A_w$	See AISC Section J2.1a.
		Compression	$0.48F_{EXX}A_w \leq 0.6F_YA_{BM}$	$0.72F_{EXX}A_w \leq 0.9F_YA_{BM}$	Joint not finished to bear.
	CJP Groove Welds		Strength equal to base metal		---
Connected Parts	Tension		$0.6F_YA_g \leq 0.5F_UA_e$	$0.9F_YA_g \leq 0.75F_UA_e$	*For A_e, see LRFD Equation D3-1*
	Shear		$0.4F_YA_g \leq 0.3F_UA_n$	$0.6F_YA_g \leq 0.45F_UA_n$	---
	Block Shear		$0.3F_YA_{nv}+0.5U_{bs}F_UA_{nt}$	$0.45F_YA_{nv}+0.75U_{bs}F_UA_{nt}$	See Note 4.
	Compression	Kl/r ≤ 25	$0.6F_YA$	$0.9F_YA$	---
		Kl/r > 25	Same as for W-shapes with $A_g = A$.		

Notes:

1. *Slip checked as a serviceability limit state using ASD load combinations for ASD, LRFD load combinations for LRFD. For Class B surfaces, multiply by 1.43. For OVS or SSL holes, multiply by 0.85. For LSL holes, multiply by 0.7.*
2. *For LSL holes parallel to the direction of load, multiply by 0.83.*
3. *For fillet welds, multiply by 1.5 for transverse loading (90-degree load angle). For other load angles, see Section J2 of AISC Manual of Steel Construction.*
4. *For calculation purposes, F_uA_{nv} cannot exceed F_YA_{gv}. U_{bs} = 1 for a uniform tension stress; 0.5 for non-uniform tension stress.*

C. STANDARD COMPONENTS

1. Columns

(a) Columns shall be made from standard wide-flange or HSS sections.

(b) Built-up wide-flange sections with the use of angles can be used in overbuild design cases to strengthen weak-axis bending (improving the L/r_Y ratio) due to longitudinal wind loading. They can also be used in cantilever structure cases to strengthen regions where the in-plane wind loads create excessive torsion forces

in the member. Built-up sections shall be limited to the regions of the structure where the previously mentioned design cases dictate they be used.

(c) Pole steps shall be provided 20'-0" above top of foundation and shall be spaced 1'-3" apart to the top of the column.

(d) The columns shall be designed with a full moment base plate or direct embedment in a reinforced drilled concrete pier.

2. Catenary Beams

(a) Catenary cross beam members used in portal frame structures shall be made from standard wide flange sections or HSS sections.

(b) Cantilever arms shall be made from either WT sections or back to back angle sections.

(c) Sag braces and struts shall be used where required and should be made of back to back angles.

(d) Beams shall be shop cambered to negate the effects deflection due to self weight.

3. Signal Bridges

(a) Signal bridges shall consist of box-girder sections with a non-skid surface provided as the top plate.

(b) Handrails, ladders, and fall protection shall be designed and provided per applicable Amtrak and safety standards and codes.

4. Foundations

(a) Design per ACI 318 and the International Building Code Chapter 18.

(b) In general, foundations shall be of the drilled pier type (caisson). The use of a permanent steel casing (pipe steel) with a minimum 3/8" skin thickness and a yield strength of 35,000 psi is required for all catenary column foundations. Typical foundations shall be 48" diameter, having a depth ranging from 15'-0" to 30'-0", as required.

(c) Exploratory trenches are to be hand dug in accordance with the approved construction drawings to determine the presence of any underground installation before proceeding. These trenches are to be backfilled and immediately compacted (See Section IV of Amtrak's AED-1 for more information).

(d) Locate a 3' deep x 15" wide exploratory trenches on the design drawings. The extent of each trench shall be in the form of an "H" whose outside dimensions match the extent of the outside face of the foundation dimensions.

(e) The permanent steel casing shall extend from the bottom of the excavated hole to 0'-6" above proposed grade. Temporary forms (Neat Forms preferred) shall

be used which extend from a minimum of 0'-6" below grade to the finished top of concrete. Normally, the top of concrete shall be even with the top of high rail.

(f) In foundations where solid bedrock is encountered, the use of a reduced pile diameter (rock socket) is permissible. In these conditions the reinforcing steel in the rock socket portion of the pile shall extend into the larger section such that a full tension lap splice occurs. Shear at the socket/caisson interface must be checked.

(g) Finished concrete shall slope away from the steel with a 1% to 2% slope.

(h) Pier foundations shall contain reinforcing steel to withstand flexural bending forces created by active earth pressures. Rebar shall be deformed (uncoated) unless directed otherwise.

(i) Piers shall contain confinement reinforcing. Typically, confinement steel consists of #4 ties with a maximum spacing of 1'-0" below grade, and 0'-6" above grade. Two (2) additional #4 ties shall be placed at the top and bottom of the foundation at a maximum spacing of 4". Continuous hoops (spiraled) cages are preferred. When a continuous hoop is not used, separate hoops shall have extra ties and hoops to ensure ease of placement. Tacks welds are allowed to be used near the outer ends of the cage to assist in the rigidity of the cage, however the designer must consider the effects of embrittlement when using this method.

(j) For cast-in-place caissons, provide 3" clear cover to all reinforcing bars.

(k) Pile head deflection and slope shall be considered as it pertains to the overall structure deflection. See Section 2.A.3 for structure deflection limitations.

(l) In lieu of using foundation software (i.e. L-Pile) to determine the effects of a foundation on an embankment, the depth of foundations shall be increased per AREMA Chapter 33 Section 4.2.8.2.1. The required increase shall also be determined by calculations.

(l) Ineffective soil depth shall be taken as a minimum of 2'-0" unless soil boring information is provided which shows otherwise.

(m) Foundation design shall be done using the worst case loading condition (service loads) with a 1.5 safety factor (overturning) for caissons.

(n) Design of anchor rods shall be in accordance with the ACI-318, Building Code Requirements for Reinforced Concrete (latest edition). The minimum embedment depth for anchor rods is 6'-0".

5. Guy Anchors and Assemblies

(a) Guy anchors shall be designed using the worst case loading (service loads) with a 1.75 safety factor (sliding and uplift).

(b) Type A-1, A-2, B-1, B-2, and caisson type guy anchors are preferred.

(c) All components which come into contact with the earth or concrete shall be galvanized.

(d) Guy anchors shall be placed in a vertically dug hole which is approximately the same dimensions as the anchor. In typical soil conditions, the minimum anchor embedment depth is 10'-0". In unstable conditions, areas of weak soil, high water tables, and/or areas susceptible to erosion a more detailed analysis must take place to determine the required embedment depth.

6. Cross Arms

(a) 132-kV Transmission Arms are generally single 4x4x1/2" single steel angles for suspension assemblies and double 4x4x1/2" angles for dead-end assemblies and shall be bolted to the pole. 7/8" diameter steel sag rod shall be provided for all arms and shall be clamped to the pole.

(b) Signal Power Feeder Arms are generally single 4x4x1/2" single steel angles for suspension assemblies and double 4x4x1/2" angles for dead-end assemblies and shall be clamped to the pole. 7/8" diameter steel sag rod is not required.

(c) Cross Track Feeder Arms are generally double 4x4x1/2" angles, with struts, clamped to the pole.

(d) Catenary Power Feeder Arms are generally double 4x4x1/2" angles. 7/8" diameter steel sag rod shall be provided for all arms and shall be clamped to the pole.

(e) Double dead-ends shall always be provided for long-term flexibility unless directed otherwise.

(f) All parts shall be galvanized.

7. Overhead Bridges

(a) Wherever possible catenary connections to overhead bridges should be avoided. If required, they should consist of a 4" diameter galvanized steel pipe clamped by u-bolts to dropper brackets which are welded or bolted to the bridge. Prior approval from Amtrak's Engineering Department must be granted prior to attaching any catenary to an overhead bridge.

8. Miscellaneous Steel

(a) Ladders for plain poles shall be provided when required. Anti-climb gates shall be provided on all ladders and shall extend fifteen-feet above the top of foundation or grade, whichever is higher.

(b) Railings shall meet all current safety regulations.

D. MATERIALS

1. The steel material requirements of AREMA Chapter 15 Section 1.2 apply to railroad catenary structures as modified here-in. All other steel structures shall comply with AISC requirements except as modified here-in.

2. Fabrication of steel structures shall be in accordance with AISC as modified here-in. Third party fabrication shops shall be AISC certified or have demonstrated experience with the fabrication of catenary structures.

3. Galvanized steel is the preferred material for exposed applications.

4. The recommended steel material specifications are listed in Table 3.D-1.

Table 3.D-1
Steel Material Specifications

Shape/Item	Material Specification
W- Shapes	ASTM A992 Grade 50 Hot Dip Galvanized
Hollow Structural Shapes	ASTM A500 Grade B Hot Dip Galvanized
Shapes and plates not embedded in concrete	ASTM A36 Hot Dip Galvanized
Shapes and plates embedded in concrete	ASTM A36 Hot Dip Galvanized
Welding Electrodes	E70xx low hydrogen (tensile strength F_{EXX} = 70 ksi)
High Strength Bolts	ASTM A325 Type 1 galvanized
Standard Hardened Washers	ASTM F436 Type 1 Hot Dip Galvanized
Heavy Hex Nuts	ASTM A563 Grade DH galvanized
Anchor Bolts or Rods	ASTM A449, Hot Dip Galvanized
Hardware	AISI C-1035 for clevises and turnbuckles. Turnbuckles shall be manufactured per ASTM F1145. AISI C-1030 for eye nuts and steel eye bolts. AISI C-1018 grade 2 for sleeve nuts. Cotter pins shall be stainless steel or bronze. All shall be Hot Dip Galvanized

5. Concrete shall be 4000psi at 28 days with a minimum w/c ratio of 0.45 minimum 5½% air content (if required).

6. Reinforcing steel shall be grade 60.

E. STEEL DESIGN DETAILS

1. Minimum plate thickness and member thickness is ⅜ inch.

2. Anchor Rods and Base Plates

   (a) Holes in base plates for anchor rods shall be oversized. Recommended oversize is 5/16” but shall not exceed AISC Code of Standard Practice.

   (b) Minimum diameter of anchor rods is 1¼ inch. The recommended diameter is 2 inches.

   (c) Each anchor bolt shall include two heavy hex nuts and a leveling nut.

   (d) Provide plate washers where oversize holes are provided.

(e) Welding on anchor rods will only be allowed in the bottom 12 inches.

(f) The minimum embedment length of anchor rods is 6'-0".

(g) Anchor rods shall be threaded at the top end a distance sufficient to provide for leveling or raking of the structure

(h) The minimum thickness of base plates is 1". For cantilever structures, the minimum thickness is 1½". The recommended baseplate thickness is 2".

F. MISCELLANEOUS

1. All steel structures shall be grounded.

2. Galvanized coating thickness for structural members shall not be less than 2.3 oz/sf.

3. Provisions for the attachment of a static wire shall be provided on the top of all columns.

4. The catenary structure number shall be permanently marked on the inbound and outbound faces of all columns at four feet above groundline using reflective paint or signs.

5. Cadwelded grounding is an acceptable alternative to the grounding pad/lug.

6. The location of structures shall not violate the minimum railroad clearance requirements per MW1000.

END OF SECTION

Appendix A

Index of Tables

Table Number	Description	Page Number
2.B-1	Wire Sizes and Weights	4 of 16
2.C-1	Velocity Pressure Exposure Coefficient, k_z	5 of 16
2.C-2	Gust Response Factor, G_{RF}	5 of 16
2.D-1	Load Combinations	6 of 16
2.D-2	Load Factors (Overload for LRFD design)	7 of 16
2.D-3	Shape Factors, C	8 of 16
2.D-4	Exposure Factors, E	8 of 16
3.B-1	Basic Steel Design Values	10 of 16
3.B-2	Combined Bending and Compression Stress Design Values	10 of 16
3.B-3	Basic Connection Design Values	11 of 16
3.D-1	Steel Material Specifications	15 of 16

C.E. 4
March 1997

SPECIFICATIONS

FOR

WIRE, CONDUIT AND CABLE OCCUPATIONS

OF

NATIONAL RAILROAD PASSENGER CORPORATION

PROPERTY

INDEX

	SUBJECT	PAGE NO.
1.	SCOPE	1
2.	APPLICATION	1
3.	APPROVAL OF PLANS	1, 2, 3
4.	CONSTRUCTION REQUIREMENTS	3
5.	LONGITUDINAL OCCUPATIONS	4
6.	INDUCTIVE INTERFERENCE	4

APPENDIX

PLATE I	5
PLATE II	6
PLATE IIA	7
PLATE III	8
PLATE IV	9
PLATE V	10

1. SCOPE:

A. These specifications apply to the design of electric transmission wires, cables, and conduits (power or communication) which are to be located over, under, across or upon Railroad property and facilities and tracks owned by others over which the Railroad operates its equipment.

2. APPLICATION FOR OCCUPANCY

A. Individuals, corporations, municipalities (known as the owner) desiring occupancy of Railroad property by such wire, cable, or conduit occupations must agree, upon approval of the construction drawings by the Office of the Chief Engineer of the Railroad, to execute an appropriate occupational agreement and pay any required fees and/or rentals outlined therein.

B. Application for an occupancy shall be by letter addressed to:

Commercial Development
National Railroad Passenger Corporation
30th and Market Streets, 5th Floor South
Philadelphia, PA 19104

giving the following:

1) Name of individual, corporation or municipality desiring the occupancy.

2) Complete mailing address of applicant.

3) Name and title of person who will sign the agreement.

4) The State in which the applicant is incorporated.

C. All applications shall be accompanied with eight (8) copies of all construction plans and three (3) copies of specifications and computations concerning the proposed occupancy.

3. APPROVAL OF PLANS

A. No entry upon Railroad property for the purpose of conducting surveys, field inspections, obtaining soil information, or any other purpose associated with the design and engineering of the proposed occupancy, will be permitted without a proper entry permit (Form CR-17) prepared by the office of the Chief Engineer of the Railroad and executed by the applicant. It is to be clearly understood that the issuance of such a permit does not constitute authority to proceed with the actual construction which cannot begin until a formal agreement is finally executed by the Railroad Company and permission is received by the owner from the designated inspection agency of the Railroad to proceed.

B. Plans for proposed wire, cable, or conduit occupations shall be submitted to and meet the approval of the Chief Engineer of the Railroad prior to start of construction. These plans are to be prepared in sizes as small as possible and are to be folded to an 8½ inch by 1 inch size (folded dimensions) with a 1½ inch margin on the left-hand side and a 1 inch margin on the top so that they can be secured in a file at the upper left-hand corner and still be unfolded to full size without being removed from the file.

Also, after folding, the title block and other identification of the plans shall be visible without the necessity of unfolding at the lower right-hand corner. Each plan shall bear an individually identifying number and an original date, together with subsequent revision dates, clearly identified on the plan so as to be readily apparent as to just what revisions were made and when.

All plans are to be individually folded and where more than one plan is involved, they shall be assembled into complete sets before submission to the Railroad.

C. Plans shall be drawn to scale and show the following:
(See Plates I, II, IIA, III, IV and V, hereto attached)

1) Plan review of crossing or occupation in relation to all Railroad facilities (See Plate I).

2) Location of wire, cable, or conduit (in feet) from nearest Railroad Mile Post, centerline of a Railroad bridge (giving bridge number), or center line of an existing or former passenger station. In all cases, the name of the County in which the proposed facilities are located must be shown. In States where Townships, Ranges and Sections are used, give distance in feet to the nearest Section line and identify the Section number, Township and Range.

3) Profile of ground on center line of pole or tower line, showing clearances between top of rail and bottom of sag, as well as clearances from bottom wire or cable to top wire or cable of the Railroad's static , transmission, signal , trolley feeder and communication lines, catenary, and third rail, when present. If none of these facilities are in existence at the point of crossing, the plan should so indicate. Actual under-clearances are to be shown (See Plate V for the minimum required clearances in non-electrified territory).

4) Show all known property lines. If wires, cables or conduits are within public highway limits, such limits should be clearly indicated with dimensions from center line.

5) The plan must be specific, as to:

   a. Base diameter, height, class and bury of poles. Poles shall be set no closer than 18'-0" from face of pole to center line of nearest track. When necessary, however, each location will be analyzed to consider speed, traffic, etc.

   b. Number of size, and material of power wires, as well as number of pairs in communication cables.

   c. Nominal voltage of line.

   d. Number of, location, size of, material of anchors and all guying for poles and arms.

NOTES: Double cross-arms and deadends with backguys are required on poles adjacent to track where wires or cable are crossing tracks (See Plate IIA). Any tower designs must be accompanied by engineering computations and data.

4. CONSTRUCTION REQUIREMENTS

A. Power and communication lines shall be constructed in accordance with Amtrak's Electrification Standards and "Safety Rules for the Installation and Maintenance of Electric Supply and Communication Lines, National Electrical Safety Code Handbook", (current issue). Casing pipes to contain power or communication wires or cables having an outside diameter of over four (4) inches shall be constructed in accordance with the current issue of Amtrak's "Requirements and Specifications for Pipeline Occupancy", USA, ENG 1604 dated November 1987.

B. Under special conditions, Railroad will give consideration to occupations on its catenary structures, subject to the approval of the Chief Engineer, and the Railroad's policy governing such matters.

5. LONGITUDINAL OCCUPATIONS

Wires and cables running longitudinally along Railroad right of way shall be constructed as close to Railroad property lines as possible. For electrical power wires and cables with voltages of 34,500 or over and communication cables containing over 1800 pairs, the following information must be submitted in addition to the detail of the pole to configuration as called for on Plate IV of these specifications:

a. Voltage of circuit(s) or number of pairs.
b. Phase of electrical circuit(s).
c. Number of electrical circuits.
d. Size (AWG or CM) and material of wires or cables.
e. Length of spans clearly indicated on drawing.

Any facilities overhanging Railroad property must have approval of the Railroad and appropriate rental charges will be applied.

6. INDUCTIVE INTERFERENCE

On agreements covering occupations, provisions will be included that the applicant will conduct appropriate EMI/EMF studies and provide appropriate remedies, at his own expense, to correct any inductive interference with Railroad facilities.

PLATE I C.E. 4
2/10/97

INFORMATION TO BE SHOWN ON PLAN SECTION OF DRAWINGS

WHEN FACILITY IS A CROSSING

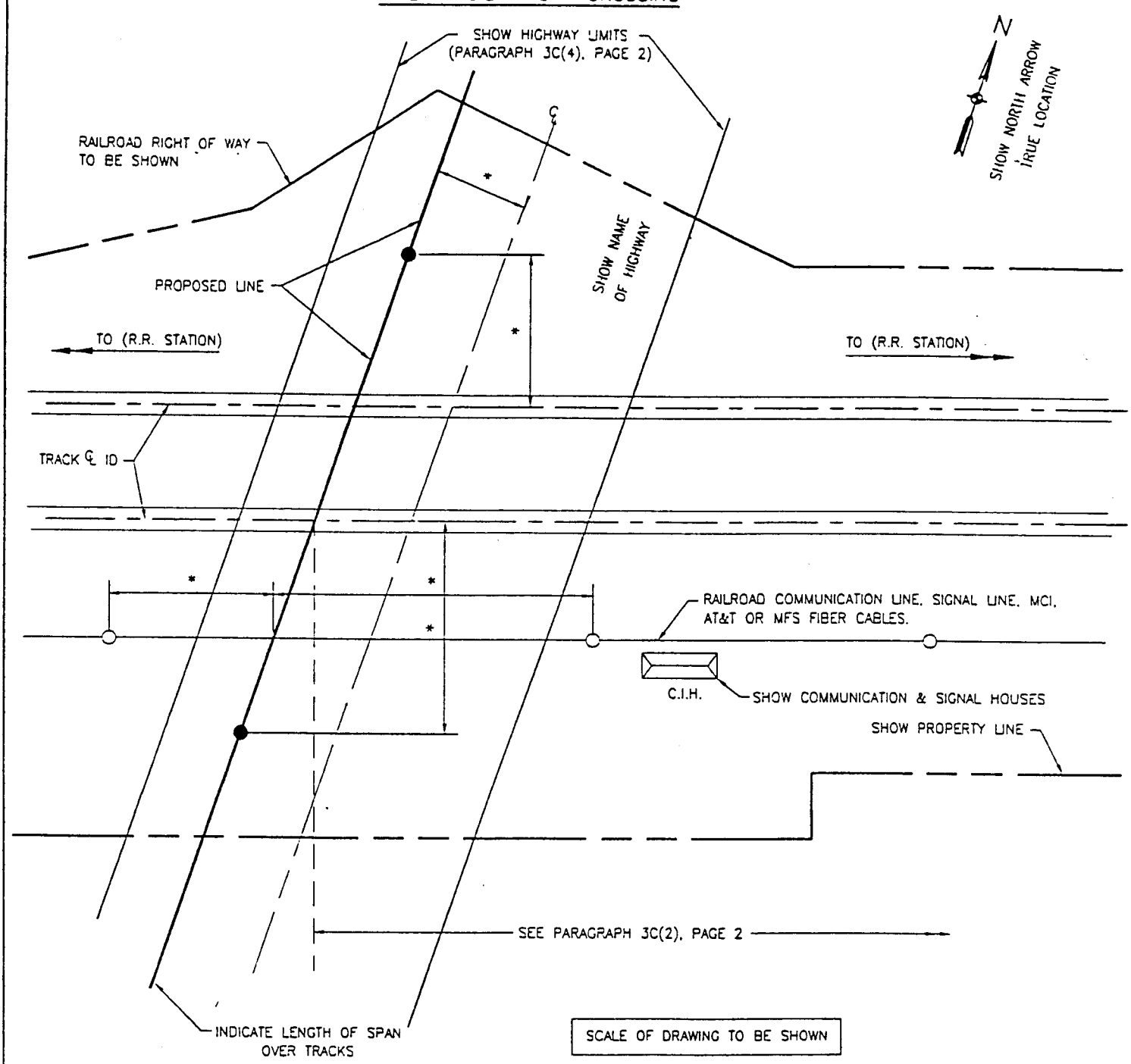

NOTE:

ALL RAILROAD ELECTRIFICATION FACILITIES MUST BE SHOWN IN RELATION TO PROPOSED LINE.

IF THE PROPOSED LINE IS TO SERVE A NEW DEVELOPMENT, A MAP SHOWING THE AREA IN RELATION TO ESTABLISHED AREAS AND ROADS IS TO BE SENT WITH THE REQUEST.

IF THE PROPOSED LINE IS NOT WHOLLY (OR PARTIALLY) WITHIN HIGHWAY LIMITS, THE SAME INFORMATION IS REQUIRED AS SHOWN ON THIS PLATE.

* DIMENSIONS TO BE SUPPLIED BY OWNER

File:PLATE2X.dwg Plot @ 1:1.5

Amtrak

OFFICE OF
V.P., Chief Engineer
Engineering

National Railroad Passenger Corporation
30TH Street Station–Philadelphia, Pennsylvania 19104

Approved	Date
A.C.E. Electric Traction	
BY:	
Director Electric Traction	
BY:	

C.E. SPECIFICATIONS
STANDARD CLEARANCES FOR WIRES HIGHWAY CROSSING RAILROADS

Designed E/T	Drawn BJT	Checked RGV	Date 2-11-97

PLATE II C.E. 4 2/10/97

INFORMATION TO BE SHOWN ON PROFILE SECTION OF DRAWINGS IN CASES OF CROSSING NON-ELECTRIFIED RAILROADS

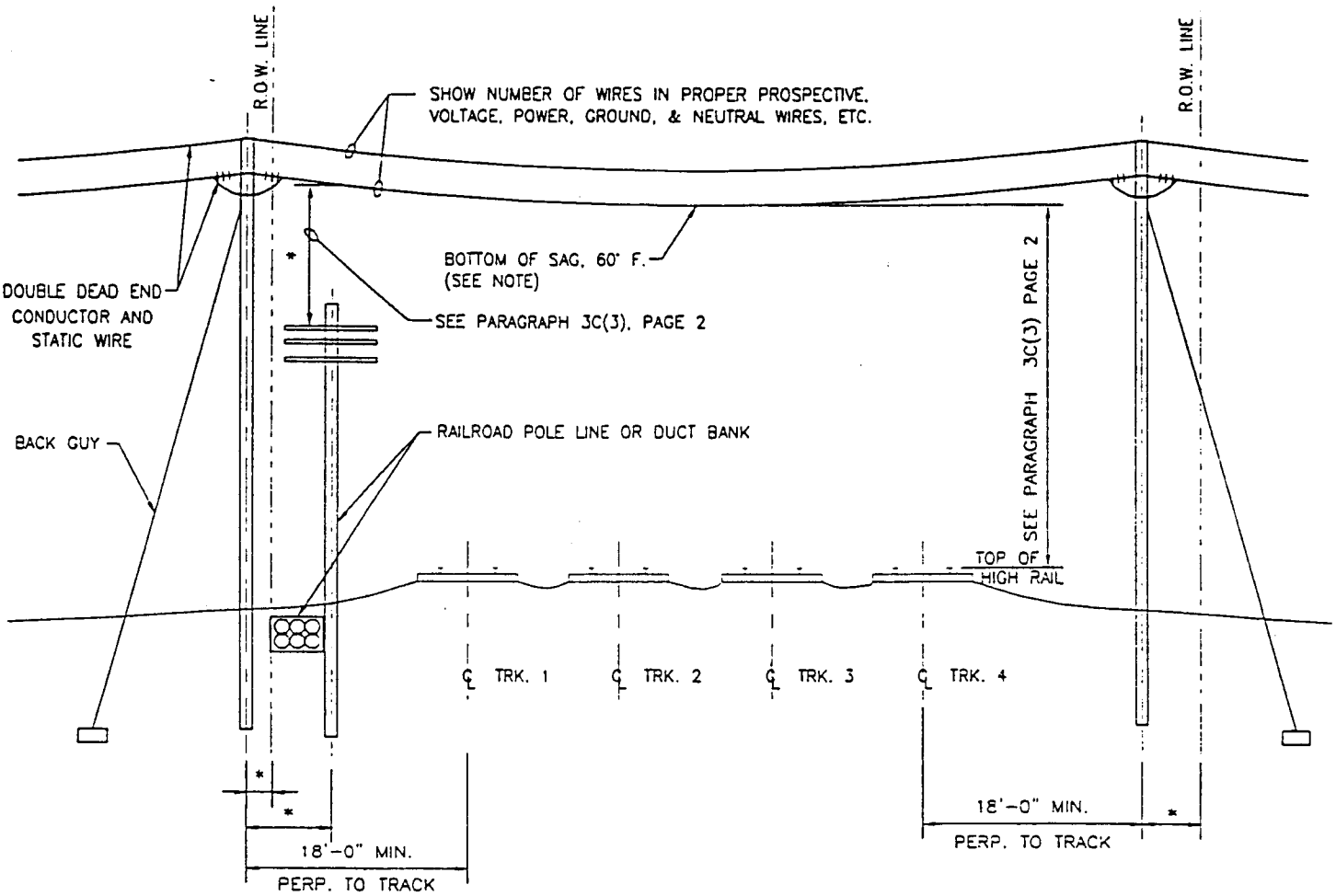

SECTION LOOKING_____(DIRECTION)

SCALE: H_____

SCALE: V_____

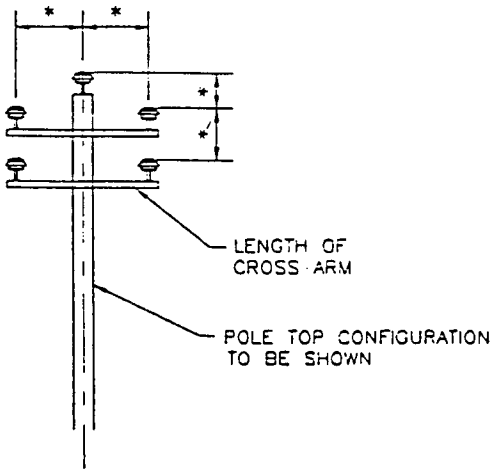

NOTES:

1. ALL TRANSMISSION, STATIC, CATENARY, FEEDERS, COMMUNICATION LINES AND THIRD RAIL SHOULD BE INDICATED AND THE PROPER CLEARANCES SHOWN. (SEE PLATE IIA)
2. SHOW MAXIMUM SAG INCREASE OF POWER WIRES OVER TRACKS IF THE SPAN EXCEEDS 175 FEET IN LENGTH.
3. DOUBLE DEAD END ALL CROSSING WIRES ON BOTH SIDES OF THE RAILROAD AND PROVIDE BACK GUYS AWAY FROM THE RAILROAD.

* DIMENSIONS TO BE SUPPLIED BY OWNER

File PLATE2X.dwg Plot 09 11 15

Amtrak

OFFICE OF V.P., Chief Engineer Engineering

National Railroad Passenger Corporation
30TH Street Station–Philadelphia, Pennsylvania 19104

Approved	Date
A.C.E. Electric Traction	
BY:	
Director Electric Traction	
BY:	

C.E. SPECIFICATIONS
STANDARD CLEARANCES FOR WIRES CROSSING NON-ELECTIFIED RAILROADS

Designed E/T	Drawn BJT	Checked RCV	Date 2-11-97

INFORMATION TO BE SHOWN ON PROFILE SECTION OF DRAWINGS IN CASES OF CROSSING ELECTRIFIED RAILROADS

PLATE IIA C.E. 4
2/10/97
REV. 9/16/97

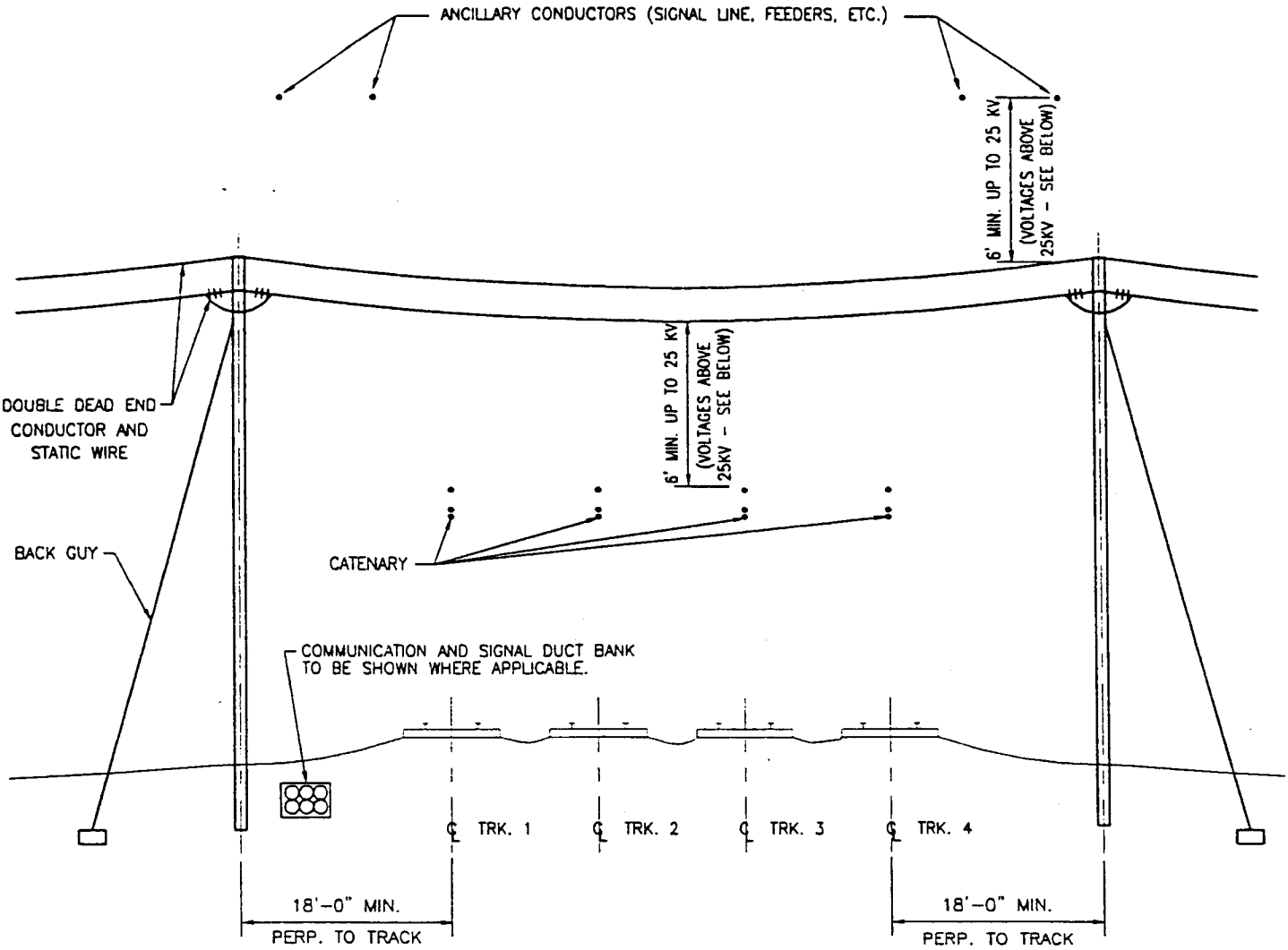

TYPICAL ARRANGEMENT OF RAILROAD CONDUCTORS

WIRE CLEARANCES FOR VOLTAGES ABOVE 25 KV	
VOLTAGE	MINIMUM VERTICAL CLEARANCE (TOP OF CONDUCTOR TO BOTTOM OF SAG)
34,500	8'-6"
69,000	9'-6"
115,000	11'-6"
138,000	12'-0"
230,000	15'-0"
345,000	19'-0"
500,000	24'-0"
745,000	32'-6"
765,000	33'-0"

NOTES:

1. MINIMUM CLEARANCE IS CALCULATED AT WORST CASE WIRE SAG. (RESULT OF MAXIMUM OPERATING TEMPERATURE, ICE LOADING, ETC.)
2. THE ABOVE DIAGRAM SHOWS A TYPICAL UTILITY CROSSING ON THE NEW YORK TO WASHINGTON CORRIDOR. ALL UTILITY CROSSINGS ON THE NORTHEND ELECTRIFICATION PROJECT WILL BE ABOVE THE HIGHEST RAILROAD CONDUCTOR.
3. STEEL POLES OR TOWERS THAT CAN SUPPORT BROKEN CONDUCTOR LOADS MAY NOT NEED TO BE GUYED PENDING APPROVAL FROM AMTRAK.

File:PLATE2X.dwg Plot @ 1:1.5

Amtrak

OFFICE OF
V.P., Chief Engineer
Engineering

National Railroad Passenger Corporation
30TH Street Station–Philadelphia, Pennsylvania 19104

Approved	Date
A.C.E. Electric Traction	
BY:	
Director Electric Traction	
BY:	

C.E. SPECIFICATIONS
STANDARD CLEARANCES FOR WIRES CROSSING ELECTRIFIED RAILROADS

Designed E/T	Drawn BJT	Checked RGV	Date 2-11-97

PLATE III C.E. 4
2/10/97

INFORMATION TO BE SHOWN ON PLAN SECTION OF DRAWINGS IN CASES OF LONGITUDINAL OCCUPATIONS

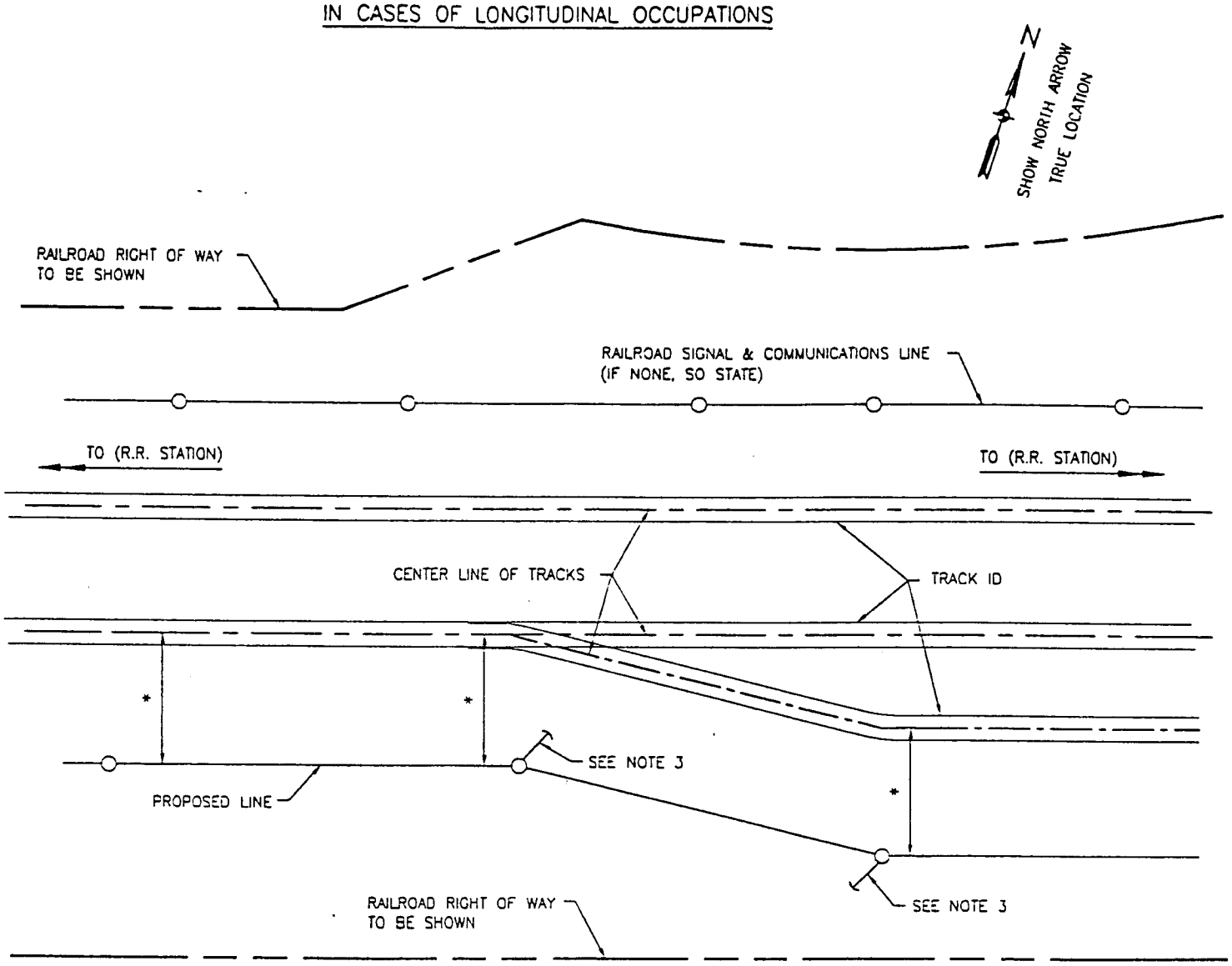

SCALE OF DRAWING TO BE SHOWN

NOTE:

(1) EACH END OF THE LINE MUST SHOW MEASUREMENTS AS CALLED FOR IN PARAGRAPH 3C(2), PAGE 2

(2) IF POWER LINE CROSSES ANY TRACK, THEN THE INFORMATION SHOWN ON PLATE 1 IS ALSO REQUIRED.

(3) WHERE ANCHOR GUYS ARE REQUIRED, SEE PARAGRAPH 3C(3), PAGE 2.

(4) THE DISTANCE BETWEEN EACH POLE IS TO BE SHOWN.

(5) ASSIGNED POLE NUMBERS TO BE SHOWN AT EACH POLE.

* DIMENSIONS TO BE SUPPLIED BY OWNER

File:PLATE2X.dwg Plot @ 1:1.5

Amtrak

V.P., OFFICE OF Chief Engineer Engineering

National Railroad Passenger Corporation
30TH Street Station–Philadelphia, Pennsylvania 19104

Approved	Date
A.C.E. Electric Traction	
BY:	
Director Electric Traction	
BY:	

C.E. SPECIFICATIONS
STANDARD INFORMATION FOR WIRES IN CASES OF LONGITUDINAL OCCUPATIONS

Designed E/T | Drawn BJT | Checked RGV | Date 2-11-97

PLATE IV C.E. 4
2/10/97

INFORMATION TO BE SHOWN ON PROFILE SECTION OF DRAWINGS IN CASES OF LONGITUDINAL OCCUPATIONS

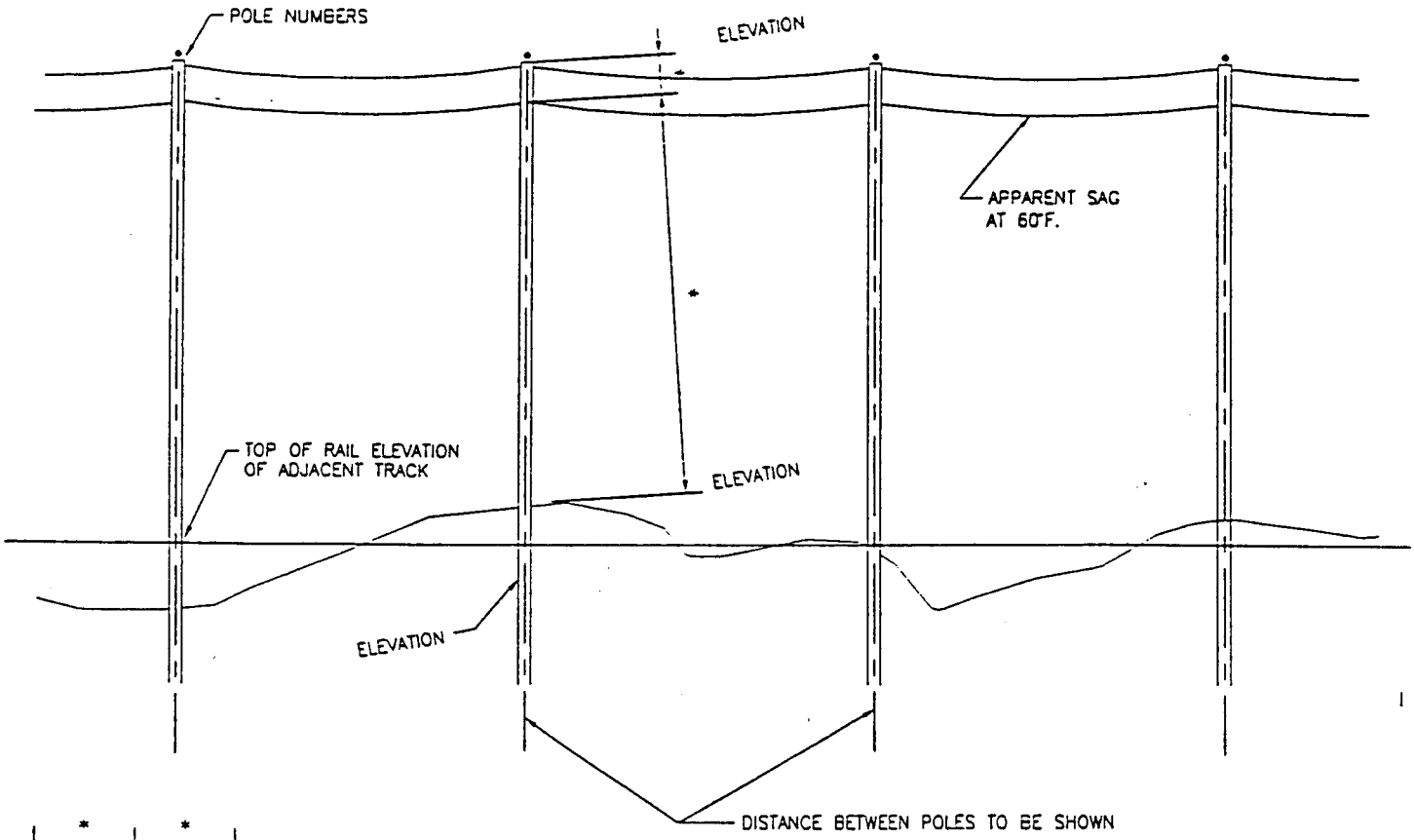

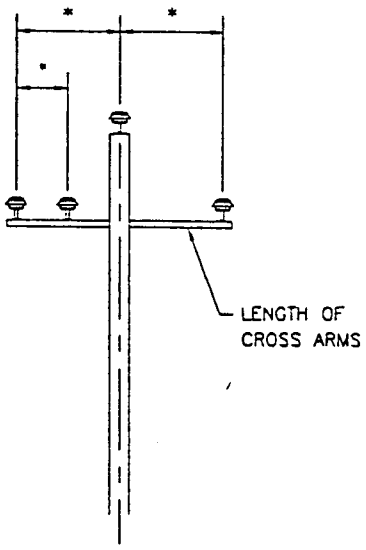

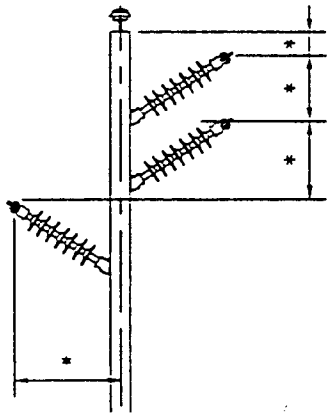

POLE TOP CONFIGURATION TO BE SHOWN SIMILAR TO SAMPLES ABOVE

NOTE:

IF POWER LINE CROSSES ANY TRACK, THEN INFORMATION SHOWN ON PLATE II IS ALSO REQUIRED.

* DIMENSIONS TO BE SUPPLIED BY OWNER

File:PLATE2X.dwg Plot @ 1:1.5

Amtrak

OFFICE OF V.P., Chief Engineer Engineering

National Railroad Passenger Corporation
30TH Street Station-Philadelphia, Pennsylvania 19104

Approved	Date
A.C.E. Electric Traction	
BY:	
Director Electric Traction	
BY:	

C.E. SPECEFICATIONS
STANDARD CLEARANCES FOR WIRES IN CASES OF LONGITUDINAL OCCUPATIONS

Designed RGV | Drawn RGV | Checked RGV | Date 2-10-97

PLATE V C.E. 4 2/10/97

NON – ELECTRIFIED TERRITORY

VOLTAGE	OVERHEAD CLEARANCE (TOP OF RAIL TO BOTTOM OF SAG)
0–750	27'–0"
751–15,000	28'–0"
15,001–50,000	30'–0"
69,000	30'–8"
115,000	32'–2"
138,000	33'–0"
345,000	39'–10"
500,000	45'–0"
745,000	53'–2"
765,000	53'–10"

CALCULATION IS 30'–0" + 0.4" PER 1,000 VOLTS OVER 50,000 VOLTS

File:PLATE2X.dwg Plot @ 1:1.5

Amtrak

OFFICE OF V.P., Chief Engineer Engineering

National Railroad Passenger Corporation
30TH Street Station–Philadelphia, Pennsylvania 19104

Approved	Date
A.C.E. Electric Traction	
BY:	
Director Electric Traction	
BY:	

C.E. SPECFICATIONS
STANDARD CLEARANCES FOR WIRE CROSSINGS, NON–ELECTRIFIED TERRITORY

Designed E/T | Drawn BJF | Checked RCV | Date 2-11-97

ARRANGEMENT OF CONTENTS

Section		Page No.
101	Scope and Purpose	1
102	Industry Standards	1
103	General	1
104	Material and Workmanship	2
105	Marking	3
106	Class A Bronze for Hot Working . . .	3
107	Class B Bronze for Cold Working . . .	4
108	Class C Bronze for Carriage Bolts . .	5
109	Copper Tubes and Bars	6
110	Tests for Rods	6
111	Tests for Bolts, U-Bolts, and J-Bolts	7
112	Tests for Tubes and Bars	9

C.E. 565-(a)
7½ x 9½
500 12-4-30

CE565-A

THE PENNSYLVANIA RAILROAD

SPECIFICATION

FOR

NON-FERROUS RODS, BOLTS, TUBES, BARS, AND FORGINGS

101. Scope and Purpose

(a) This specification covers the manufacture and test of high-strength, corrosion-resisting bronze for cold working and hot forging, and copper for tubes and bars, except as noted in paragraph (b) of this section.

(b) For applications on portions of the Railroad outside of electrified territory, where the high strength bronze of this specification may not be required, bronze in accordance with A. S. T. M. specifications may be used.

(c) General definitions, conditions of purchase, inspection, tests, shipment, guarantee, and like subjects shall be in accordance with Specification C.E. 503, Prefix to Specifications for Apparatus and Materials, which is hereby made a part of this specification.

102. Industry Standards

(a) All material ordered under this specification, unless otherwise stated herein or in the purchase order, shall conform to all applicable provisions of the latest standards of the American Standards Association and the American Society for Testing Materials.

103. General

(a) The bronze material shall be in accordance with the chemical and physical requirements of Section 106 for Class A bronze, Section 107 for Class B bronze, or Section 108 for Class C bronze as required. It shall be free from imperfections not consistent with the best commercial practice.

(b) For the purpose of calculating weights, cross-section, etc., the specific gravity of the bronze shall be taken at 8.75 at 20 degrees centigrade.

(c) The copper material shall have a purity of at least 99.88 per cent as determined by electolytic assay, silver being counted as copper.

(d) Corrosion-resisting properties shall be approved by the Railroad.

(e) All tolerances for rods, tubes, and bars shall conform to A. S. T. M. specifications as they apply.

104. Material and Workmanship

(a) Bolts shall conform to details shown on the drawing or drawings specified on the order.

(b) The heads of all bolts shall be neatly formed, free from large projecting fins, with no nicking or reduction of the size of the body of the bolt by dies.

(c) Reentrant corners shall have small fillets to prevent high stress concentrations.

(d) Hexagonal head bolts, U-bolts, and J-bolts shall be made of Class B bronze.

(e) Nuts shall be hexagonal American Standard Regular with National Coarse Threads of a Class 2 fit unless otherwise specified on the drawing.

(f) Nuts shall be made of Class B bronze.

(g) Nuts shall develop the full strength of the threaded section of the bolt.

(h) Threads of hexagonal head bolts, U-bolts, and J-bolts may be rolled or cut, unless a specific method is shown on the drawings.

(i) Carriage bolts shall be made of Class C bronze.

(j) Threads of carriage bolts shall be rolled.

(k) Bronze tubes shall be made of Class B material.

(l) Copper tubes shall be seamless.

(m) Bronze bars shall be made of Class B material.

(n) Bronze rods shall be made of Class B material.

105. Marking

(a) Heads of bolts shall be marked with the Manufacturer's trade mark, initials, or other accepted identification.

(b) U-bolts and J-bolts shall be marked on the ends before threading, with suitable identification mark of the Manufacturer.

106. Class A Bronze for Hot Working

(a) Chemical Requirements

Material	Per Cent Minimum	Per Cent Maximum
Copper	94.80	
Silicon	2.70	3.75
Tin		0.75
Manganese		1.50
Zinc		1.75
Iron		1.60
Lead		0.05

Sum of all the above elements shall be not less than 99.5 per cent.

(b) Physical Requirements

Tensile Strength, minimum in lbs. per sq. in.	52,000
Yield Point, minimum lbs. per sq. in. (Stress corresponding to 0.5 per cent strain)	18,000
Elongation in 2 in. minimum in per cent	45

107. Class B Bronze for Cold Working

(a) Chemical Requirements

Material	Per Cent Minimum	Per Cent Maximum
Copper	96.5	
Silicon		2.90
Tin		2.50
Silicon plus Tin		3.00
Manganese		0.50
Zinc		1.25
Iron		0.70
Lead		0.05

Sum of all the above elements shall be not less than 99.5 per cent.

(b) Physical Requirements - Rods, Bolts, & Bars

	Diameter or Distance Between Parallel Faces	
	Up to 1/4 in.	Over 1/4 in.
Tensile Strength, minimum lbs. per sq. in.	60,000	60,000 *
Elongation in 2 in.-minimum per cent	8	15
Number of twists in 10 inches	8	8

* Except nut stock

(c) Physical Requirements - Tubes

Nominal Diameter	Outside Diameter Inches	Wall Thickness Inches	Weight Lbs. Per Foot	Minimum Tensile Strength Lbs. Per Sq. In.	Minimum Elongation Per Cent in 10 Inches
3/4" IPS	1.050	0.113	1.25	60,000	3.00
1 5/8" OD	1.625	0.109	2.01	max 60,000	3.00
2" OD	2.000	0.180	3.79	60,000	3.00

ASTM C651000
B315-06, H50
TEMPER

B-315-06,
H50 Temper

108. Class C Bronze for Carriage Bolts

(a) Chemical Requirements

	Per Cent Minimum	Per Cent Maximum
Total of Tin & Copper	99.50	
Tin	1.10	1.60
Zinc		0.30
Total of Other Elements		0.20

(b) Physical Requirements

Tensile Strength, minimum-lbs. per sq. in.	60,000
Elongation in 2 inches - minimum per cent	15
Number of twists in 10 inches	8

109. Copper Tubes and Bars

(a) Physical Requirements

Nominal Diameter	Outside Diameter Inches	Wall Thickness Inches	Weight Lbs. Per Foot	Minimum Tensile Strength Lbs. Per Sq. In.	Minimum Elongation Per Cent in 10 Inches
1 1/8" OD	1.125	0.109	1.35	40,000	5.00
1 1/4" IPS	1.660	0.146	2.69	40,000	5.00
1 1/2" OD	1.500	0.065	1.14	40,000	5.00
4" IPS	4.500	0.250	12.94	30,000 *	10.00 *

* After annealing

110. Tests for Rods

(a) Twist and Bend Tests

For the purpose of determining and developing defects which may be prejudical to the life of the rod, twisting and bending tests shall be made upon one sample of rod selected by the Inspector from each lot of 200 rods. Twist tests shall be made upon samples ten inches in length between jaws. The twisting machine shall be so constructed that there is a linear motion of the tail stock with respect to the head. The twist shall be applied not faster than ten turns per minute. All samples shall be twisted to destruction and shall not reveal under this test any seams, pits, slivers, or surface imperfections not consistent with the best commercial practice.

At the time of fracture the rod shall be twisting with reasonable uniformity. Samples of rod must withstand at least the number of twists called for in Section 107(b) before breaking. Rods shall bend through an angle of 360 degrees about their own diameter, without a sign of cracking.

(b) Tensile and Elongation Tests

1. Tensile and elongation tests shall be made upon one sample of rod selected by the Inspector from each lot of 200 rods.

2. The elongation of the specimen shall be determined as the permanent increase in length due to the breaking of specimen in tension, measured between gage marks originally placed upon the specimen ten inches apart. The fracture shall be between the gage marks and not closer than one inch to either gage mark.

(c) Special Test

When considered necessary by the Inspector, material to be used in cold working operation shall be subjected to the following test:

The rod shall be cold-headed at both ends to the form intended for use. The heads thus formed shall develop the full specified strength of the rod. Heads shall not crack when struck a sharp blow with a hammer.

111. Tests for Bolts, U-Bolts, and J-Bolts

(a) Twist and Bend Tests

Twisting and bending tests shall be made upon one sample of rod selected by the Inspector from each lot of bolt stock formed from each bronze billet. Twisting tests shall be made upon samples ten inches in length between the jaws of the twisting machine. The twisting machine shall be so constructed that there is a linear motion of the tail stock with respect to the head. The twisting shall be applied not faster than ten turns per minute. All samples shall be twisted to destruction and shall not reveal under this test any seams, pits, slivers, or surface imperfections not consistent with the best commercial

practice. At the time of fracture the rod shall be twisting with reasonable uniformity. Samples of rod must withstand at least the number of twists called for in section 107(b) before breaking. Rods shall bend through an angle of 360 degrees about their own diameter, without a sign of cracking.

(b) Tensile and Elongation Tests

Tensile and elongation tests shall be made upon one sample of bolt stock selected by the Inspector from each billet. Bolts shall develop a tensile strength at the net section of the thread equal to that specified for the material. Nuts shall be made of similar material and shall develop the full strength of the threaded section. The elongation of the specimens shall be determined as the permanent increase in length due to breaking of specimen in tension, measured between gage marks placed originally upon the specimen two inches apart, when the fracture occurs in the middle third of the distance between the gage marks.

(c) "Nick and Break" Test

The two ends of the bolt stock formed from a bronze billet which is to be made into bolts covered by this specification shall be given a "nick and break" test to determine that there are no "pipes" in the stock. By "pipe" is meant a separation of the material within the bolt stock which may have been caused during the pouring of the billet.

(d) Special Test

When considered necessary by the Inspector, material to be used in cold working operation shall be subjected to the following test:

The rod shall be cold-headed at both ends to the form intended for use. The heads thus formed shall develop the full specified strength of the rod. Heads shall not crack when struck a sharp blow with a hammer.

112. Tests for Tubes and Bars

(a) Tensile and Elongation Tests - Tubes

1. Tensile and elongation tests shall be made upon one sample of tube selected by the Inspector from each lot of 200 tubes. The tension test specimen of tube shall preferably be a full section, the ends of which shall be plugged with metal plugs which shall not extend within the gage marks. If it is not possible to make the test in this manner, a milled specimen of the tube may be tested in lieu of the full section.

2. The elongation of the specimen shall be determined as the permanent increase in length due to the breaking of specimen in tension, measured between gage marks originally placed upon the specimen ten inches apart. The fracture shall be between the gage marks, and not closer than one inch to either gage mark.

(b) Strain Test

A six-inch test specimen selected from each lot of 200 bronze tubes shall stand an immersion in mercurous nitrate solution containing 100 gms. mercurous nitrate and 13 cc. of nitric acid (1.42 Sp. Gr.) per liter, for 15 minutes, without fracture.

(c) Tube Test

One sample of tube from each lot of 200 tubes shall be flattened to the extent that a micrometer caliper set at 3 times the wall thickness can be passed over the tube freely throughout the flattened area except at the points where the change in element of flattening takes place.

Test shall be made without annealing.

(d) Tensile and Elongation Tests - Bars

Tensile and elongation tests shall be made upon one sample of bar selected by the Inspector from each lot of 200 bars. The strength and elongation shall be not less than that called for in Section 107 (b).

H. T. Cover
Chief of Motive Power

J. L. Gressitt
Chief Engineer

ISSUED
Dec. 30, 1950

MTA Maryland

MARYLAND TRANSIT ADMINISTRATION

MARYLAND DEPARTMENT OF TRANSPORTATION

Martin O'Malley, Governor • Anthony G. Brown, Lt. Governor
Beverley K. Swaim-Staley, Secretary • Ralign T. Wells, Administrator

TO: All Planholders

FROM: Maryland Transit Administration

SUBJECT: **ADDENDUM NO. 3 (REISSUED)**
Contract No.: T-0208-0140
MARC Wedge Storage Yard at Union Station

DATE: August 16, 2011

Enclosed and effective this date is Addendum No. 3 (REISSUED) to the subject Contract. This change makes a correction to the delayed Bid Opening Date from August 25, 2011 to **Friday, September 16, 2011 at 2:00 p.m., 6 St. Paul Street, Baltimore, MD 21202, Conference Room #742.**

A conformed copy of the revised specification sections is attached. A list of the changes made to this contract is also attached to this Addendum. Addendum No. 4 will be issued in approximately two (2) weeks and will include revised specifications and/or drawings and respond to contractor's questions.

The Bidder shall acknowledge receipt of this Addendum by completing and returning this form with the bid package. All other terms and conditions remain unchanged.

NOTE: The Maryland Transit Administration will not accept any more questions in response to this solicitation after the Close of Business (COB) today.

Sincerely,

Vanessa Ashe

Vanessa Ashe, Procurement Officer
Professional Services/Construction/Installation Section
Procurement Division

Acknowledgement of receipt of ADDENDUM #3 (REISSUED) to Solicitation #T-0208-0140

Vendor Name: _____

_____ _____

Authorized Representative's Signature Date

ADDENDUM NO.:	3 (REISSUED)
DATE:	08/16/11
CONTRACT NO.:	T-0208-0140

The following additions, deletions, and modifications are hereby made a part of the Contract Documents of MARC Wedge Storage Yard at Union Station, Contract No.: T-0208-0140.

Item No.	Page	Modification
I. CONTRACT SPECIFICATIONS		
1	NTC Pages 1 thru 7	**Notice to Contractors** – replace in its entirety **Section 4, "Bid Due Date & Time"** – revised bid opening date (incorrect bid opening date – should read "September 16, 2011)
2	Bid Form Page BF 1	**Bid Form** - Revised the "Bid Opening Date" at top of page BF 1 (incorrect bid opening date – should read "September 16, 2011)
3	Appendix C, Federal Minimum Wage Rates	**Wage Rates** - Replace wage rates in its entirety. Incorrect wage rates were included in the specifications. Included "Exhibit C" at top of page.

STATE OF MARYLAND DEPARTMENT OF TRANSPORTATION
MARYLAND TRANSIT ADMINISTRATION
NOTICE TO CONTRACTORS

MARC WEDGE STORAGE YARD AT
UNION STATION
CONTRACT NO.: T-0208-0140 DATE: June 15, 2011

1. DESCRIPTION OF WORK

This contract is for the construction of a MARC Layover Facility in the Washington, DC area near Ivy City. The proposed yard will be a 3 track stub-end configuration with the capacity for three additional tracks for future expansion, and will function as a mid-day layover facility for MARC electric and diesel hauled trains.

The estimated value for this work is in the range of $18,000,001 to $24,000,000.

2. PRE-BID MEETING & SITE VISIT

A Pre-Bid meeting for the purpose of explaining the Project will be held on **July 13, 2011 at 10:00 a.m.**, local time at the Administration Headquarters, 6 St. Paul Street, 7th Floor Conference Rooms 731-732, Baltimore, Maryland 21202-1614.

A Site Visit will be held immediately following the Pre-Bid Meeting. **Anyone attending the site visit must come equipped with an orange safety vest and a hard hat.**

It is strongly suggested that the person(s) responsible for the preparation of bid documents for bidders attend the Pre-Bid Meeting and the site visit. INSTRUCTIONS CRITICAL TO THE PREPARATION OF THE CONTRACT DOCUMENTS WILL BE PRESENTED AT THE PRE-BID MEETING.

3. DEADLINE FOR QUESTIONS

Questions regarding the work should be directed in writing to Vanessa Ashe at the Administration Offices or via Internet address vashe@mta.maryland.gov. Facsimile messages will not be accepted unless accompanied by telephone notification at (410) 767-3353. Our fax number is (410) 333-4810. Questions directed to this office must be received no later than **July 27, 2011** at the close of the business day. Questions should be submitted on company letterhead. No interpretations other than written shall be binding on the Administration.

4. BID DUE DATE & TIME

Sealed Bids addressed to the Maryland Transit Administration, Procurement Division, 6 St. Paul Street, Baltimore, Maryland 21202-1614, and marked **"Bid for Contract No. T-0208-0140, MARC Wedge Storage Yard At Union Station"**, will be received at the above address until but not after 2:00 P.M. local time, **September 16, 2011**. At that time, the Bids will be publicly opened and read aloud in Conference Room #742 at the same address. Hand delivered bids should be deposited in the Bid Box located on the 7th Floor before the 2:00 P.M. deadline. Any bids received after the date and time specified shall not be considered.

5. ELECTRONIC VERSION OF BID DOCUMENTS

The bid documents will be available by electronic means. The Bidder acknowledges and accepts full responsibility to ensure that the Bidder has made no changes to the Administration's bid documents. In the event of a conflict between the versions of the bid documents in the bidder's possession and the version maintained by the Procurement Officer, the version maintained by the Procurement Officer shall govern.

6. AVAILABILITY OF DOCUMENTS

Specifications may be downloaded from the MTA web site. Bidders will be required to register the first time specifications are downloaded and a login number will be assigned. This number should be used every time the bidder downloads the documents for this contract. Bidders must supply accurate information in order to receive notice of all subsequent addenda.

TO OBTAIN THE SPECIFICATIONS:
Visit MTA's website at (www.mta.maryland.gov) , follow the links for "Doing Business with the MTA" – "To view Procurements" - "Professional & Construction/Installation Section", and download the Specifications for this procurement.

TO OBTAIN THE DRAWINGS:
E-mail Vanessa Ashe at vashe@mta.maryland.gov requesting the contract drawings and supplying the following information: the contact person, company name, mailing address, phone # and e-mail address. The drawings (CD) will be mailed to you at no cost. You also have the option of picking up the CD containing the drawings at: 6 Saint Paul Street, Baltimore, MD 21202, Wm Donald Schaefer Bldg., 7th floor.

7. ADDENDA

Bidders are required to acknowledge all addenda with their bid package. Although the MTA endeavors to send out all addenda to this solicitation in a timely manner, it is the responsibility of the contractors to make sure they received all appropriate documents prior to the bid due date.

8. EMARYLAND MARKETPLACE REGULATIONS

"e-Maryland Marketplace" is an electronic commerce system administered by the Maryland Department of General Services.

This means that all such information is immediately available to subscribers to e-Maryland Marketplace. Because of the instant access afforded by e-Maryland Marketplace, it is recommended that all Bidders interested in doing business with Maryland State agencies subscribe to e-Maryland Marketplace at www.eMarylandMarketplace.com.

9. BID BOND

Each bid exceeding $100,000 must be accompanied by a Bid Bond in the amount of five percent (5%) of the Bid Price. Bid, payment, and performance security may be in the form of: (1) a bond executed by a surety company authorized to do business in the State; (2) a bond executed by an individual surety that meets certain criteria; (3) cash; (4) another form of security required by State or federal law; or (5) another form of security satisfactory to the unit awarding the contract. Sections 13-207, 13-216, 17-104 of the State Finance and Procurement Article, Annotated Code of Maryland.

10. PAYMENT AND PERFORMANCE BONDS

Payment and Performance Bonds in the amount of the Contract Price will be required by the awardees. Upon receiving notification of contract award, the Contractors shall deliver their bond to the MTA no later than the time the Contractors execute the contract. Bid, payment, and performance security may be in the form of: (1) a bond executed by a surety company authorized to do business in the State; (2) a bond executed by an individual surety that meets certain criteria; (3) cash; (4) another form of security required by State or federal law; or (5) another form of security satisfactory to the unit awarding the contract. Sections 13-207, 13-216, 17-104 of the State Finance and Procurement Article, Annotated Code of Maryland.

11. ELECTRONIC FUNDS TRANSFER

On every solicitation for a contract expected to exceed $200,000, bidders will be required to accept payments by electronic funds transfer (EFT) unless the State Comptroller's Office grants an exemption.

12. DISADVANTAGED BUSINESS ENTERPRISE PROGRAM

A. DISADVANTAGED BUSINESS ENTERPRISES ARE ENCOURAGED TO RESPOND TO THIS SOLICITATION NOTICE.

B. The Maryland Transit Administration hereby notifies all bidders that, in regard to any Contract entered into pursuant to this advertisement, Disadvantaged Business Enterprises will be afforded full opportunity to submit Bids in response to this Notice, and will not be subjected to discrimination on the basis of political or religious opinion or affiliation, race color, creed, sex, age or national origin in consideration for an award.

C. It is the goal of the Administration that Disadvantaged Business Enterprises participate in all Contracts. Each Contract will contain goals for Disadvantaged Business Enterprise participation on a contract-to-contract basis. A subcontracting goal of **18 percent (18 %)** has been established for this procurement. All bidders must submit with their bid a fully executed copy of the Certified DBE Utilization and Fair Solicitation Affidavit (MDOT DBE FORM A) and DBE Participation Schedule (MDOT DBE FORM B). If the bidder fails to submit these completed forms with the bid as required, the procurement officer shall deem the bid non-responsive or shall determine that the offer is not reasonably susceptible of being selected for award. ALL DBE FIRMS MUST BE CERTIFIED BY THE MARYLAND DEPARTMENT OF TRANSPORTATION. NO OTHER CERTIFICATIONS WILL BE ACCEPTED.

D. **A contractor may count toward its DBE goal 60 percent of its expenditures for materials and supplies required under the contract and obtained from a DBE regular dealer, and 100 percent of such expenditures to a DBE manufacturer. The DBE credited supplies may not exceed 60 percent of the entire contract goal.**

E. New versions of Sections 13-103, 13-104 and 14-303 of the State Finance and Procurement Article of the Maryland Code, relating to increased bid/proposal documentation of DBE commitments, are effective as of October 1, 2004. The Contract under this solicitation will be awarded in accordance with these new requirements. As a result, new bid submission requirements, including certain revised DBE documents, are in effect for this solicitation. These new requirements are set forth elsewhere in this solicitation.

F. As a result of the revisions to Sections 13-103, 13-104 and 14-303, certain existing portions of the Code of Maryland Regulations (COMAR) relating to post bid/proposal submission of DBE subcontractors are inconsistent with the revised statute. To the extent the provisions of COMAR relating to post bid identification of DBE subcontractors are inconsistent with the requirements of this solicitation, the requirements of this solicitation shall control the award of a Contract. Questions or concerns regarding the DBE requirements of this solicitation must be raised prior to the opening of bids or receipt of initial proposals

G. Effective on October 1, 2009, Minority Business Enterprise (MBE) firms may elect to be dually certification as woman-owned businesses and as members of an ethnic or racial category. For purposes of achieving any gender or ethnic/racial MBE participation subgoals in a particular contract, an MBE firm that has dual certification may participate in the contract either as a woman-owned business or as a business owned by a member of a racial or ethnic minority group, **but not both**.

WARNING – PLEASE READ:

- **A firm must be listed in the MDOT MBE/DBE Directory with the gender category in order to be used to meet the gender subgoal.**
- **A firm must be listed in the MDOT MBE/DBE Directory with an ethnic/racial category in order to be used to meet the ethnic/racial subgoal.**
- **A firm must be listed in the MDOT MBE/DBE Directory with both the gender and ethnic/racial categories in order for a contractor to have the option of selecting which of those categories it will use for the firm on a State contract.**
- **Contractors should designate whether the MBE firm will be used as a woman-owned business or as a business owned by a member of a racial/ethnic group before calculating the percentage of MBE participation goals and subgoals they intend to meet.**

Maryland's MBE/DBE Directory will reflect the dual certification status beginning October 1, 2009. You can access the MBE/DBE Directory at http://mbe.mdot.state.md.us. Firms with dual certification will now be listed as follows:

Example:
ABC Corporation, Inc.
123 Corporate Circle
Hanover, MD 21076
Female/African American
00-000

13. AFFIRMATIVE ACTION REQUIREMENTS

Bidders on this Work will be required to comply with MTA Affirmative Action Requirements and all applicable Equal Employment Opportunity Laws and Regulations.

14. FEDERAL FUNDING

Any contract resulting from bids submitted is subject to a Financial Assistance Contract between the Administration and the U.S. Department of Transportation. Federal funds will be used to finance **80%** of the cost of this contract.

15. SUSPENSION AND DEBARMENT CERTIFICATION

All bidders will be required to certify that they are not on the GSA List of Parties Excluded from Procurement and the List of Contractors Suspended or Debarred from Contracting with the State of Maryland. All bidders must also be in good standing with the State Assessment & Taxation Department.

16. CONTRACTOR'S QUESTIONNAIRE

All Bidders shall submit a fully executed copy the Contractor's Questionnaire Pre-Award Evaluation Data Form with the bid package.

17. INSURANCE REQUIREMENTS

The Administration has chosen to provide Workers' Compensation, General Liability, Excess Liability, Builders Risk, Pollution Liability and Railroad Protective coverage on behalf of Contractors and subcontractors working on this project. This approach to project insurance is commonly called a wrap-up or owner controlled insurance program (OCIP). Specific information regarding Liability Insurance Requirements is contained in the Contract Specifications.

Please note that an Insurance Cost Worksheet must be included with each bid package.

18. USE OF BIDDER'S OWN FORCES

The bidder with his own forces shall perform not less than **fifty percent (50 %)** of the work at the project site.

19. BUY AMERICA REQUIREMENTS

This contract is subject to Section 165, "Buy America", of the Surface Transportation Assistant Act of 1982, U.S. Public Law 197-424, and regulations and/or guidance implementing this statutory provision issued by the Federal Transit Administration of the U.S. Department of Transportation. The contract is further subject to the Buy American Steel requirements of Chapter 02 of subtitle 11 of the Code of Maryland Regulations, Title 21, State Procurement Regulations.

20. CANCELLATION OR REJECTION OF BIDS

Notice to Contractors may be canceled in accordance with State Procurement Regulations.

The Administration reserves the right to reject any and all bids and/or waive technical defects if, in its judgment, the interests of the Administration so require.

STATE OF MARYLAND DEPARTMENT OF TRANSPORTATION
MARYLAND TRANSIT ADMINISTRATION
BID FORM
FOR
CONTRACT NO.: T-0208-0140

TO: MARYLAND TRANSIT ADMINISTRATION
ATTN: PROCUREMENT DIVISION
6 SAINT PAUL STREET, 7TH FLOOR
BALTIMORE, MD 21202-1614

BID OPENING DATE:
September 16, 2011
BID OPENING TIME:
2:00 PM

BID OF: _____
(Bidder's Name)

PROJECT DESCRIPTION:
This contract is for the construction of a MARC Layover Facility in the Washington, CD area near Ivy City. The proposed yard will be a 3 track stub-end configuration with the capacity for three additional tracks for future expansion, and will function as a mid-day layover facility for MARC electric and diesel hauled trains.

1. This bid is hereby submitted to the Maryland Transit Administration (hereinafter sometimes called the "Administration") in response to NOTICE TO CONTRACTORS dated _____ .

2. The UNDERSIGNED has thoroughly examined, acknowledges receipt of, and is familiar with the Contract Documents as well as the various instructions, information, and requirements covering the same, all as mentioned herein and in said NOTICE TO CONTRACTORS.

3. In compliance with said NOTICE TO CONTRACTORS the UNDERSIGNED hereby proposes to furnish all labor, equipment, and materials and perform all work described and in strict accordance with the provisions of the Contract Documents for the consideration of the amounts, lump sum and unit prices listed in the attached Unit Price Schedule, and agrees that, upon Notice of Award, within one hundred fifty (150) calendar days after the date of opening of bids, unless mutually extended, he will within ten (10) calendar days after receipt of the prescribed forms, execute the Contract and furnish a performance bond and payment bond (if such bonds are required by the Contract Documents) on forms furnished by the Administration with good and sufficient surety or sureties.

4. The UNDERSIGNED agrees and understands that the time of completion is as specified in the Special Provisions, unless the completion dates are extended as provided for in the Contract Documents.

5. The UNDERSIGNED agrees to pay liquidated damages in the amount specified in the Special Provisions for each and every calendar day after the completion date that the work remains incomplete unless an extension is granted as provided for in the Contract Documents.

APPENDIX C

FEDERAL MINIMUM WAGE REQUIREMENT

T-0208-0140
MARC WEDGE STORAGE YARD
AT UNION STATION

FEDERAL WAGE RATES

This Appendix contains the minimum wage rates to be paid for workers employed under this Contract on the jobsites in accordance with the supplementary General Provisions and the Wage Rate Decisions as defined below.

1. Wage rates - Decision No. DC100001 shall be used for all work at the District of Columbia sites as described in the Contract documents.

APPENDIX C

General Decision Number: DC100001 07/22/2011 DC1

Superseded General Decision Number: DC20080001

State: District of Columbia

Construction Types: Heavy (Heavy and Sewer and Water Line) and Highway

County: District of Columbia Statewide.

HEAVY CONSTRUCTION PROJECTS (Including Sewer and Water Lines); HIGHWAY CONSTRUCTION PROJECTS

Modification Number	Publication Date
0	03/12/2010
1	03/19/2010
2	04/23/2010
3	05/07/2010
4	06/11/2010
5	07/09/2010
6	07/23/2010
7	08/20/2010
8	09/24/2010
9	11/05/2010
10	12/10/2010
11	12/24/2010
12	01/07/2011
13	01/21/2011
14	04/15/2011
15	05/06/2011
16	06/03/2011
17	06/10/2011
18	07/01/2011
19	07/08/2011
20	07/22/2011

ASBE0024-001 10/01/2009

	Rates	Fringes
Asbestos Worker/Heat and Frost Insulator Includes the application of all insulating materials, protective coverings, coatings and finishes to all types of mechanical systems	$ 30.43	14.43

ASBE0024-002 10/01/2009

	Rates	Fringes
HAZARDOUS MATERIAL HANDLER Includes preparation, wetting, stripping, removal, scrapping,		

vacuuming, bagging and
disposing of all
insulation materials,
whether they contain
asbestos or not, from
mechanical systems.....$ 18.85 7.10

ASBE0024-005 10/01/2009

	Rates	Fringes
Fire Stop Technician.....	$ 24.10	6.94

Includes the application of materials or devices within or around penetrations and openings in all rated wall or floor assemblies, in order to prevent the pasage of fire, smoke of other gases. The application includes all components involved in creating the rated barrier at perimeter slab edges and exterior cavities, the head of gypsum board or concrete walls, joints between rated wall or floor components, sealing of penetrating items and blank openings.

BOIL0193-001 10/01/2009

	Rates	Fringes
Boilermakers:.....	$ 37.66	16.36

BRDC0001-001 05/03/2010

	Rates	Fringes
Bricklayer.....	$ 27.21	7.21

BRMD0001-004 04/25/2010

	Rates	Fringes
BRICKLAYER		
Refractory (Firebrick).....	$ 33.55	7.72

CARP0132-001 05/01/2010

	Rates	Fringes
Carpenter/Lather.....	$ 26.38	7.00
Piledriver.....	$ 24.48	7.80

CARP1831-001 04/01/2010

	Rates	Fringes
Carpenters:		
Millwrights.....	$ 27.91	10.90

CARP2311-002 05/01/2009

	Rates	Fringes
DIVER TENDER.....	$ 24.48	7.80

APPENDIX C

DIVER.....$ 36.13 7.80

---

* ELEC0026-001 06/01/2011

	Rates	Fringes
Electricians	$ 39.75	3%+13.10

ELEC0026-008 07/01/2003

	Rates	Fringes
Motor Repairmen		
Removal and reinstallation of electrical motors	$ 23.69	7.73+3%+a

a. PAID HOLIDAYS:
New Year's Day, Martin Luther King Jr.'s Birthday, Inauguration Day, Memorial Day, Fourth of July,Labor Day, Veterans Day,Thanksgiving Day, the day after Thanksgiving and Christmas Day or days designated as legal holidays by the Federal Government.

ELEC0070-001 05/04/2009

	Rates	Fringes
Line Construction:		
Cable Splicers	$ 30.06	18.75%+4.75
Equipment Mechanic	$ 21.82	19.75%+4.81
Equipment Operators	$ 30.06	18.75%+4.75
Groundman/Truck Driver	$ 15.34	19.75%+4.81
Line Truck with Auger	$ 20.09	19.75%+4.81
Linemen	$ 30.06	18.75%+4.75

ENGI0077-001 05/01/2011

	Rates	Fringes
Power equipment operators: (HEAVY AND HIGHWAY CONSTRUCTION)		
GROUP 1	$ 32.36	8.00+a+b
GROUP 2	$ 31.35	8.00+a+b
GROUP 3	$ 30.89	8.00+a
GROUP 4	$ 30.17	8.00+a
GROUP 5	$ 28.12	8.00+a
GROUP 6	$ 23.53	8.00+a
GROUP 7	$ 32.73	8.00+a

POWER EQUIPMENT OPERATORS CLASSIFICATIONS

GROUP 1: Tower Cranes and Cranes 100 ton and over.

GROUP 2: 35 ton cranes & above, tower & climbing cranes, derricks, concrete boom pump, drill rigs (equivalent to L & Double L), mole.

GROUP 3: Backhoes, cableways, cranes, cherry pickers, elevating graders, hoists, paving mixers, power

shovels,tunnel shovels. batch plants, shields, tunnel mining machines, gradalls, front end loaders, 3 1/2 cu. yds. and above, power driven wheel scoops and scrapers (50 cu. yds. struck capacity or above), rail tamper, draglines, boomcat, mucking machines, graders in tunnels, pile driving engines.

GROUP 4: Front end loaders below 3 1/2 cu. yds, boom trucks, hydraulic backhoes 1/2 yds. capacity or below rubber or track mounted, tug boats, power driven wheel scoops & scrapers, blade graders, motor graders, bulldozers, trenching machines, concrete mixer, speed swing pettibone, ballast regulator, concrete pump, mechanic, welder, mechanic welder, shotcrete machines, Hoeram, locomotive (standard, narrow gauge), tuggers.

GROUP 5: High lifts above 10 feet, boilers (skelton), asphalt spreaders, bullfloat finishing machines, concrete finishing machines, concrete spreaders, fine graders, air compressors, welding machines, pumps, generators, well points, deep wells, hydraulic pumps, elevators, freeze uniits, tunnel motorman or dinky operator, roller, conveyors, well drilling machines, grout pump, fireman.

GROUP 6: Fork lifts, ditch witch, bobcat 1/3 cu. yd. and below, space heaters, sweepers, assistant engineers, oilers.

GROUP 7: Master mechanic.

a. PAID HOLIDAYS: New Years Day, Inaugural Day, Decoration Day, Independence Day, Labor Day, Martin Luther King's Birthday, Veterans' Day, Thanksgiving Day, Friday after Thanksgiving and Christmas Day.

b. PREMIUM PAY:
Tower crane and cranes 100-ton and over to receive $1.00 per hour premium over Group One.

ENGI0077-002 06/01/2011

	Rates	Fringes
Power equipment operators: (PAVING AND INCIDENTAL GRADING)		
GROUP 1	$ 26.09	6.60
GROUP 2	$ 23.25	6.60
GROUP 3	$ 19.99	6.60
GROUP 4	$ 18.00	6.60
GROUP 5	$ 26.75	6.40

POWER EQUIPMENT OPERATORS CLASSIFICATIONS

GROUP 1: Gradall operator, Crane.
GROUP 2: Boom Truck, Milling Machine, Excavator, Rubber Tire Backhoe, Asphalt Paver, Asphalt Plant Engineer, Motor Grader, Track Loader, Rubber Tire Loader, Track Dozer, Concrete Paver.
GROUP 3: Broom Truck, Asphalt Roller.
GROUP 4: Air Compressor, Grade Rollers.
GROUP 5: Mechanic.

APPENDIX C

ENGI0077-003 07/01/2011

	Rates	Fringes
Power equipment operators: (SEWER, GAS AND WATER LINE CONSTRUCTION)		
GROUP 1	$ 23.23	6.72+a
GROUP 2	$ 22.83	6.72+a
GROUP 3	$ 22.32	6.72+a
GROUP 4	$ 22.00	6.72+a
GROUP 5	$ 21.18	6.72+a

POWER EQUIPMENT OPERATORS CLASSIFICATIONS

GROUP 1: Excavators, Cranes, Gradalls.

GROUP 2: Backhoes, Front-end Loaders, Fork alift/Lull, Bulldozers, Motor Graders. Qualified Mechanics, Hydraulic Tamper and Hoe Pack, Paving Mixers, Pile Driving Engines, Batch Plant, Concrete Pumps, Low-Boy Driver, Lube Truck.

GROUP 3: Trenching Machine, Well Drilling Machines, Concrete Mixers, Motor Graders, Truck Driver.

GROUP 4. Roller, Air Compressors, Pumps, Welding Machines, Well Points, Firemen.

GROUP 5: Oiler

a.PAID HOLIDAYS: New Year's Day, Inaugural Day, Washington's Birthday, Decoration Day, Independence Day, Labor Day, Veterans Day, Thanksgiving Day, Christmas Day and Martin Luther King's Birthday.

IRON0005-001 06/01/2009

	Rates	Fringes
Ironworkers: Structural, Ornamental and Chain Link Fence	$ 28.83	13.295

IRON0201-001 05/01/2009

	Rates	Fringes
Ironworkers: Reinforcing	$ 25.20	14.33

LABO0657-003 06/01/2010

	Rates	Fringes
Laborers: (HEAVY AND HIGHWAY AND SEWER & WATER LINES CONSTRUCTION)		
GROUP 1	$ 21.64	5.97
GROUP 2	$ 21.98	5.97

GROUP 3	$ 22.16	5.97
GROUP 4	$ 22.33	5.97
GROUP 5	$ 22.80	5.97
GROUP 6	$ 23.39	5.97
GROUP 7	$ 23.96	5.97
GROUP 8	$ 24.73	5.97

LABORERS CLASSIFICATIONS:

GROUP 1: Carloaders, choker setter, concrete crewman, crushed feeder, demolition laborers, including salvaging all material, loading, cleaning up, wrecking, dumpmen, flagmen, fence erector and installer (other than chain link), including installation and erection of fence, guard rails, medial rails, reference posts, guide posts and right-of-way markers, form strippers, general laborers, railroad track laborers, riprap man, scale man, stake jumper, structure mover, includes foundation, separation, preparation, cribbing, shoring, jacking and unloading of structures, water nozzleman, timber bucker and faller, truck loader, water boys, tool room men.

GROUP 2: Combined air and water nozzleman, cement handler, dope pot fireman (nonmechanical), form cleaning machine, mechanical railroad equipment (includes spiker, puller, tile cleaner, tamper, pipe wrapper, power driven wheelbarrows, operators of hand derricks, towmasters, scootcretes, buggymobiles and similar equipment), tamper or rammer operator, trestle scaffold builders over one tier high, power tool operator (gas, electric or pneumatic), sandblast or gunnite tailhose man, scaffold erector, (steel or wood), vibrator operator (up to 4 feet), asphalt cutter, mortar men, shorer and lagger, creosote material handler, corrosive enamel or equl, paver breaker and jackhammer operators.

GROUP 3: Multi-section pipe layer, non-metallic clay and concrete pipe layer (including caulker, collarman, jointer, rigger and jacker, thermal welder and corrugated metal culvert pipe layer.

GROUP 4: Asphalt block pneumatic cutter, asphalt roller, walker, chainsaw operator with attachment, concrete saw (walking), high scalers, jackhammer operator (using over 6 feet of steel), vibrator operator (4 feet and over), well point installer, air trac operator.

GROUP 5: Asphalt screeder, big drills, cut of the hole drills (1 1/2 " piston or larger), down the hole drills (3 1/2" piston or larger) gunnite or sandblaster nozzleman, asphalt raker, asphalt tamper, form setter, demolition torch operator, shotcrete nozzlemen and potman.

GROUP 6: Powderman, master form setters.

GROUP 7: Brick paver (asphalt block paver, asphalt block sawman, asphalt block grinder, hastings block or similar type)

GROUP 8: Licensed powdermen.

LABO0657-004 06/01/2010

	Rates	Fringes

APPENDIX C

Laborers: (HAZARDOUS WASTE
REMOVAL, EXCEPT ON MECHANICAL
SYSTEMS:
Preparation for, removing and
encapsulation of hazardous
materials from non-mechanical
systems)

Skilled Asbestos Abatement Laborers	$ 17.82	5.97
Skilled Toxic and Hazardous Waste Removal Laborers	$ 20.97	5.97

LABO0657-005 06/01/2010

	Rates	Fringes
Laborers: (TUNNEL, RAISE & SHAFT (FREE AIR) FOR HEAVY AND SEWER & WATER LINES CONSTRUCTION)		
GROUP 1	$ 22.41	5.97
GROUP 2	$ 23.10	5.97
GROUP 3	$ 24.85	5.97
GROUP 4	$ 25.60	5.97

LABORERS CLASSIFICATIONS:

GROUP 1: Brakeman, Bull Gang, Dumper, Trackmen, Concrete Man.

GROUP 2: Chuck Tender, Powdermen in Prime House, Form Setters and Movers, Nippers, Cableman, Houseman, Groutman, Bell or Signalman, Top or Bottom Vibrator Operator.

GROUP 3: Miners, Re-Bar Underground, Concrete or Gunnite Nozzlemen, Powdermen, Timbermen and Re-Timbermen, Wood Steel Including Liner plate or Other Support, Material Motorman, Caulkers, Diamond Drill Operators, Riggers, Cement Finishers-Underground, Welders and Burners, Shield Driver, Air Trac Operator, Shotcrete Nozzlemen and Potman.

GROUP 4: Mucking Machine Operator (Air).

LABO0657-006 06/01/2010

	Rates	Fringes
Laborers: (TUNNEL, RAISE AND SHAFT (COMPRESSED AIR) FOR HEAVY CONSTRUCTION ONLY		

Gauge Pressure (Pounds)	Work Period (Hours)		
1-14	7	$ 28.85	5.97
14-18	6	$ 33.95	5.97

FOOTNOTE: On any requirement for air pressure in excess of 18 PSI, work periods and rates should be negotiated at a pre-bid conference.

APPENDIX C

LABO0657-007 06/01/2010

	Rates	Fringes
Laborers: (PAVING AND INCIDENTAL GRADING)		
Asphalt Raker & Concrete Saw Operator	$ 18.42	4.90
Asphalt Shoveler	$ 17.84	4.90
Asphalt Tammer & Concrete Shoveler	$ 18.09	4.90
Jack Hammer	$ 18.51	4.90
Laborer	$ 17.70	4.90
Sand Setter & Form Setter	$ 19.10	4.90

LABO0657-008 06/01/2010

	Rates	Fringes
LABORERS (BRICK MASONRY WORK)		
Mason Tenders	$ 15.32	5.97
Scaffold Builders, Mortarmen	$ 16.20	5.97

MARB0002-003 05/01/2011

	Rates	Fringes
Marble & Stone Mason Includes Pointing, Caulking and Cleaning of All Types of Masonry, Brick, Stone and Cement Structures	$ 32.88	13.99

MARB0003-001 05/01/2010

	Rates	Fringes
Mosaic & Terrazzo Worker, Tile Layer		
Marble Mason and Tile Layer	$ 25.29	9.59
Terrazzo Worker	$ 26.04	9.59

MARB0003-004 05/01/2010

	Rates	Fringes
Marble, Tile & Terrazzo Finisher	$ 20.48	8.44

PAIN0051-001 06/01/2010

	Rates	Fringes
Painters:		
All Industrial Work	$ 27.68	7.86
Bridges, Heavy Highway, Lead Abatement and Flame/Thermal Spray	$ 31.32	7.86

APPENDIX C

Commercial and Mold Remediation, Painters, Wallcovers and Drywall Finishers	$ 24.64	7.86
Metal Polishing and Refinishing	$ 25.64	7.86

PLAS0891-001 05/01/2010

	Rates	Fringes
Cement Masons:		
HEAVY CONSTRUCTION ONLY	$ 27.15	9.58

PLAS0891-002 06/01/2007

	Rates	Fringes
Cement Masons: (PAVING & INCIDENTAL GRADING)		
Cement Masons	$ 17.35	4.35
Concrete Saw Operators	$ 17.35	4.35
Form Setters	$ 17.35	4.35

PLUM0005-001 08/01/2010

	Rates	Fringes
Plumbers	$ 37.67	14.69+a

a. PAID HOLIDAYS: Labor Day, Veterans' Day, Thanksgiving Day and the day after Thanksgiving, Christmas Day, New Year's Day, Martin Luther King's Birthday, Memorial Day and the Fourth of July.

PLUM0602-005 11/01/2010

	Rates	Fringes
Steamfitter, Refrigeration & Air Conditioning Mechanic	$ 36.87	16.72+a

a. PAID HOLIDAYS: New Year's Day, Martin Luther King's Birthday, Memorial Day, Independence Day, Labor Day, Veterans Day, Thanksgiving Day and the day after Thanksgiving and Christmas Day.

SHEE0100-001 07/01/2011

	Rates	Fringes
Sheet Metal Worker	$ 37.09	13.61

TEAM0639-001 06/01/2010

	Rates	Fringes
Truck drivers: (HEAVY & HIGHWAY CONSTRUCTION)		
Tractor trailer, Low Boy	$ 20.50	2.00+a

APPENDIX C

Truck Drivers.....$ 18.50 2.00+a

a. VACATION: Employees will receive one (1) week's paid vacation after one (1) year of service.

TEAM0639-005 06/01/2009

	Rates	Fringes
Truck drivers: (PAVING & INCIDENTAL GRADING) All paving projects where the grading is incidental to the paving	$ 18.00	4.00

WELDERS - Receive rate prescribed for craft performing operation to which welding is incidental.

Unlisted classifications needed for work not included within the scope of the classifications listed may be added after award only as provided in the labor standards contract clauses (29CFR 5.5 (a) (1) (ii)).

In the listing above, the "SU" designation means that rates listed under the identifier do not reflect collectively bargained wage and fringe benefit rates. Other designations indicate unions whose rates have been determined to be prevailing.

WAGE DETERMINATION APPEALS PROCESS

1.) Has there been an initial decision in the matter? This can be:

* an existing published wage determination
* a survey underlying a wage determination
* a Wage and Hour Division letter setting forth a position on a wage determination matter
* a conformance (additional classification and rate) ruling

On survey related matters, initial contact, including requests for summaries of surveys, should be with the Wage and Hour Regional Office for the area in which the survey was conducted because those Regional Offices have responsibility for the Davis-Bacon survey program. If the response from this initial contact is not satisfactory, then the process described in 2.) and 3.) should be followed.

With regard to any other matter not yet ripe for the formal process described here, initial contact should be with the Branch of Construction Wage Determinations. Write to:

Branch of Construction Wage Determinations
Wage and Hour Division

APPENDIX C

U.S. Department of Labor
200 Constitution Avenue, N.W.
Washington, DC 20210

2.) If the answer to the question in 1.) is yes, then an interested party (those affected by the action) can request review and reconsideration from the Wage and Hour Administrator (See 29 CFR Part 1.8 and 29 CFR Part 7). Write to:

Wage and Hour Administrator
U.S. Department of Labor
200 Constitution Avenue, N.W.
Washington, DC 20210

The request should be accompanied by a full statement of the interested party's position and by any information (wage payment data, project description, area practice material, etc.) that the requestor considers relevant to the issue.

3.) If the decision of the Administrator is not favorable, an interested party may appeal directly to the Administrative Review Board (formerly the Wage Appeals Board). Write to:

Administrative Review Board
U.S. Department of Labor
200 Constitution Avenue, N.W.
Washington, DC 20210

4.) All decisions by the Administrative Review Board are final.

==========

END OF GENERAL DECISION

MTA Maryland

MARYLAND TRANSIT ADMINISTRATION

MARYLAND DEPARTMENT OF TRANSPORTATION

Martin O'Malley, Governor • Anthony G. Brown, Lt. Governor
Beverley K. Swaim-Staley, Secretary • Ralign T. Wells, Administrator

TO: All Planholders

FROM: Maryland Transit Administration

SUBJECT: **ADDENDUM NO. 3**
Contract No.: T-0208-0140
MARC Wedge Storage Yard at Union Station

DATE: August 16, 2011

Enclosed and effective this date is Addendum No. 3 to the subject Contract. This change delays the Bid Opening Date of August 25, 2011 to **Friday, September 9, 2011 at 2:00 p.m., 6 St. Paul Street, Baltimore, MD 21202, Conference Room #742.**

A conformed copy of the revised specification sections is attached. A list of the changes made to this contract is also attached to this Addendum. Addendum No. 4 will be issued in approximately two (2) weeks and will include revised specifications and/or drawings and responds to contractor's questions.

The Bidder shall acknowledge receipt of this Addendum by completing and returning this form with the bid package. All other terms and conditions remain unchanged.

NOTE: The Maryland Transit Administration will not accept any more questions in response to this solicitation after the Close of Business (COB) today.

Sincerely,

Vanessa Ashe

Vanessa Ashe, Procurement Officer
Professional Services/Construction/Installation Section
Procurement Division

Acknowledgement of receipt of ADDENDUM #3 to Solicitation #T-0208-0140

Vendor Name: _____

_____ _____

Authorized Representative's Signature Date

ADDENDUM NO.: 3
DATE: 08/16/11
CONTRACT NO.: T-0208-0140

The following additions, deletions, and modifications are hereby made a part of the Contract Documents of MARC Wedge Storage Yard at Union Station, Contract No.: T-0208-0140.

Item No.	Page	Modification
I. CONTRACT SPECIFICATIONS		
1	NTC Pages 1 thru 7	**Notice to Contractors** – replace in its entirety **Section 4, "Bid Due Date & Time"** – revised bid opening date
2	Bid Form Page BF 1	**Bid Form -** Revised the "Bid Opening Date" at top of page BF 1.
3	Appendix C, Federal Minimum Wage Rates	**Wage Rates -** Replace wage rates in its entirety. Incorrect wage rates were included in the specifications. Included "Exhibit C" at top of page.

STATE OF MARYLAND DEPARTMENT OF TRANSPORTATION
MARYLAND TRANSIT ADMINISTRATION
NOTICE TO CONTRACTORS

MARC WEDGE STORAGE YARD AT UNION STATION
CONTRACT NO.: T-0208-0140 DATE: June 15, 2011

1. DESCRIPTION OF WORK

This contract is for the construction of a MARC Layover Facility in the Washington, DC area near Ivy City. The proposed yard will be a 3 track stub-end configuration with the capacity for three additional tracks for future expansion, and will function as a mid-day layover facility for MARC electric and diesel hauled trains.

The estimated value for this work is in the range of $18,000,001 to $24,000,000.

2. PRE-BID MEETING & SITE VISIT

A Pre-Bid meeting for the purpose of explaining the Project will be held on **July 13, 2011 at 10:00 a.m.**, local time at the Administration Headquarters, 6 St. Paul Street, 7th Floor Conference Rooms 731-732, Baltimore, Maryland 21202-1614.

A Site Visit will be held immediately following the Pre-Bid Meeting. **Anyone attending the site visit must come equipped with an orange safety vest and a hard hat.**

It is strongly suggested that the person(s) responsible for the preparation of bid documents for bidders attend the Pre-Bid Meeting and the site visit. INSTRUCTIONS CRITICAL TO THE PREPARATION OF THE CONTRACT DOCUMENTS WILL BE PRESENTED AT THE PRE-BID MEETING.

3. DEADLINE FOR QUESTIONS

Questions regarding the work should be directed in writing to Vanessa Ashe at the Administration Offices or via Internet address vashe@mta.maryland.gov. Facsimile messages will not be accepted unless accompanied by telephone notification at (410) 767-3353. Our fax number is (410) 333-4810. Questions directed to this office must be received no later than **July 27, 2011** at the close of the business day. Questions should be submitted on company letterhead. No interpretations other than written shall be binding on the Administration.

4. BID DUE DATE & TIME

Sealed Bids addressed to the Maryland Transit Administration, Procurement Division, 6 St. Paul Street, Baltimore, Maryland 21202-1614, and marked **"Bid for Contract No. T-0208-0140, MARC Wedge Storage Yard At Union Station"**, will be received at the above address until but not after 2:00 P.M. local time, **September 9, 2011**. At that time, the Bids will be publicly opened and read aloud in Conference Room #742 at the same address. Hand delivered bids should be deposited in the Bid Box located on the 7th Floor before the 2:00 P.M. deadline. Any bids received after the date and time specified shall not be considered.

5. ELECTRONIC VERSION OF BID DOCUMENTS

The bid documents will be available by electronic means. The Bidder acknowledges and accepts full responsibility to ensure that the Bidder has made no changes to the Administration's bid documents. In the event of a conflict between the versions of the bid documents in the bidder's possession and the version maintained by the Procurement Officer, the version maintained by the Procurement Officer shall govern.

6. AVAILABILITY OF DOCUMENTS

Specifications may be downloaded from the MTA web site. Bidders will be required to register the first time specifications are downloaded and a login number will be assigned. This number should be used every time the bidder downloads the documents for this contract. Bidders must supply accurate information in order to receive notice of all subsequent addenda.

TO OBTAIN THE SPECIFICATIONS:
Visit MTA's website at (www.mta.maryland.gov) , follow the links for "Doing Business with the MTA" – "To view Procurements" - "Professional & Construction/Installation Section", and download the Specifications for this procurement.

TO OBTAIN THE DRAWINGS:
E-mail Vanessa Ashe at vashe@mta.maryland.gov requesting the contract drawings and supplying the following information: the contact person, company name, mailing address, phone # and e-mail address. The drawings (CD) will be mailed to you at no cost. You also have the option of picking up the CD containing the drawings at: 6 Saint Paul Street, Baltimore, MD 21202, Wm Donald Schaefer Bldg., 7th floor.

7. ADDENDA

Bidders are required to acknowledge all addenda with their bid package. Although the MTA endeavors to send out all addenda to this solicitation in a timely manner, it is the responsibility of the contractors to make sure they received all appropriate documents prior to the bid due date.

8. EMARYLAND MARKETPLACE REGULATIONS

"e-Maryland Marketplace" is an electronic commerce system administered by the Maryland Department of General Services.

This means that all such information is immediately available to subscribers to e-Maryland Marketplace. Because of the instant access afforded by e-Maryland Marketplace, it is recommended that all Bidders interested in doing business with Maryland State agencies subscribe to e-Maryland Marketplace at www.eMarylandMarketplace.com.

9. BID BOND

Each bid exceeding $100,000 must be accompanied by a Bid Bond in the amount of five percent (5%) of the Bid Price. Bid, payment, and performance security may be in the form of: (1) a bond executed by a surety company authorized to do business in the State; (2) a bond executed by an individual surety that meets certain criteria; (3) cash; (4) another form of security required by State or federal law; or (5) another form of security satisfactory to the unit awarding the contract. Sections 13-207, 13-216, 17-104 of the State Finance and Procurement Article, Annotated Code of Maryland.

10. PAYMENT AND PERFORMANCE BONDS

Payment and Performance Bonds in the amount of the Contract Price will be required by the awardees. Upon receiving notification of contract award, the Contractors shall deliver their bond to the MTA no later than the time the Contractors execute the contract. Bid, payment, and performance security may be in the form of: (1) a bond executed by a surety company authorized to do business in the State; (2) a bond executed by an individual surety that meets certain criteria; (3) cash; (4) another form of security required by State or federal law; or (5) another form of security satisfactory to the unit awarding the contract. Sections 13-207, 13-216, 17-104 of the State Finance and Procurement Article, Annotated Code of Maryland.

11. ELECTRONIC FUNDS TRANSFER

On every solicitation for a contract expected to exceed $200,000, bidders will be required to accept payments by electronic funds transfer (EFT) unless the State Comptroller's Office grants an exemption.

12. DISADVANTAGED BUSINESS ENTERPRISE PROGRAM

A. DISADVANTAGED BUSINESS ENTERPRISES ARE ENCOURAGED TO RESPOND TO THIS SOLICITATION NOTICE.

B. The Maryland Transit Administration hereby notifies all bidders that, in regard to any Contract entered into pursuant to this advertisement, Disadvantaged Business Enterprises will be afforded full opportunity to submit Bids in response to this Notice, and will not be subjected to discrimination on the basis of political or religious opinion or affiliation, race color, creed, sex, age or national origin in consideration for an award.

C. It is the goal of the Administration that Disadvantaged Business Enterprises participate in all Contracts. Each Contract will contain goals for Disadvantaged Business Enterprise participation on a contract-to-contract basis. A subcontracting goal of **18 percent (18 %)** has been established for this procurement. All bidders must submit with their bid a fully executed copy of the Certified DBE Utilization and Fair Solicitation Affidavit (MDOT DBE FORM A) and DBE Participation Schedule (MDOT DBE FORM B). If the bidder fails to submit these completed forms with the bid as required, the procurement officer shall deem the bid non-responsive or shall determine that the offer is not reasonably susceptible of being selected for award. ALL DBE FIRMS MUST BE CERTIFIED BY THE MARYLAND DEPARTMENT OF TRANSPORTATION. NO OTHER CERTIFICATIONS WILL BE ACCEPTED.

D. **A contractor may count toward its DBE goal 60 percent of its expenditures for materials and supplies required under the contract and obtained from a DBE regular dealer, and 100 percent of such expenditures to a DBE manufacturer. The DBE credited supplies may not exceed 60 percent of the entire contract goal.**

E. New versions of Sections 13-103, 13-104 and 14-303 of the State Finance and Procurement Article of the Maryland Code, relating to increased bid/proposal documentation of DBE commitments, are effective as of October 1, 2004. The Contract under this solicitation will be awarded in accordance with these new requirements. As a result, new bid submission requirements, including certain revised DBE documents, are in effect for this solicitation. These new requirements are set forth elsewhere in this solicitation.

F. As a result of the revisions to Sections 13-103, 13-104 and 14-303, certain existing portions of the Code of Maryland Regulations (COMAR) relating to post bid/proposal submission of DBE subcontractors are inconsistent with the revised statute. To the extent the provisions of COMAR relating to post bid identification of DBE subcontractors are inconsistent with the requirements of this solicitation, the requirements of this solicitation shall control the award of a Contract. Questions or concerns regarding the DBE requirements of this solicitation must be raised prior to the opening of bids or receipt of initial proposals

G. Effective on October 1, 2009, Minority Business Enterprise (MBE) firms may elect to be dually certification as woman-owned businesses and as members of an ethnic or racial category. For purposes of achieving any gender or ethnic/racial MBE participation subgoals in a particular contract, an MBE firm that has dual certification may participate in the contract either as a woman-owned business or as a business owned by a member of a racial or ethnic minority group, **but not both**.

WARNING – PLEASE READ:

- **A firm must be listed in the MDOT MBE/DBE Directory with the gender category in order to be used to meet the gender subgoal.**
- **A firm must be listed in the MDOT MBE/DBE Directory with an ethnic/racial category in order to be used to meet the ethnic/racial subgoal.**
- **A firm must be listed in the MDOT MBE/DBE Directory with both the gender and ethnic/racial categories in order for a contractor to have the option of selecting which of those categories it will use for the firm on a State contract.**
- **Contractors should designate whether the MBE firm will be used as a woman-owned business or as a business owned by a member of a racial/ethnic group before calculating the percentage of MBE participation goals and subgoals they intend to meet.**

Maryland's MBE/DBE Directory will reflect the dual certification status beginning October 1, 2009. You can access the MBE/DBE Directory at http://mbe.mdot.state.md.us. Firms with dual certification will now be listed as follows:

Example:
ABC Corporation, Inc.
123 Corporate Circle
Hanover, MD 21076
Female/African American
00-000

13. AFFIRMATIVE ACTION REQUIREMENTS

Bidders on this Work will be required to comply with MTA Affirmative Action Requirements and all applicable Equal Employment Opportunity Laws and Regulations.

14. FEDERAL FUNDING

Any contract resulting from bids submitted is subject to a Financial Assistance Contract between the Administration and the U.S. Department of Transportation. Federal funds will be used to finance **80%** of the cost of this contract.

15. SUSPENSION AND DEBARMENT CERTIFICATION

All bidders will be required to certify that they are not on the GSA List of Parties Excluded from Procurement and the List of Contractors Suspended or Debarred from Contracting with the State of Maryland. All bidders must also be in good standing with the State Assessment & Taxation Department.

16. CONTRACTOR'S QUESTIONNAIRE

All Bidders shall submit a fully executed copy the Contractor's Questionnaire Pre-Award Evaluation Data Form with the bid package.

17. INSURANCE REQUIREMENTS

The Administration has chosen to provide Workers' Compensation, General Liability, Excess Liability, Builders Risk, Pollution Liability and Railroad Protective coverage on behalf of Contractors and subcontractors working on this project. This approach to project insurance is commonly called a wrap-up or owner controlled insurance program (OCIP). Specific information regarding Liability Insurance Requirements is contained in the Contract Specifications.

Please note that an Insurance Cost Worksheet must be included with each bid package.

18. USE OF BIDDER'S OWN FORCES

The bidder with his own forces shall perform not less than **fifty percent (50 %)** of the work at the project site.

19. BUY AMERICA REQUIREMENTS

This contract is subject to Section 165, "Buy America", of the Surface Transportation Assistant Act of 1982, U.S. Public Law 197-424, and regulations and/or guidance implementing this statutory provision issued by the Federal Transit Administration of the U.S. Department of Transportation. The contract is further subject to the Buy American Steel requirements of Chapter 02 of subtitle 11 of the Code of Maryland Regulations, Title 21, State Procurement Regulations.

20. CANCELLATION OR REJECTION OF BIDS

Notice to Contractors may be canceled in accordance with State Procurement Regulations.

The Administration reserves the right to reject any and all bids and/or waive technical defects if, in its judgment, the interests of the Administration so require.

STATE OF MARYLAND DEPARTMENT OF TRANSPORTATION
MARYLAND TRANSIT ADMINISTRATION
BID FORM
FOR
CONTRACT NO.: T-0208-0140

TO: MARYLAND TRANSIT ADMINISTRATION
ATTN: PROCUREMENT DIVISION
6 SAINT PAUL STREET, 7TH FLOOR
BALTIMORE, MD 21202-1614

BID OPENING DATE:
September 9, 2011
BID OPENING TIME:
2:00 PM

BID OF: _____
(Bidder's Name)

PROJECT DESCRIPTION:
This contract is for the construction of a MARC Layover Facility in the Washington, CD area near Ivy City. The proposed yard will be a 3 track stub-end configuration with the capacity for three additional tracks for future expansion, and will function as a mid-day layover facility for MARC electric and diesel hauled trains.

1. This bid is hereby submitted to the Maryland Transit Administration (hereinafter sometimes called the "Administration") in response to NOTICE TO CONTRACTORS dated _____ .

2. The UNDERSIGNED has thoroughly examined, acknowledges receipt of, and is familiar with the Contract Documents as well as the various instructions, information, and requirements covering the same, all as mentioned herein and in said NOTICE TO CONTRACTORS.

3. In compliance with said NOTICE TO CONTRACTORS the UNDERSIGNED hereby proposes to furnish all labor, equipment, and materials and perform all work described and in strict accordance with the provisions of the Contract Documents for the consideration of the amounts, lump sum and unit prices listed in the attached Unit Price Schedule, and agrees that, upon Notice of Award, within one hundred fifty (150) calendar days after the date of opening of bids, unless mutually extended, he will within ten (10) calendar days after receipt of the prescribed forms, execute the Contract and furnish a performance bond and payment bond (if such bonds are required by the Contract Documents) on forms furnished by the Administration with good and sufficient surety or sureties.

4. The UNDERSIGNED agrees and understands that the time of completion is as specified in the Special Provisions, unless the completion dates are extended as provided for in the Contract Documents.

5. The UNDERSIGNED agrees to pay liquidated damages in the amount specified in the Special Provisions for each and every calendar day after the completion date that the work remains incomplete unless an extension is granted as provided for in the Contract Documents.

APPENDIX C

FEDERAL MINIMUM WAGE REQUIREMENT

T-0208-0140
MARC WEDGE STORAGE YARD
AT UNION STATION

FEDERAL WAGE RATES

This Appendix contains the minimum wage rates to be paid for workers employed under this Contract on the jobsites in accordance with the supplementary General Provisions and the Wage Rate Decisions as defined below.

1. Wage rates - Decision No. DC100001 shall be used for all work at the District of Columbia sites as described in the Contract documents.

APPENDIX C

General Decision Number: DC100001 07/22/2011 DC1

Superseded General Decision Number: DC20080001

State: District of Columbia

Construction Types: Heavy (Heavy and Sewer and Water Line) and Highway

County: District of Columbia Statewide.

HEAVY CONSTRUCTION PROJECTS (Including Sewer and Water Lines); HIGHWAY CONSTRUCTION PROJECTS

Modification Number	Publication Date
0	03/12/2010
1	03/19/2010
2	04/23/2010
3	05/07/2010
4	06/11/2010
5	07/09/2010
6	07/23/2010
7	08/20/2010
8	09/24/2010
9	11/05/2010
10	12/10/2010
11	12/24/2010
12	01/07/2011
13	01/21/2011
14	04/15/2011
15	05/06/2011
16	06/03/2011
17	06/10/2011
18	07/01/2011
19	07/08/2011
20	07/22/2011

ASBE0024-001 10/01/2009

	Rates	Fringes
Asbestos Worker/Heat and Frost Insulator Includes the application of all insulating materials, protective coverings, coatings and finishes to all types of mechanical systems	$ 30.43	14.43

ASBE0024-002 10/01/2009

	Rates	Fringes
HAZARDOUS MATERIAL HANDLER Includes preparation, wetting, stripping, removal, scrapping,		

vacuuming, bagging and
disposing of all
insulation materials,
whether they contain
asbestos or not, from
mechanical systems.....$ 18.85 7.10

ASBE0024-005 10/01/2009

	Rates	Fringes
Fire Stop Technician.....	$ 24.10	6.94

Includes the application of materials or devices within or around penetrations and openings in all rated wall or floor assemblies, in order to prevent the pasage of fire, smoke of other gases. The application includes all components involved in creating the rated barrier at perimeter slab edges and exterior cavities, the head of gypsum board or concrete walls, joints between rated wall or floor components, sealing of penetrating items and blank openings.

BOIL0193-001 10/01/2009

	Rates	Fringes
Boilermakers:.....	$ 37.66	16.36

BRDC0001-001 05/03/2010

	Rates	Fringes
Bricklayer.....	$ 27.21	7.21

BRMD0001-004 04/25/2010

	Rates	Fringes
BRICKLAYER		
Refractory (Firebrick).....	$ 33.55	7.72

CARP0132-001 05/01/2010

	Rates	Fringes
Carpenter/Lather.....	$ 26.38	7.00
Piledriver.....	$ 24.48	7.80

CARP1831-001 04/01/2010

	Rates	Fringes
Carpenters:		
Millwrights.....	$ 27.91	10.90

CARP2311-002 05/01/2009

	Rates	Fringes
DIVER TENDER.....	$ 24.48	7.80

APPENDIX C

DIVER.....$ 36.13 7.80

---

* ELEC0026-001 06/01/2011

	Rates	Fringes
Electricians	$ 39.75	3%+13.10

ELEC0026-008 07/01/2003

	Rates	Fringes
Motor Repairmen		
Removal and reinstallation of electrical motors	$ 23.69	7.73+3%+a

a. PAID HOLIDAYS:
New Year's Day, Martin Luther King Jr.'s Birthday, Inauguration Day, Memorial Day, Fourth of July,Labor Day, Veterans Day,Thanksgiving Day, the day after Thanksgiving and Christmas Day or days designated as legal holidays by the Federal Government.

ELEC0070-001 05/04/2009

	Rates	Fringes
Line Construction:		
Cable Splicers	$ 30.06	18.75%+4.75
Equipment Mechanic	$ 21.82	19.75%+4.81
Equipment Operators	$ 30.06	18.75%+4.75
Groundman/Truck Driver	$ 15.34	19.75%+4.81
Line Truck with Auger	$ 20.09	19.75%+4.81
Linemen	$ 30.06	18.75%+4.75

ENGI0077-001 05/01/2011

	Rates	Fringes
Power equipment operators: (HEAVY AND HIGHWAY CONSTRUCTION)		
GROUP 1	$ 32.36	8.00+a+b
GROUP 2	$ 31.35	8.00+a+b
GROUP 3	$ 30.89	8.00+a
GROUP 4	$ 30.17	8.00+a
GROUP 5	$ 28.12	8.00+a
GROUP 6	$ 23.53	8.00+a
GROUP 7	$ 32.73	8.00+a

POWER EQUIPMENT OPERATORS CLASSIFICATIONS

GROUP 1: Tower Cranes and Cranes 100 ton and over.

GROUP 2: 35 ton cranes & above, tower & climbing cranes, derricks, concrete boom pump, drill rigs (equivalent to L & Double L), mole.

GROUP 3: Backhoes, cableways, cranes, cherry pickers, elevating graders, hoists, paving mixers, power

shovels,tunnel shovels. batch plants, shields, tunnel mining machines, gradalls, front end loaders, 3 1/2 cu. yds. and above, power driven wheel scoops and scrapers (50 cu. yds. struck capacity or above), rail tamper, draglines, boomcat, mucking machines, graders in tunnels, pile driving engines.

GROUP 4: Front end loaders below 3 1/2 cu. yds, boom trucks, hydraulic backhoes 1/2 yds. capacity or below rubber or track mounted, tug boats, power driven wheel scoops & scrapers, blade graders, motor graders, bulldozers, trenching machines, concrete mixer, speed swing pettibone, ballast regulator, concrete pump, mechanic, welder, mechanic welder, shotcrete machines, Hoeram, locomotive (standard, narrow gauge), tuggers.

GROUP 5: High lifts above 10 feet, boilers (skelton), asphalt spreaders, bullfloat finishing machines, concrete finishing machines, concrete spreaders, fine graders, air compressors, welding machines, pumps, generators, well points, deep wells, hydraulic pumps, elevators, freeze uniits, tunnel motorman or dinky operator, roller, conveyors, well drilling machines, grout pump, fireman.

GROUP 6: Fork lifts, ditch witch, bobcat 1/3 cu. yd. and below, space heaters, sweepers, assistant engineers, oilers.

GROUP 7: Master mechanic.

a. PAID HOLIDAYS: New Years Day, Inaugural Day, Decoration Day, Independence Day, Labor Day, Martin Luther King's Birthday, Veterans' Day, Thanksgiving Day, Friday after Thanksgiving and Christmas Day.

b. PREMIUM PAY:
Tower crane and cranes 100-ton and over to receive $1.00 per hour premium over Group One.

ENGI0077-002 06/01/2011

	Rates	Fringes
Power equipment operators: (PAVING AND INCIDENTAL GRADING)		
GROUP 1	$ 26.09	6.60
GROUP 2	$ 23.25	6.60
GROUP 3	$ 19.99	6.60
GROUP 4	$ 18.00	6.60
GROUP 5	$ 26.75	6.40

POWER EQUIPMENT OPERATORS CLASSIFICATIONS

GROUP 1: Gradall operator, Crane.
GROUP 2: Boom Truck, Milling Machine, Excavator, Rubber Tire Backhoe, Asphalt Paver, Asphalt Plant Engineer, Motor Grader, Track Loader, Rubber Tire Loader, Track Dozer, Concrete Paver.
GROUP 3: Broom Truck, Asphalt Roller.
GROUP 4: Air Compressor, Grade Rollers.
GROUP 5: Mechanic.

APPENDIX C

ENGI0077-003 07/01/2011

	Rates	Fringes
Power equipment operators: (SEWER, GAS AND WATER LINE CONSTRUCTION)		
GROUP 1	$ 23.23	6.72+a
GROUP 2	$ 22.83	6.72+a
GROUP 3	$ 22.32	6.72+a
GROUP 4	$ 22.00	6.72+a
GROUP 5	$ 21.18	6.72+a

POWER EQUIPMENT OPERATORS CLASSIFICATIONS

GROUP 1: Excavators, Cranes, Gradalls.

GROUP 2: Backhoes, Front-end Loaders, Fork alift/Lull, Bulldozers, Motor Graders. Qualified Mechanics, Hydraulic Tamper and Hoe Pack, Paving Mixers, Pile Driving Engines, Batch Plant, Concrete Pumps, Low-Boy Driver, Lube Truck.

GROUP 3: Trenching Machine, Well Drilling Machines, Concrete Mixers, Motor Graders, Truck Driver.

GROUP 4. Roller, Air Compressors, Pumps, Welding Machines, Well Points, Firemen.

GROUP 5: Oiler

a.PAID HOLIDAYS: New Year's Day, Inaugural Day, Washington's Birthday, Decoration Day, Independence Day, Labor Day, Veterans Day, Thanksgiving Day, Christmas Day and Martin Luther King's Birthday.

IRON0005-001 06/01/2009

	Rates	Fringes
Ironworkers: Structural, Ornamental and Chain Link Fence	$ 28.83	13.295

IRON0201-001 05/01/2009

	Rates	Fringes
Ironworkers: Reinforcing	$ 25.20	14.33

LABO0657-003 06/01/2010

	Rates	Fringes
Laborers: (HEAVY AND HIGHWAY AND SEWER & WATER LINES CONSTRUCTION)		
GROUP 1	$ 21.64	5.97
GROUP 2	$ 21.98	5.97

GROUP 3	$ 22.16	5.97
GROUP 4	$ 22.33	5.97
GROUP 5	$ 22.80	5.97
GROUP 6	$ 23.39	5.97
GROUP 7	$ 23.96	5.97
GROUP 8	$ 24.73	5.97

LABORERS CLASSIFICATIONS:

GROUP 1: Carloaders, choker setter, concrete crewman, crushed feeder, demolition laborers, including salvaging all material, loading, cleaning up, wrecking, dumpmen, flagmen, fence erector and installer (other than chain link), including installation and erection of fence, guard rails, medial rails, reference posts, guide posts and right-of-way markers, form strippers, general laborers, railroad track laborers, riprap man, scale man, stake jumper, structure mover, includes foundation, separation, preparation, cribbing, shoring, jacking and unloading of structures, water nozzleman, timber bucker and faller, truck loader, water boys, tool room men.

GROUP 2: Combined air and water nozzleman, cement handler, dope pot fireman (nonmechanical), form cleaning machine, mechanical railroad equipment (includes spiker, puller, tile cleaner, tamper, pipe wrapper, power driven wheelbarrows, operators of hand derricks, towmasters, scootcretes, buggymobiles and similar equipment), tamper or rammer operator, trestle scaffold builders over one tier high, power tool operator (gas, electric or pneumatic), sandblast or gunnite tailhose man, scaffold erector, (steel or wood), vibrator operator (up to 4 feet), asphalt cutter, mortar men, shorer and lagger, creosote material handler, corrosive enamel or equl, paver breaker and jackhammer operators.

GROUP 3: Multi-section pipe layer, non-metallic clay and concrete pipe layer (including caulker, collarman, jointer, rigger and jacker, thermal welder and corrugated metal culvert pipe layer.

GROUP 4: Asphalt block pneumatic cutter, asphalt roller, walker, chainsaw operator with attachment, concrete saw (walking), high scalers, jackhammer operator (using over 6 feet of steel), vibrator operator (4 feet and over), well point installer, air trac operator.

GROUP 5: Asphalt screeder, big drills, cut of the hole drills (1 1/2 " piston or larger), down the hole drills (3 1/2" piston or larger) gunnite or sandblaster nozzleman, asphalt raker, asphalt tamper, form setter, demolition torch operator, shotcrete nozzlemen and potman.

GROUP 6: Powderman, master form setters.

GROUP 7: Brick paver (asphalt block paver, asphalt block sawman, asphalt block grinder, hastings block or similar type)

GROUP 8: Licensed powdermen.

LABO0657-004 06/01/2010

	Rates	Fringes

APPENDIX C

Laborers: (HAZARDOUS WASTE
REMOVAL, EXCEPT ON MECHANICAL
SYSTEMS:
Preparation for, removing and
encapsulation of hazardous
materials from non-mechanical
systems)

Skilled Asbestos Abatement Laborers	$ 17.82	5.97
Skilled Toxic and Hazardous Waste Removal Laborers	$ 20.97	5.97

LABO0657-005 06/01/2010

	Rates	Fringes
Laborers: (TUNNEL, RAISE & SHAFT (FREE AIR) FOR HEAVY AND SEWER & WATER LINES CONSTRUCTION)		
GROUP 1	$ 22.41	5.97
GROUP 2	$ 23.10	5.97
GROUP 3	$ 24.85	5.97
GROUP 4	$ 25.60	5.97

LABORERS CLASSIFICATIONS:

GROUP 1: Brakeman, Bull Gang, Dumper, Trackmen, Concrete Man.

GROUP 2: Chuck Tender, Powdermen in Prime House, Form Setters and Movers, Nippers, Cableman, Houseman, Groutman, Bell or Signalman, Top or Bottom Vibrator Operator.

GROUP 3: Miners, Re-Bar Underground, Concrete or Gunnite Nozzlemen, Powdermen, Timbermen and Re-Timbermen, Wood Steel Including Liner plate or Other Support, Material Motorman, Caulkers, Diamond Drill Operators, Riggers, Cement Finishers-Underground, Welders and Burners, Shield Driver, Air Trac Operator, Shotcrete Nozzlemen and Potman.

GROUP 4: Mucking Machine Operator (Air).

LABO0657-006 06/01/2010

	Rates	Fringes
Laborers: (TUNNEL, RAISE AND SHAFT (COMPRESSED AIR) FOR HEAVY CONSTRUCTION ONLY		

Gauge Pressure (Pounds)	Work Period (Hours)		
1-14	7	$ 28.85	5.97
14-18	6	$ 33.95	5.97

FOOTNOTE: On any requirement for air pressure in excess of 18 PSI, work periods and rates should be negotiated at a pre-bid conference.

APPENDIX C

LABO0657-007 06/01/2010

	Rates	Fringes
Laborers: (PAVING AND INCIDENTAL GRADING)		
Asphalt Raker & Concrete Saw Operator	$ 18.42	4.90
Asphalt Shoveler	$ 17.84	4.90
Asphalt Tammer & Concrete Shoveler	$ 18.09	4.90
Jack Hammer	$ 18.51	4.90
Laborer	$ 17.70	4.90
Sand Setter & Form Setter	$ 19.10	4.90

LABO0657-008 06/01/2010

	Rates	Fringes
LABORERS (BRICK MASONRY WORK)		
Mason Tenders	$ 15.32	5.97
Scaffold Builders, Mortarmen	$ 16.20	5.97

MARB0002-003 05/01/2011

	Rates	Fringes
Marble & Stone Mason Includes Pointing, Caulking and Cleaning of All Types of Masonry, Brick, Stone and Cement Structures	$ 32.88	13.99

MARB0003-001 05/01/2010

	Rates	Fringes
Mosaic & Terrazzo Worker, Tile Layer		
Marble Mason and Tile Layer	$ 25.29	9.59
Terrazzo Worker	$ 26.04	9.59

MARB0003-004 05/01/2010

	Rates	Fringes
Marble, Tile & Terrazzo Finisher	$ 20.48	8.44

PAIN0051-001 06/01/2010

	Rates	Fringes
Painters:		
All Industrial Work	$ 27.68	7.86
Bridges, Heavy Highway, Lead Abatement and Flame/Thermal Spray	$ 31.32	7.86

APPENDIX C

Commercial and Mold Remediation, Painters, Wallcovers and Drywall Finishers	$ 24.64	7.86
Metal Polishing and Refinishing	$ 25.64	7.86

PLAS0891-001 05/01/2010

	Rates	Fringes
Cement Masons:		
HEAVY CONSTRUCTION ONLY	$ 27.15	9.58

PLAS0891-002 06/01/2007

	Rates	Fringes
Cement Masons: (PAVING & INCIDENTAL GRADING)		
Cement Masons	$ 17.35	4.35
Concrete Saw Operators	$ 17.35	4.35
Form Setters	$ 17.35	4.35

PLUM0005-001 08/01/2010

	Rates	Fringes
Plumbers	$ 37.67	14.69+a

a. PAID HOLIDAYS: Labor Day, Veterans' Day, Thanksgiving Day and the day after Thanksgiving, Christmas Day, New Year's Day, Martin Luther King's Birthday, Memorial Day and the Fourth of July.

PLUM0602-005 11/01/2010

	Rates	Fringes
Steamfitter, Refrigeration & Air Conditioning Mechanic	$ 36.87	16.72+a

a. PAID HOLIDAYS: New Year's Day, Martin Luther King's Birthday, Memorial Day, Independence Day, Labor Day, Veterans Day, Thanksgiving Day and the day after Thanksgiving and Christmas Day.

SHEE0100-001 07/01/2011

	Rates	Fringes
Sheet Metal Worker	$ 37.09	13.61

TEAM0639-001 06/01/2010

	Rates	Fringes
Truck drivers: (HEAVY & HIGHWAY CONSTRUCTION)		
Tractor trailer, Low Boy	$ 20.50	2.00+a

APPENDIX C

Truck Drivers.....$ 18.50 2.00+a

a. VACATION: Employees will receive one (1) week's paid vacation after one (1) year of service.

TEAM0639-005 06/01/2009

	Rates	Fringes
Truck drivers: (PAVING & INCIDENTAL GRADING)		
All paving projects where the grading is incidental to the paving	$ 18.00	4.00

WELDERS - Receive rate prescribed for craft performing operation to which welding is incidental.

Unlisted classifications needed for work not included within the scope of the classifications listed may be added after award only as provided in the labor standards contract clauses (29CFR 5.5 (a) (1) (ii)).

In the listing above, the "SU" designation means that rates listed under the identifier do not reflect collectively bargained wage and fringe benefit rates. Other designations indicate unions whose rates have been determined to be prevailing.

WAGE DETERMINATION APPEALS PROCESS

1.) Has there been an initial decision in the matter? This can be:

* an existing published wage determination
* a survey underlying a wage determination
* a Wage and Hour Division letter setting forth a position on a wage determination matter
* a conformance (additional classification and rate) ruling

On survey related matters, initial contact, including requests for summaries of surveys, should be with the Wage and Hour Regional Office for the area in which the survey was conducted because those Regional Offices have responsibility for the Davis-Bacon survey program. If the response from this initial contact is not satisfactory, then the process described in 2.) and 3.) should be followed.

With regard to any other matter not yet ripe for the formal process described here, initial contact should be with the Branch of Construction Wage Determinations. Write to:

Branch of Construction Wage Determinations
Wage and Hour Division

APPENDIX C

U.S. Department of Labor
200 Constitution Avenue, N.W.
Washington, DC 20210

2.) If the answer to the question in 1.) is yes, then an interested party (those affected by the action) can request review and reconsideration from the Wage and Hour Administrator (See 29 CFR Part 1.8 and 29 CFR Part 7). Write to:

Wage and Hour Administrator
U.S. Department of Labor
200 Constitution Avenue, N.W.
Washington, DC 20210

The request should be accompanied by a full statement of the interested party's position and by any information (wage payment data, project description, area practice material, etc.) that the requestor considers relevant to the issue.

3.) If the decision of the Administrator is not favorable, an interested party may appeal directly to the Administrative Review Board (formerly the Wage Appeals Board). Write to:

Administrative Review Board
U.S. Department of Labor
200 Constitution Avenue, N.W.
Washington, DC 20210

4.) All decisions by the Administrative Review Board are final.

==========

END OF GENERAL DECISION

MTA Maryland

MARYLAND TRANSIT ADMINISTRATION

MARYLAND DEPARTMENT OF TRANSPORTATION

Martin O'Malley, Governor • Anthony G. Brown, Lt. Governor
Beverley K. Swaim-Staley, Secretary • Ralign T. Wells, Administrator

TO: All Planholders

FROM: Maryland Transit Administration

SUBJECT: **ADDENDUM NO. 2**
Contract No.: T-0208-0140
MARC Wedge Storage Yard at Union Station

DATE: July 1, 2011

Enclosed and effective this date is Addendum No. 2 to the subject Contract. This addendum revises the following dates:

	Old Dates	**Revised Dates/Times**
Pre-bid Meeting	August 10, 2011	**July 13, 2011/10:00 a.m.**
Deadline for Questions	August 24, 2011	**July 27, 2011/COB**
Bid Opening	September 21, 2011	**August 25, 2011/2:00 p.m.**

A Site Visit will be held immediately following the Pre-Bid Meeting. **Anyone attending the site visit must come equipped with an orange safety vest and a hard hat.**

A conformed copy of the revised specification sections is attached. A list of the changes made to this contract is attached to this addendum. The Bidder shall acknowledge receipt of this addendum by completing and returning this form with the bid package. All other terms and conditions remain unchanged.

Sincerely,

Vanessa Ashe

Vanessa Ashe, Procurement Officer
Professional Services/Construction/Installation Section
Procurement Division

Acknowledgement of receipt of ADDENDUM # 2 to Solicitation #T-0208-0140

Vendor Name: _____

_____ _____

Authorized Representative's Signature Date

ADDENDUM NO.: 2
DATE: 07/01/11
CONTRACT NO.: T-0208-0140

The following additions, deletions, and modifications are hereby made a part of the Contract Documents of MARC Wedge Storage Yard at Union Station, Contract No.: T-0208-0140.

Item No.	Page	Modification
CONTRACT SPECIFICATIONS		
1	NTC pages 1 thru 7	**Notice to Contractors** – replace in its entirety. **Section 2, "Pre-Bid Meeting & Site Visit"** – revised pre-bid date **Section 3, "Deadline for Questions"** - revised deadline for questions date. **Section 4, "Bid Due Date & Time"** – revised bid opening date
3	BF 1 of 28	**Bid Form** – replace page 1 Revised the "**Bid Opening Date**" at top of page 1

STATE OF MARYLAND DEPARTMENT OF TRANSPORTATION
MARYLAND TRANSIT ADMINISTRATION
NOTICE TO CONTRACTORS

MARC WEDGE STORAGE YARD AT UNION STATION
CONTRACT NO.: T-0208-0140 DATE: June 15, 2011

1. DESCRIPTION OF WORK

This contract is for the construction of a MARC Layover Facility in the Washington, DC area near Ivy City. The proposed yard will be a 3 track stub-end configuration with the capacity for three additional tracks for future expansion, and will function as a mid-day layover facility for MARC electric and diesel hauled trains.

The estimated value for this work is in the range of $18,000,001 to $24,000,000.

2. PRE-BID MEETING & SITE VISIT

A Pre-Bid meeting for the purpose of explaining the Project will be held on **July 13, 2011 at 10:00 a.m.**, local time at the Administration Headquarters, 6 St. Paul Street, 7th Floor Conference Rooms 731-732, Baltimore, Maryland 21202-1614.

A Site Visit will be held immediately following the Pre-Bid Meeting. **Anyone attending the site visit must come equipped with an orange safety vest and a hard hat.**

It is strongly suggested that the person(s) responsible for the preparation of bid documents for bidders attend the Pre-Bid Meeting and the site visit. INSTRUCTIONS CRITICAL TO THE PREPARATION OF THE CONTRACT DOCUMENTS WILL BE PRESENTED AT THE PRE-BID MEETING.

3. DEADLINE FOR QUESTIONS

Questions regarding the work should be directed in writing to Vanessa Ashe at the Administration Offices or via Internet address vashe@mta.maryland.gov. Facsimile messages will not be accepted unless accompanied by telephone notification at (410) 767-3353. Our fax number is (410) 333-4810. Questions directed to this office must be received no later than **July 27, 2011** at the close of the business day. Questions should be submitted on company letterhead. No interpretations other than written shall be binding on the Administration.

4. BID DUE DATE & TIME

Sealed Bids addressed to the Maryland Transit Administration, Procurement Division, 6 St. Paul Street, Baltimore, Maryland 21202-1614, and marked **"Bid for Contract No. T-0208-0140, MARC Wedge Storage Yard At Union Station"**, will be received at the above address until but not after 2:00 P.M. local time, **August 25, 2011**. At that time, the Bids will be publicly opened and read aloud in Conference Room #742 at the same address. Hand delivered bids should be deposited in the Bid Box located on the 7th Floor before the 2:00 P.M. deadline. Any bids received after the date and time specified shall not be considered.

5. ELECTRONIC VERSION OF BID DOCUMENTS

The bid documents will be available by electronic means. The Bidder acknowledges and accepts full responsibility to ensure that the Bidder has made no changes to the Administration's bid documents. In the event of a conflict between the versions of the bid documents in the bidder's possession and the version maintained by the Procurement Officer, the version maintained by the Procurement Officer shall govern.

6. AVAILABILITY OF DOCUMENTS

Specifications may be downloaded from the MTA web site. Bidders will be required to register the first time specifications are downloaded and a login number will be assigned. This number should be used every time the bidder downloads the documents for this contract. Bidders must supply accurate information in order to receive notice of all subsequent addenda.

TO OBTAIN THE SPECIFICATIONS:
Visit MTA's website at (www.mta.maryland.gov) , follow the links for "Doing Business with the MTA" – "To view Procurements" - "Professional & Construction/Installation Section", and download the Specifications for this procurement.

TO OBTAIN THE DRAWINGS:
E-mail Vanessa Ashe at vashe@mta.maryland.gov requesting the contract drawings and supplying the following information: the contact person, company name, mailing address, phone # and e-mail address. The drawings (CD) will be mailed to you at no cost. You also have the option of picking up the CD containing the drawings at: 6 Saint Paul Street, Baltimore, MD 21202, Wm Donald Schaefer Bldg., 7th floor.

7. ADDENDA

Bidders are required to acknowledge all addenda with their bid package. Although the MTA endeavors to send out all addenda to this solicitation in a timely manner, it is the responsibility of the contractors to make sure they received all appropriate documents prior to the bid due date.

8. EMARYLAND MARKETPLACE REGULATIONS

"e-Maryland Marketplace" is an electronic commerce system administered by the Maryland Department of General Services.

This means that all such information is immediately available to subscribers to e-Maryland Marketplace. Because of the instant access afforded by e-Maryland Marketplace, it is recommended that all Bidders interested in doing business with Maryland State agencies subscribe to e-Maryland Marketplace at www.eMarylandMarketplace.com.

9. BID BOND

Each bid exceeding $100,000 must be accompanied by a Bid Bond in the amount of five percent (5%) of the Bid Price. Bid, payment, and performance security may be in the form of: (1) a bond executed by a surety company authorized to do business in the State; (2) a bond executed by an individual surety that meets certain criteria; (3) cash; (4) another form of security required by State or federal law; or (5) another form of security satisfactory to the unit awarding the contract. Sections 13-207, 13-216, 17-104 of the State Finance and Procurement Article, Annotated Code of Maryland.

10. PAYMENT AND PERFORMANCE BONDS

Payment and Performance Bonds in the amount of the Contract Price will be required by the awardees. Upon receiving notification of contract award, the Contractors shall deliver their bond to the MTA no later than the time the Contractors execute the contract. Bid, payment, and performance security may be in the form of: (1) a bond executed by a surety company authorized to do business in the State; (2) a bond executed by an individual surety that meets certain criteria; (3) cash; (4) another form of security required by State or federal law; or (5) another form of security satisfactory to the unit awarding the contract. Sections 13-207, 13-216, 17-104 of the State Finance and Procurement Article, Annotated Code of Maryland.

11. ELECTRONIC FUNDS TRANSFER

On every solicitation for a contract expected to exceed $200,000, bidders will be required to accept payments by electronic funds transfer (EFT) unless the State Comptroller's Office grants an exemption.

12. DISADVANTAGED BUSINESS ENTERPRISE PROGRAM

A. DISADVANTAGED BUSINESS ENTERPRISES ARE ENCOURAGED TO RESPOND TO THIS SOLICITATION NOTICE.

B. The Maryland Transit Administration hereby notifies all bidders that, in regard to any Contract entered into pursuant to this advertisement, Disadvantaged Business Enterprises will be afforded full opportunity to submit Bids in response to this Notice, and will not be subjected to discrimination on the basis of political or religious opinion or affiliation, race color, creed, sex, age or national origin in consideration for an award.

C. It is the goal of the Administration that Disadvantaged Business Enterprises participate in all Contracts. Each Contract will contain goals for Disadvantaged Business Enterprise participation on a contract-to-contract basis. A subcontracting goal of **18 percent (18 %)** has been established for this procurement. All bidders must submit with their bid a fully executed copy of the Certified DBE Utilization and Fair Solicitation Affidavit (MDOT DBE FORM A) and DBE Participation Schedule (MDOT DBE FORM B). If the bidder fails to submit these completed forms with the bid as required, the procurement officer shall deem the bid non-responsive or shall determine that the offer is not reasonably susceptible of being selected for award. ALL DBE FIRMS MUST BE CERTIFIED BY THE MARYLAND DEPARTMENT OF TRANSPORTATION. NO OTHER CERTIFICATIONS WILL BE ACCEPTED.

D. **A contractor may count toward its DBE goal 60 percent of its expenditures for materials and supplies required under the contract and obtained from a DBE regular dealer, and 100 percent of such expenditures to a DBE manufacturer. The DBE credited supplies may not exceed 60 percent of the entire contract goal.**

E. New versions of Sections 13-103, 13-104 and 14-303 of the State Finance and Procurement Article of the Maryland Code, relating to increased bid/proposal documentation of DBE commitments, are effective as of October 1, 2004. The Contract under this solicitation will be awarded in accordance with these new requirements. As a result, new bid submission requirements, including certain revised DBE documents, are in effect for this solicitation. These new requirements are set forth elsewhere in this solicitation.

F. As a result of the revisions to Sections 13-103, 13-104 and 14-303, certain existing portions of the Code of Maryland Regulations (COMAR) relating to post bid/proposal submission of DBE subcontractors are inconsistent with the revised statute. To the extent the provisions of COMAR relating to post bid identification of DBE subcontractors are inconsistent with the requirements of this solicitation, the requirements of this solicitation shall control the award of a Contract. Questions or concerns regarding the DBE requirements of this solicitation must be raised prior to the opening of bids or receipt of initial proposals

G. Effective on October 1, 2009, Minority Business Enterprise (MBE) firms may elect to be dually certification as woman-owned businesses and as members of an ethnic or racial category. For purposes of achieving any gender or ethnic/racial MBE participation subgoals in a particular contract, an MBE firm that has dual certification may participate in the contract either as a woman-owned business or as a business owned by a member of a racial or ethnic minority group, **but not both**.

WARNING – PLEASE READ:

- **A firm must be listed in the MDOT MBE/DBE Directory with the gender category in order to be used to meet the gender subgoal.**
- **A firm must be listed in the MDOT MBE/DBE Directory with an ethnic/racial category in order to be used to meet the ethnic/racial subgoal.**
- **A firm must be listed in the MDOT MBE/DBE Directory with both the gender and ethnic/racial categories in order for a contractor to have the option of selecting which of those categories it will use for the firm on a State contract.**
- **Contractors should designate whether the MBE firm will be used as a woman-owned business or as a business owned by a member of a racial/ethnic group before calculating the percentage of MBE participation goals and subgoals they intend to meet.**

Maryland's MBE/DBE Directory will reflect the dual certification status beginning October 1, 2009. You can access the MBE/DBE Directory at http://mbe.mdot.state.md.us. Firms with dual certification will now be listed as follows:

Example:
ABC Corporation, Inc.
123 Corporate Circle
Hanover, MD 21076
Female/African American
00-000

13. AFFIRMATIVE ACTION REQUIREMENTS

Bidders on this Work will be required to comply with MTA Affirmative Action Requirements and all applicable Equal Employment Opportunity Laws and Regulations.

14. FEDERAL FUNDING

Any contract resulting from bids submitted is subject to a Financial Assistance Contract between the Administration and the U.S. Department of Transportation. Federal funds will be used to finance **80%** of the cost of this contract.

15. SUSPENSION AND DEBARMENT CERTIFICATION

All bidders will be required to certify that they are not on the GSA List of Parties Excluded from Procurement and the List of Contractors Suspended or Debarred from Contracting with the State of Maryland. All bidders must also be in good standing with the State Assessment & Taxation Department.

16. CONTRACTOR'S QUESTIONNAIRE

All Bidders shall submit a fully executed copy the Contractor's Questionnaire Pre-Award Evaluation Data Form with the bid package.

17. INSURANCE REQUIREMENTS

The Administration has chosen to provide Workers' Compensation, General Liability, Excess Liability, Builders Risk, Pollution Liability and Railroad Protective coverage on behalf of Contractors and subcontractors working on this project. This approach to project insurance is commonly called a wrap-up or owner controlled insurance program (OCIP). Specific information regarding Liability Insurance Requirements is contained in the Contract Specifications.

Please note that an Insurance Cost Worksheet must be included with each bid package.

18. USE OF BIDDER'S OWN FORCES

The bidder with his own forces shall perform not less than **fifty percent (50 %)** of the work at the project site.

19. BUY AMERICA REQUIREMENTS

This contract is subject to Section 165, "Buy America", of the Surface Transportation Assistant Act of 1982, U.S. Public Law 197-424, and regulations and/or guidance implementing this statutory provision issued by the Federal Transit Administration of the U.S. Department of Transportation. The contract is further subject to the Buy American Steel requirements of Chapter 02 of subtitle 11 of the Code of Maryland Regulations, Title 21, State Procurement Regulations.

20. CANCELLATION OR REJECTION OF BIDS

Notice to Contractors may be canceled in accordance with State Procurement Regulations.

The Administration reserves the right to reject any and all bids and/or waive technical defects if, in its judgment, the interests of the Administration so require.

STATE OF MARYLAND DEPARTMENT OF TRANSPORTATION
MARYLAND TRANSIT ADMINISTRATION
BID FORM
FOR
CONTRACT NO.: T-0208-0140

TO: MARYLAND TRANSIT ADMINISTRATION
ATTN: PROCUREMENT DIVISION
6 SAINT PAUL STREET, 7TH FLOOR
BALTIMORE, MD 21202-1614

BID OPENING DATE:
August 25, 2011
BID OPENING TIME:
2:00 PM

BID OF: _____
(Bidder's Name)

PROJECT DESCRIPTION:
This contract is for the construction of a MARC Layover Facility in the Washington, CD area near Ivy City. The proposed yard will be a 3 track stub-end configuration with the capacity for three additional tracks for future expansion, and will function as a mid-day layover facility for MARC electric and diesel hauled trains.

1. This bid is hereby submitted to the Maryland Transit Administration (hereinafter sometimes called the "Administration") in response to NOTICE TO CONTRACTORS dated _____ .

2. The UNDERSIGNED has thoroughly examined, acknowledges receipt of, and is familiar with the Contract Documents as well as the various instructions, information, and requirements covering the same, all as mentioned herein and in said NOTICE TO CONTRACTORS.

3. In compliance with said NOTICE TO CONTRACTORS the UNDERSIGNED hereby proposes to furnish all labor, equipment, and materials and perform all work described and in strict accordance with the provisions of the Contract Documents for the consideration of the amounts, lump sum and unit prices listed in the attached Unit Price Schedule, and agrees that, upon Notice of Award, within one hundred fifty (150) calendar days after the date of opening of bids, unless mutually extended, he will within ten (10) calendar days after receipt of the prescribed forms, execute the Contract and furnish a performance bond and payment bond (if such bonds are required by the Contract Documents) on forms furnished by the Administration with good and sufficient surety or sureties.

4. The UNDERSIGNED agrees and understands that the time of completion is as specified in the Special Provisions, unless the completion dates are extended as provided for in the Contract Documents.

5. The UNDERSIGNED agrees to pay liquidated damages in the amount specified in the Special Provisions for each and every calendar day after the completion date that the work remains incomplete unless an extension is granted as provided for in the Contract Documents.

MTA Maryland

MARYLAND TRANSIT ADMINISTRATION

MARYLAND DEPARTMENT OF TRANSPORTATION

Martin O'Malley, Governor • Anthony G. Brown, Lt. Governor
Beverley K. Swaim-Staley, Secretary • Ralign T. Wells, Administrator

TO: All Planholders

FROM: Maryland Transit Administration

SUBJECT: **ADDENDUM NO. 1**
Contract No.: T-0208-0140
MARC Wedge Storage Yard At Union Station

DATE: June 28, 2011

Enclosed and effective this date is Addendum No. 1 to the subject Contract. This addendum revises the following dates:

	Old Dates	**Revised Dates/Times**
Pre-bid Meeting	June 29, 2011	**August 10, 2011/10:00 a.m.**
Deadline for Questions	July 15, 2011	**August 24, 2011/COB**
Bid Opening	August 11, 2011	**September 21, 2011/2:00 p.m.**

A conformed copy of the revised specification sections is attached. A list of the changes made to this contract is attached to this addendum. The Bidder shall acknowledge receipt of this addendum by completing and returning this form with the bid package. All other terms and conditions remain unchanged.

Sincerely,

Vanessa Ashe

Vanessa Ashe, Procurement Officer
Professional Services/Construction/Installation Section
Procurement Division

Acknowledgement of receipt of ADDENDUM # 1 to Solicitation #T-0208-0140

Vendor Name: _____

_____ _____

Authorized Representative's Signature Date

ADDENDUM NO.: 1
DATE: 06/28/11
CONTRACT NO.: T-0208-0140

The following additions, deletions, and modifications are hereby made a part of the Contract Documents of MARC Wedge Storage Yard At Union Station, Contract No.: T-0208-0140.

Item No.	Page	Modification
CONTRACT SPECIFICATIONS		
1	TOC page 1 of 8	**Table of Contents** – replace page 1 Corrected the page numbering for Bid/Proposal Affidavit and Liability Insurance Requirements
2	NTC pages 1 thru 7	**Notice to Contractors** – replace in its entirety. **Section 1, "Description of Work"** – added the estimated range of the work **Section 2, "Pre-Bid Meeting & Site Visit"** – revised pre-bid date and time and added additional information to second paragraph about requirements for site visit. **Section 3, "Deadline for Questions"** - revised deadline for questions date. **Section 4, "Bid Due Date & Time"** – revised bid opening date and included conference room number.
3	BF 1 of 28	**Bid Form** – replace page 1 Revised the "**Bid Opening Date**" at top of page 1

MARC WEDGE STORAGE YARD AT UNION STATION
CONTRACT NO. 0208-0140
CONTRACT SPECIFICATIONS BOOK

TABLE OF CONTENTS

DESCRIPTION	PAGE NO.
NOTICE TO CONTRACTORS	NTC 1–7
VENDORS COMMENTS	VC 1
BID FORM INCLUDING UNIT PRICE SCHEDULE	BF 1–28
BID BOND	BB 1– 2
AFFIDAVIT OF INDIVIDUAL SURETY & APPENDIX	AIS 1–5
BID/PROPOSAL AFFIDAVIT	BPA 1–7
CONTRACTOR QUESTIONNAIRE	CQ 1–5
BUY AMERICA CERTIFICATE STEEL	BAC 1
CERTIFICATION REGARDING LOBBYING	CRL 1
DBE REQUIREMENTS	DBE 1–9
LIABILITY INSURANCE REQUIREMENTS	IR 1–28
SUBCONTRACTOR UTILIZATION INFORMATION FORM	SUI 1– 2
PAYMENT BY ELECTRONIC FUNDS TRANSFER	EFT 1–3
CONTRACT AGREEMENT	C 1–2
CONTRACT AFFIDAVIT	CA 1
SURETY BOND ASSISTANCE PROGRAM	SBAP 1
PAYMENT BOND	PA 1–4
PERFORMANCE BOND	PE 1– 3
BID PROTEST	BP 1
MTA PROJECT SAFETY PLAN	PSP 1–63
GENERAL PROVISIONS FOR CONSTRUCTION CONTRACTS (MARYLAND DOT)	GP 1–68
SUPPLEMENTAL GENERAL PROVISIONS FOR CONSTRUCTION CONTRACTS (MTA)	SGP 1– 48

STATE OF MARYLAND DEPARTMENT OF TRANSPORTATION
MARYLAND TRANSIT ADMINISTRATION
NOTICE TO CONTRACTORS

MARC WEDGE STORAGE YARD AT UNION STATION
CONTRACT NO.: T-0208-0140 DATE: June 15, 2011

1. DESCRIPTION OF WORK

This contract is for the construction of a MARC Layover Facility in the Washington, DC area near Ivy City. The proposed yard will be a 3 track stub-end configuration with the capacity for three additional tracks for future expansion, and will function as a mid-day layover facility for MARC electric and diesel hauled trains.

The estimated value for this work is in the range of $18,000,001 to $24,000,000.

2. PRE-BID MEETING & SITE VISIT

A Pre-Bid meeting for the purpose of explaining the Project will be held on **August 10, 2011 at 10:00 a.m.**, local time at the Administration Headquarters, 6 St. Paul Street, 7th Floor Conference Rooms 731-732, Baltimore, Maryland 21202-1614.

A Site Visit will be held immediately following the Pre-Bid Meeting. **Anyone attending this site visit must come equipped with an orange safety vest and a hard hat.**

It is strongly suggested that the person(s) responsible for the preparation of bid documents for bidders attend the Pre-Bid Meeting and the site visit. INSTRUCTIONS CRITICAL TO THE PREPARATION OF THE CONTRACT DOCUMENTS WILL BE PRESENTED AT THE PRE-BID MEETING.

3. DEADLINE FOR QUESTIONS

Questions regarding the work should be directed in writing to Vanessa Ashe at the Administration Offices or via Internet address vashe@mta.maryland.gov. Facsimile messages will not be accepted unless accompanied by telephone notification at (410) 767-3353. Our fax number is (410) 333-4810. Questions directed to this office must be received no later than **August 24, 2011** at the close of the business day. Questions should be submitted on company letterhead. No interpretations other than written shall be binding on the Administration.

4. BID DUE DATE & TIME

Sealed Bids addressed to the Maryland Transit Administration, Procurement Division, 6 St. Paul Street, Baltimore, Maryland 21202-1614, and marked **"Bid for Contract No. T-0208-0140, MARC Wedge Storage Yard At Union Station"**, will be received at the above address until but not after 2:00 P.M. local time, **September 21, 2011**. At that time, the Bids will be publicly opened and read aloud **in Conference Room #742** at the same address. Hand delivered bids should be deposited in the Bid Box located on the 7th Floor before the 2:00 P.M. deadline. Any bids received after the date and time specified shall not be considered.

5. ELECTRONIC VERSION OF BID DOCUMENTS

The bid documents will be available by electronic means. The Bidder acknowledges and accepts full responsibility to ensure that the Bidder has made no changes to the Administration's bid documents. In the event of a conflict between the versions of the bid documents in the bidder's possession and the version maintained by the Procurement Officer, the version maintained by the Procurement Officer shall govern.

6. AVAILABILITY OF DOCUMENTS

Specifications may be downloaded from the MTA web site. Bidders will be required to register the first time specifications are downloaded and a login number will be assigned. This number should be used every time the bidder downloads the documents for this contract. Bidders must supply accurate information in order to receive notice of all subsequent addenda.

TO OBTAIN THE SPECIFICATIONS:
Visit MTA's website at (www.mta.maryland.gov) , follow the links for "Doing Business with the MTA" – "To view Procurements" - "Professional & Construction/Installation Section", and download the Specifications for this procurement.

TO OBTAIN THE DRAWINGS:
E-mail Vanessa Ashe at vashe@mta.maryland.gov requesting the contract drawings and supplying the following information: the contact person, company name, mailing address, phone # and e-mail address. The drawings (CD) will be mailed to you at no cost. You also have the option of picking up the CD containing the drawings at: 6 Saint Paul Street, Baltimore, MD 21202, Wm Donald Schaefer Bldg., 7th floor.

7. ADDENDA

Bidders are required to acknowledge all addenda with their bid package. Although the MTA endeavors to send out all addenda to this solicitation in a timely manner, it is the responsibility of the contractors to make sure they received all appropriate documents prior to the bid due date.

8. EMARYLAND MARKETPLACE REGULATIONS

"e-Maryland Marketplace" is an electronic commerce system administered by the Maryland Department of General Services.

This means that all such information is immediately available to subscribers to e-Maryland Marketplace. Because of the instant access afforded by e-Maryland Marketplace, it is recommended that all Bidders interested in doing business with Maryland State agencies subscribe to e-Maryland Marketplace at www.eMarylandMarketplace.com.

9. BID BOND

Each bid exceeding $100,000 must be accompanied by a Bid Bond in the amount of five percent (5%) of the Bid Price. Bid, payment, and performance security may be in the form of: (1) a bond executed by a surety company authorized to do business in the State; (2) a bond executed by an individual surety that meets certain criteria; (3) cash; (4) another form of security required by State or federal law; or (5) another form of security satisfactory to the unit awarding the contract. Sections 13-207, 13-216, 17-104 of the State Finance and Procurement Article, Annotated Code of Maryland.

10. PAYMENT AND PERFORMANCE BONDS

Payment and Performance Bonds in the amount of the Contract Price will be required by the awardees. Upon receiving notification of contract award, the Contractors shall deliver their bond to the MTA no later than the time the Contractors execute the contract. Bid, payment, and performance security may be in the form of: (1) a bond executed by a surety company authorized to do business in the State; (2) a bond executed by an individual surety that meets certain criteria; (3) cash; (4) another form of security required by State or federal law; or (5) another form of security satisfactory to the unit awarding the contract. Sections 13-207, 13-216, 17-104 of the State Finance and Procurement Article, Annotated Code of Maryland.

11. ELECTRONIC FUNDS TRANSFER

On every solicitation for a contract expected to exceed $200,000, bidders will be required to accept payments by electronic funds transfer (EFT) unless the State Comptroller's Office grants an exemption.

12. DISADVANTAGED BUSINESS ENTERPRISE PROGRAM

A. DISADVANTAGED BUSINESS ENTERPRISES ARE ENCOURAGED TO RESPOND TO THIS SOLICITATION NOTICE.

B. The Maryland Transit Administration hereby notifies all bidders that, in regard to any Contract entered into pursuant to this advertisement, Disadvantaged Business Enterprises will be afforded full opportunity to submit Bids in response to this Notice, and will not be subjected to discrimination on the basis of political or religious opinion or affiliation, race color, creed, sex, age or national origin in consideration for an award.

C. It is the goal of the Administration that Disadvantaged Business Enterprises participate in all Contracts. Each Contract will contain goals for Disadvantaged Business Enterprise participation on a contract-to-contract basis. A subcontracting goal of **18 percent (18 %)** has been established for this procurement. All bidders must submit with their bid a fully executed copy of the Certified DBE Utilization and Fair Solicitation Affidavit (MDOT DBE FORM A) and DBE Participation Schedule (MDOT DBE FORM B). If the bidder fails to submit these completed forms with the bid as required, the procurement officer shall deem the bid non-responsive or shall determine that the offer is not reasonably susceptible of being selected for award. ALL DBE FIRMS MUST BE CERTIFIED BY THE MARYLAND DEPARTMENT OF TRANSPORTATION. NO OTHER CERTIFICATIONS WILL BE ACCEPTED.

D. **A contractor may count toward its DBE goal 60 percent of its expenditures for materials and supplies required under the contract and obtained from a DBE regular dealer, and 100 percent of such expenditures to a DBE manufacturer. The DBE credited supplies may not exceed 60 percent of the entire contract goal.**

E. New versions of Sections 13-103, 13-104 and 14-303 of the State Finance and Procurement Article of the Maryland Code, relating to increased bid/proposal documentation of DBE commitments, are effective as of October 1, 2004. The Contract under this solicitation will be awarded in accordance with these new requirements. As a result, new bid submission requirements, including certain revised DBE documents, are in effect for this solicitation. These new requirements are set forth elsewhere in this solicitation.

F. As a result of the revisions to Sections 13-103, 13-104 and 14-303, certain existing portions of the Code of Maryland Regulations (COMAR) relating to post bid/proposal submission of DBE subcontractors are inconsistent with the revised statute. To the extent the provisions of COMAR relating to post bid identification of DBE subcontractors are inconsistent with the requirements of this solicitation, the requirements of this solicitation shall control the award of a Contract. Questions or concerns regarding the DBE requirements of this solicitation must be raised prior to the opening of bids or receipt of initial proposals

G. Effective on October 1, 2009, Minority Business Enterprise (MBE) firms may elect to be dually certification as woman-owned businesses and as members of an ethnic or racial category. For purposes of achieving any gender or ethnic/racial MBE participation subgoals in a particular contract, an MBE firm that has dual certification may participate in the contract either as a woman-owned business or as a business owned by a member of a racial or ethnic minority group, **but not both**.

WARNING – PLEASE READ:

- **A firm must be listed in the MDOT MBE/DBE Directory with the gender category in order to be used to meet the gender subgoal.**
- **A firm must be listed in the MDOT MBE/DBE Directory with an ethnic/racial category in order to be used to meet the ethnic/racial subgoal.**
- **A firm must be listed in the MDOT MBE/DBE Directory with both the gender and ethnic/racial categories in order for a contractor to have the option of selecting which of those categories it will use for the firm on a State contract.**
- **Contractors should designate whether the MBE firm will be used as a woman-owned business or as a business owned by a member of a racial/ethnic group before calculating the percentage of MBE participation goals and subgoals they intend to meet.**

Maryland's MBE/DBE Directory will reflect the dual certification status beginning October 1, 2009. You can access the MBE/DBE Directory at http://mbe.mdot.state.md.us. Firms with dual certification will now be listed as follows:

Example:
ABC Corporation, Inc.
123 Corporate Circle
Hanover, MD 21076
Female/African American
00-000

13. AFFIRMATIVE ACTION REQUIREMENTS

Bidders on this Work will be required to comply with MTA Affirmative Action Requirements and all applicable Equal Employment Opportunity Laws and Regulations.

14. FEDERAL FUNDING

Any contract resulting from bids submitted is subject to a Financial Assistance Contract between the Administration and the U.S. Department of Transportation. Federal funds will be used to finance **80%** of the cost of this contract.

15. SUSPENSION AND DEBARMENT CERTIFICATION

All bidders will be required to certify that they are not on the GSA List of Parties Excluded from Procurement and the List of Contractors Suspended or Debarred from Contracting with the State of Maryland. All bidders must also be in good standing with the State Assessment & Taxation Department.

16. CONTRACTOR'S QUESTIONNAIRE

All Bidders shall submit a fully executed copy the Contractor's Questionnaire Pre-Award Evaluation Data Form with the bid package.

17. INSURANCE REQUIREMENTS

The Administration has chosen to provide Workers' Compensation, General Liability, Excess Liability, Builders Risk, Pollution Liability and Railroad Protective coverage on behalf of Contractors and subcontractors working on this project. This approach to project insurance is commonly called a wrap-up or owner controlled insurance program (OCIP). Specific information regarding Liability Insurance Requirements is contained in the Contract Specifications.

Please note that an Insurance Cost Worksheet must be included with each bid package.

18. USE OF BIDDER'S OWN FORCES

The bidder with his own forces shall perform not less than **fifty percent (50 %)** of the work at the project site.

19. BUY AMERICA REQUIREMENTS

This contract is subject to Section 165, "Buy America", of the Surface Transportation Assistant Act of 1982, U.S. Public Law 197-424, and regulations and/or guidance implementing this statutory provision issued by the Federal Transit Administration of the U.S. Department of Transportation. The contract is further subject to the Buy American Steel requirements of Chapter 02 of subtitle 11 of the Code of Maryland Regulations, Title 21, State Procurement Regulations.

20. CANCELLATION OR REJECTION OF BIDS

Notice to Contractors may be canceled in accordance with State Procurement Regulations.

The Administration reserves the right to reject any and all bids and/or waive technical defects if, in its judgment, the interests of the Administration so require.

STATE OF MARYLAND DEPARTMENT OF TRANSPORTATION
MARYLAND TRANSIT ADMINISTRATION
BID FORM
FOR
CONTRACT NO.: T-0208-0140

TO: MARYLAND TRANSIT ADMINISTRATION
ATTN: PROCUREMENT DIVISION
6 SAINT PAUL STREET, 7TH FLOOR
BALTIMORE, MD 21202-1614

BID OPENING DATE:
September 21, 2011
BID OPENING TIME:
2:00 PM

BID OF: _____
(Bidder's Name)

PROJECT DESCRIPTION:
This contract is for the construction of a MARC Layover Facility in the Washington, CD area near Ivy City. The proposed yard will be a 3 track stub-end configuration with the capacity for three additional tracks for future expansion, and will function as a mid-day layover facility for MARC electric and diesel hauled trains.

1. This bid is hereby submitted to the Maryland Transit Administration (hereinafter sometimes called the "Administration") in response to NOTICE TO CONTRACTORS dated _____ .

2. The UNDERSIGNED has thoroughly examined, acknowledges receipt of, and is familiar with the Contract Documents as well as the various instructions, information, and requirements covering the same, all as mentioned herein and in said NOTICE TO CONTRACTORS.

3. In compliance with said NOTICE TO CONTRACTORS the UNDERSIGNED hereby proposes to furnish all labor, equipment, and materials and perform all work described and in strict accordance with the provisions of the Contract Documents for the consideration of the amounts, lump sum and unit prices listed in the attached Unit Price Schedule, and agrees that, upon Notice of Award, within one hundred fifty (150) calendar days after the date of opening of bids, unless mutually extended, he will within ten (10) calendar days after receipt of the prescribed forms, execute the Contract and furnish a performance bond and payment bond (if such bonds are required by the Contract Documents) on forms furnished by the Administration with good and sufficient surety or sureties.

4. The UNDERSIGNED agrees and understands that the time of completion is as specified in the Special Provisions, unless the completion dates are extended as provided for in the Contract Documents.

5. The UNDERSIGNED agrees to pay liquidated damages in the amount specified in the Special Provisions for each and every calendar day after the completion date that the work remains incomplete unless an extension is granted as provided for in the Contract Documents.