MARYLAND TRANSIT ADMINISTRATION
MARYLAND DEPARTMENT OF TRANSPORTATION
Martin O'Malley, Governor • Anthony G. Brown, Lt. Governor
James T. Smith, Jr., Secretary • Robert L. Smith, Administrator

TO: All Planholders

FROM: Maryland Transit Administration

SUBJECT: **Addendum No.4**
Contract No.: T-0590-3140
Centerville Freight Rail Line Permanent Repairs

DATE: November 12, 2013

Enclosed and effective this date is Addendum No.4 to the subject Solicitation. This addendums provides clarification to Part 4 "Measurement and Payment" and Revise the Bid Form. Please insert revised page 6 of 11 of the Bid Form.

This Addendum **changes** the due date for bids. The Bid opening has been changed to **November 19, 2013 at 2:00 p.m., 6 St. Paul Street, Conference Room #742.**

A conformed copy of the entire specifications may be downloaded from the MTA web site (www.mta.maryland.gov). A list of the changes made to this contract is attached to this Addendum.

The Bidder shall acknowledge receipt of this Addendum by completing and returning this form with the bid package. All other terms and conditions remain unchanged.

Sincerely,

Hattie Crosby, Chief of Construction/Installation Section
Procurement Division

Acknowledgement of receipt of ADDENDUM # 4 to Solicitation #T-0590-3140

Vendor Name: _____

_____ _____
Authorized Representative's Signature Date

PART 4: MEASUREMENT AND PAYMENT

4.01 TEST PILES:

A. The quantity to be paid for **Test Piles** will be the length, in feet, of steel H Pile furnished, dynamically load tested, that is, the installation was monitored with PDA as specify in ASTM D4945, and accepted by the Engineer, measured from pile tip to pile cutoff elevation. Price and payment for Test Piles will be in full compensation for all incidentals necessary to complete all the work to furnish and install each dynamically load tested pile as specified herein and in the Plans, including any pile splices.

4.02 PRODUCTION PILES:

A. The quantity to be paid for **Production Piles** will be the length, in feet, of steel H Pile furnished, driven and accepted by the Engineer, measured from pile tip to pile cutoff elevation. Price and payment for Production Piles will be in full compensation for all labor, equipment, and materials required to furnishing and installing steel H production piles, including any pile splices, welding and painting, of the size and at the locations specified in the Plans, and as specified by the approved driving criteria.

4.03 HIGH STRAIN DYNAMIC PILE TESTING

A. High-Strain Dynamic Pile Testing by Contractor will not be measured separately and will be incidental to **Test Piles**. Dynamic load testing will be as shown in the plans or authorized by the Engineer, completed and accepted in accordance with the requirements presented herein upon receipt and acceptance of the associated dynamic testing report(s). Payment will include all cost related to dynamic testing as specified herein and in the Plans, including initial instrumented drive, and up to two **instrumented restrikes 48 hours after initial drive or as directed by the** Engineer, with all respective signal matching and pile wave equation analyses, and development of required Construction Documents described in the SUBMITAL Section above.

B. In the event the Engineer requires an additional instrumented restrike, 1/2 the payment for a dynamic load test will be added to the payment for the requested restrike. No separate payment will be made for dynamic load tests used to evaluate hammer performance when requested by the Engineer. This will generally be done on the first test pile or production pile driven with each combination of proposed hammers and pile sizes, or piles driven to evaluate proposed changes in the driving system.

C. When dynamic load tests are request by the Engineer on Production Piles, the all cost associated with High Strain Dynamic Load Testing by Contractor will be made as 20 feet of additional production pile length.

END OF SECTION

20	02370	Temporary Mulching	50	SY		
21	02370	Temporary Seeding	5	LB		
22	02375	Riprap (Class I)	156	SY		
23	02375	Riprap (Class II)	21	SY		
24	02455	Production Piles	1081	LF		
25	02455	Test Piles	57	LF		
26	02650	Place 6 In. Perforated Underdrain	168	LF		
27	02725	Subballast	195	CY		
28	02726	Ballast	90	TON		
29	02920	Furnishing and Placing 4" Topsoil	50	SY		

MARYLAND TRANSIT ADMINISTRATION

MARYLAND DEPARTMENT OF TRANSPORTATION
Martin O'Malley, Governor • Anthony G. Brown, Lt. Governor
James T. Smith, Jr., Secretary • Robert L. Smith, Administrator

TO: All Planholders

FROM: Maryland Transit Administration

SUBJECT: **Addendum No. 3**
Contract No.: T-0590-3140
Centerville Freight Rail Line Permanent Repairs

DATE: October 31, 2013

Enclosed and effective this date is Addendum No.3 to the subject Solicitation. This addendums provides the Following: (1). The New State Law regarding Liquidated Damages for non-compliance of the MBE requirements, (2) Responses to Contractor's Question, (3) Sign-in Sheet from the Site Visit (4) Revised Special Provisions and changes to the (5) Drawings ENSC.

This Addendum **will not** revised the due date for bids. The Bid opening remains unchanged **November 14, 2013 at 2:00 p.m., 6 St. Paul Street, Conference Room #742.**

A conformed copy of the entire specifications may be downloaded from the MTA web site (www.mta.maryland.gov). A list of the changes made to this contract is attached to this Addendum.

The Bidder shall acknowledge receipt of this Addendum by completing and returning this form with the bid package. All other terms and conditions remain unchanged.

Sincerely,

Hattie Crosby, Chief of Construction/Installation Section
Procurement Division

Acknowledgement of receipt of ADDENDUM # 3 to Solicitation #T-0590-3140

Vendor Name: _____

_____ _____
Authorized Representative's Signature Date

"MBE Liquidated Damages Provision"

This contract requires the contractor to make good faith efforts to comply with the Minority Business Enterprise ("MBE") Program and contract provisions. The State and the Contractor acknowledge and agree that the State will incur damages, including but not limited to loss of goodwill, detrimental impact on economic development, and diversion of internal staff resources, if the Contractor does not make good faith efforts to comply with the requirements of the MBE Program and MBE contract provisions. The parties further acknowledge and agree that the damages the State might reasonably be anticipated to accrue as a result of such lack of compliance are difficult to ascertain with precision.

Therefore, upon a determination by the State that the Contractor failed to make good faith efforts to comply with one or more of the specified MBE Program requirements or contract provisions, the Contractor agrees to pay liquidated damages to the State at the rates set forth below. The Contractor expressly agrees that the State may withhold payment on any invoices as a set-off against liquidated damages owed. The Contractor further agrees that for each specified violation, the agreed upon liquidated damages are reasonably proximate to the loss the State is anticipated to incur as a result of such violation.

a. Failure to submit each monthly payment report in full compliance with COMAR 21.11.03.13B (3): **$26.52 per day** until the monthly report is submitted as required.

b. Failure to include in its agreements with MBE subcontractors a provision requiring submission of payment reports in full compliance with COMAR 21.11.03.13B (4): **$92.82 per MBE subcontractor**.

c. Failure to comply with COMAR 21.11.03.12 in terminating, canceling, or changing the scope of work/value of a contract with an MBE subcontractor and/or amendment of the MBE participation schedule: the difference between the dollar value of the MBE participation commitment on the MBE participation schedule for that specific MBE firm and the dollar value of the work performed by that MBE firm for the contract.

d. Failure to meet the Contractor's total MBE participation goal and subgoal commitments: the difference between the dollar value of the total MBE participation commitment on the MBE participation schedule and the MBE participation actually achieved.

Notwithstanding the use of liquidated damages, the State reserves the right to terminate the contract and exercise all other rights and remedies provided in the contract or by law.

Centerville Freight Rail Line Permanent Reparis
CONTRACT NO. T-0590-3140
October 31, 2013 Addendum No. 3

#	QUESTIONS		AGENCY RESPONSES
1	Section 05671 Ballasted Track Installaion seems to be taken from a light rail project. MDDE Railroads is a shortline. Bonded Joints, track to earth testing, Sample testing, e-clips etc. are examples of things not found on existing railroads		Revised Section 05671 is being issued as part of Addendum No. 3.
2	Can the 115RE new raill be IQ?		Yes
3	Does rail griding need to be done?		No
4	What type of tie plates shall be used on wooden ties? Pandrol or standard double shoulder plates for 115RE?		New, standard double shoulder plates shall be used on timber ties for 115RE rail. Use good condition (not bent, chipped, broken or worn in either thickness or the shoulder) second hand tie plates where necessary for the 85PS rail.
5	Are Crosstie anchors to be installed?		Yes
6	Are tie pads to be used		No
7	Is a derail to be installed anywhere per Section 05653?		No
8	I an MBE is a Prime Contractor, does the MBE Contractor have to subcontract to an MBE to meet the required MBE goal?		Yes, an MBE contractor must meet and comply with the MBE subconracting goal requirement.
	T-0590-3140		Addendum No. 3

Contract No. T-590-3140
Centreville Freight Rail Line Permanent Repairs

Site Visit
October 16, 2013

SIGN-IN LIST

Name	Company/MTA Division	Phone	E-Mail
Rich Rhinehart	Rhinehart R.R.	410-879-1322	richsr@rhinehartrailroad.com
CARLEY A. CHANEY	AMTRAK TCR CONTS	301-797-3730	CCHANEY@AMTRAKMD.COM
FRANK KERNAN	MTA QA/QC (PB)	(410) 767-3333	Fkernan@mta.maryland.gov
NORMAN TUER	Bullock Const.	410-829-8385	Norman@Bullockrailroad.com
Josh Bullock	Bullock	410-763-7250	josh@bullockrailroad.com
Joe Thompson	A-Del	302-383-0924	Jthompson@A-Del.com
Jeff Norman	George & Lynch	302-342-3126	jnorman@geolyn.com
Jason Cosler	WR&A	443-234-1559	jcosler@wrallp.com
Bob Sasseer	MTA CM	410 271 5629	rsasseer@mta.maryland.gov
ARTHUR TWES	MTA QA/QC	410-767-3342	ATwes@mta.maryland.gov
Mike Hunt	MTA T&S	410-767-3826	Mhant@MTA.maryland.gov
Wm Sumpter	AMT Contractor	410-928-3185	

SECTION 05650

GENERAL REQUIREMENTS FOR TRACK INSTALLATION

PART 1: GENERAL

1.01 DESCRIPTION:

A. This Section provides general information concerning track installation. Track installation shall be primary track, only, for this Contract. For this project, primary track shall be ballasted track.

1. Primary track shall be continuous welded rail (CWR) installation throughout including special track work locations. Insulated joints in primary track shall be bonded type.

2. All rail for this project shall be high strength rail.

B. The various types of track components in the Work are specified herein and include:

1. Ballast: Section 02726.
2. Subballast: Section 02725.
3. Track Material: Section 05653.
4. Joints and Joint Bars: Section 05665.
5. Ballasted Track Installation: Section 05671.
6. 115 Pound RE Rail: Section 05690.
7. Timber Crossties and Switch Ties: Section 06135.

1.02 DEFINITIONS:

A. The use of the following terms in these Specifications shall be interpreted as specified herein:

1. Ballast - An integral part of the track structure, generally composed of graded crushed stone, in which ties are embedded.

2. Continuous Welded Rail (CWR) - A number of rails welded together into a continuous string.

3. Crossover, Single - Two turnouts, with track located between the frogs and arranged to form a continuous passage between two adjacent and generally parallel tracks.

4. Gauge, Track - The distance between the inside faces of running rails of a track measured at a point 5/8 inch below the top of rail.

5. Inside Rail - On curved track, the rail closest to the curve center; the rails with the shorter radius. Also referred to as the "low rail."

6. Joint Bar - Device used to join the abutting ends of contiguous rails of the same cross section.

7. Joint Bar, Compromise - A joint bar used to connect contiguous rails of different cross sections.

8. Joint Bar, Insulated - Joint bar used to arrest the flow of electric current between contiguous rails. Standard types are bonded and non-bonded.

9. Mate - A switch component having a fixed or immovable point and used on the opposite rail from a tongue switch as its companion piece.

10. Outside Rails - On curved track, the rail farthest from the curve center; the rail with the longer radius. Also referred to as the "high rail."

11. Premium Rail (High Strength Rail) - Rail having greater hardness than standard rail for use at locations of high track wear. Premium rail shall be fully heat-treated or head hardened.

12. Profile Grade Line (PGL) - The datum line which defines the vertical alignment of the track, applied at the top of the rails on tangent and the top of the inside (low) rail on curves.

13. Rail Anchor - A device which clamps to the base of a rail and bears against the side of a cross tie to restrain longitudinal movement of the rail.

14. Rail Fastening - A device used in track to secure running rails to cross ties or a track slab at the proper track gauge. It also provides proper vertical and lateral restraint of the rail, and some types also function as anchors providing proper longitudinal restraint of the rail.

15. Rail, Tee - The common class of steel rail design symmetrical about the vertical axis and which approximately resembles an inverted letter "T."

16. Running Rails - The rails of a track on which the tread of the rail vehicle wheels ride.

17. Screws, Tie Plate - A high strength threaded fastener component of ballasted track construction which fastens tie plates and special trackwork plates to timber cross ties and switch ties.

18. Spikes, Hair Pin Spring Type - Component of ballasted track construction which fastens rails and tie plates to timber cross ties.

19. Spiral - A curve of varying radius used to connect circular curves with tangents or contiguous circular curves of different radius for the purpose of reducing the sudden lateral force associated with a change in horizontal

direction.

20. Stock Rail - A running rail against which a switch rail operates in a turnout.

21. Sub-Ballast - A material superior in composition to the subgrade material which provides a semi-impervious layer between the track ballast and the subgrade to provide better drainage and distribution of loads to the subgrade.

22. Subgrade - The finished ground below the level of sub-ballast.

23. Superelevation - In curved track, the amount in inches that the outside rail is raised above the inside rail. The inside rail elevation is maintained at the PGL top of rail profile.

24. Switch, Point of - The tip of the tapered end of a switch point rail; the end of a switch rail farthest from the frog.

25. Switch Point Rail - The machined taper movable rail of a split switch.

26. Switch, Split - The common type of track switch consisting of two planed switch point rails.

27. Switch, Tongue - A switch consisting essentially of a movable point with a suitable enclosing and supporting body structure, designed for use on one rail while on the other rail is used either a mate or another tongue switch. Tongue switches are generally used when the turnout is located in embedded track.

28. Switch, Undercut - A switch in which the stock rails are undercut to mate with or nest the switch point rails so that the actual point of the switch rail head does not protrude beyond the original outline of the stock rail's head outline.

29. Top of Rail (T/R) - That portion of the running rail that follows the PGL.

30. Track, Ballasted - Track constructed of rails, crossties, tie plates, and rail fastenings set in ballast.

31. Track Foot - Unit of measurement for all types of track construction; measured along the centerline of track.

32. Track, Primary - A revenue service track designated by route name and direction.

33. Track Slab - The reinforced concrete foundation that supports the track, generally in conjunction with embedded track and shop track.

34. Trackway - The foundation on which the track structure is constructed.

35. Transition - A reinforced concrete slab located between ballasted track and direct fixation track, or embedded track to provide a transition between ballasted track construction and other types of track which have significantly higher track stiffness.

1.03 APPLICABLE STANDARDS:

A. Pertinent provisions of the following listed standards and publications shall apply to the Work, except as they may be modified herein, and are hereby made part of these Specifications to the extent required.

1. American Railway Engineering & Maintenance of Way Association (AREMA), Manual for Railway Engineering, latest edition, herein referred to as the AREMA Manual.

2. American Railway Engineering & Maintenance of Way Association (AREMA), Portfolio of Trackwork Plans, latest edition, herein referred to as the AREMA Portfolio.

1.04 QUALITY ASSURANCE:

Contractor shall perform all measures necessary to assure quality of the Work. This shall include source quality control and field quality control requirements specified in these Specifications.

1.05 SUBMITTALS:

A. Submittals shall be made to the Engineer in accordance with Section 01330, SUBMITTAL PROCEDURES, of this Specification.

B. Certificates of Compliance:

1. Contractor shall submit Certificates of Compliance as follows:

a. Codes and regulations of the jurisdictional authorities.

b. Codes and Standards:

1) AREMA Manual
2) AREMA Portfolio

PART 2: PRODUCTS

(NOT USED)

PART 3: EXECUTION

3.01 CONSTRUCTION EQUIPMENT:

A. The Contractor shall prepare a list of construction equipment to be used during the trackwork construction. The list shall be submitted for review thirty days before such equipment shall be used in the Work. Acceptance by the Engineer indicates general acceptability of the type of equipment for the work planned.

B. Track gauge, guard rail gauge, flangeway width, curve radii, rail sections and special trackwork components shall be in accordance with AREMA Manual and AREMA Portfolio, except as may be modified in these specifications.

C. Clearance for the Contractor's on-track equipment shall conform to AREMA criteria and COMAR. Exception to this will not be allowed unless agreed to by MTA. A complete description of any on-track equipment proposed for use by the Contractor shall be submitted. The submittal shall include a drawing showing the outline of the proposed equipment superimposed on a track cross section.

D. The Contractor's equipment shall not exceed Cooper E-80 loading. The Contractor shall verify that proposed equipment meets these requirements.

3.02 ALIGNMENT DATA:

A. Alignment information is shown on Track Alignment Schematic and Track Alignment Data sheets of the Contract Drawings and referenced to geometric control points for the track.

B. Engineering stationing is used to reference all geometric control points. Independent stationing is used for each separate track with the point of switch generally being the origin of the stationing.

3.03 TRACK GEOMETRY:

A. Track shall be installed to conform with the alignment and profile data as specified herein, and in conformance with the Contract Documents.

B. For tangent track, the alignment is to be based on each centerline of track, equidistant between the gauge sides of the running rails.

C. For curved track, the alignment is to be based on the centerline of track with the outside rail located 2 feet 4-1/4 inches radially from the centerline measured in the plane of the rails. D. Track gauge shall be measured as specified for Gauge, Track under Definitions:

1. Tangent ballasted primary track gauge shall be 4 feet 8-1/2 inches.

2. Track gauge shall be measured between points 5/8 inch below the top of, and from inside face to inside face of the running rails.

E. Rail Cant:

1. Ballasted track shall be constructed with rail cant at 40 to 1 inward inclination of the rails.

F. Superelevation: There is no superelevated track in this Contract.

G. Track Surface:

1. Definitions:

a. Track surface is the relationship of opposite rails to each other in profile and cross level.

b. Track profile is the running surface along the top of the grade rail. On curves, the grade rail is the inside rail.

c. Cross level is the difference in elevation of the tops of heads of opposite rails measured at right angles to the track alignment.

2. The ideal surface is a uniform profile consisting of straight gradients connected by vertical curves, with zero cross level on tangents and predetermined cross level on curves.

3.04 TRACK INSTALLATION TOLERANCES:

A. The track installation tolerances shall be as specified in Table 1 below. Track in this contract shall be considered ballasted industry track.

TABLE 1
TRACK INSTALLATION TOLERANCES

VERTICAL TRACK ALIGNMENT	HORIZONTAL TRACK ALIGNMENT

Type of Class of Track	Gauge Variation	Cross Level and Superelevation (Note 3)	Total Deviation (Note 2)	Middle Ordinate in 62' Chord (Note 4)	Total Deviation (Note 2)	Middle Ordinate in 62' Chord (Note 4)
Ballasted Primary	+1/8" -0"	+/-1/8" (Note 1)	+/-1/4"	+/-1/8"	+/-1/4"	+/-1/8"
Ballasted Industry	+1/4" -0"	+/-1/4"	+/-1/4"	+/-1/2"	+/-1/8"	+/-1/4"

NOTES:

1. Total deviation is measured between theoretical and actual alignments at any point in the track.
2. Rate of change variations from theoretical gauge, cross level and superelevation shall not exceed 1/8 inch per 31 feet of track.
3. Chord measurements may be taken at the mid-point between any two points 62 feet apart.

3.05 TYPES OF RAIL:

A. Rail for use as running rail will be 115 RE tee rail in accordance with Section 05690 of this Specification. All running rail in this Contract will be high strength rail.

B. Tee rail may have drilled or non-drilled blank ends, straight or precurved sections. Drilled rail ends will be furnished end hardened.

1. Straight tee rails will be nominally 39 foot and 78 foot lengths with some shorts. Shorts will not be less than 36 foot lengths.
2. All rail ends will be bevelled in accordance with AREMA recommended practice.
3. All rail must be saw-cut. No torch-cut rails will be permitted for this project.

C. The rail section and profile grade to be installed is noted on the Contract Drawings.

E. Fully heat treated and head hardened rail will be used in the following locations:

1. Fully heat treated or head hardened 115 RE rail (high strength rail) shall be installed in all curved track in primary track where the radius is less than 2000 feet and for 500 feet each side of station platforms, as indicated on the Contract Drawings.

2. Fully heat treated (F.H.T.) or head hardened (H.H.) rail shall extend 39' before point of switch and beyond heel of frogs to facilitate rail welding at special trackwork components.

3.06 TYPES OF CROSSTIES:

A. Ties for use in ballasted track shall be timber ties in accordance with Section 06135, TIMBER CROSS TIES AND SWITCH TIES, of this Specification except in special trackwork and where otherwise noted on the Contract Drawings.

B. The top and gauge side corner of the running rail head shall be ground. All rust, mill scale and surface irregularities shall be removed with successive passes of the rail grinder. The grinding wheel shall be not less than 10 inches in diameter and shall have controlled downward pressure to permit grinding more metal per pass at high spots and bridging at low spots less than 10 inches in length.

3.07 FINAL TRACK INSPECTION:

A. In order to determine the acceptability of the new primary trackage for line and grade the Contractor will perform a track survey making and recording measurements of track gauge, cross level and alignment at least once every 31 feet of track centerline length. The purpose of this survey will be to detect instances where the track geometry does not meet the tolerances outlined in these specifications. The survey results and a written narrative will be submitted to the Engineer with all deviations from proposed line and grade highlighted and the amount of deviation clearly marked. The Engineer will be the sole judge of acceptability of the as-built track geometry. Rail tie plates and ties shall be checked to ensure that the rail is properly seated and has full bearing on the tie plate and tie.

PART 4: MEASUREMENT AND PAYMENT

4.01 GENERAL REQUIREMENTS FOR TRACK INSTALLATION:

A. This work will not be measured for payment.

B. This work will not be paid for directly, but will be considered incidental to track installation.

END OF SECTION

THIS SPACE INTENTIONALLY LEFT BLANK

SECTION 05653

TRACK MATERIAL

PART 1: GENERAL

1.01 DESCRIPTION:

A. This Section specifies furnishing new track materials required for the completion of trackwork.

B. Materials shall be subject to in-plant inspection for conformance to material specifications prior to shipment.

C. Related work specified elsewhere:

1. Ballast: Section 02726.
2. Subballast: Section 02725.
3. 115 Pound RE Rail: Section 05690.
4. Joints and Joint Bars: Section 05665.
5. General Requirements For Track Installation: Section 05650.
6. Ballasted Track Installation: Section 05671.
7. Timber Crossties and Switch Ties: Section 06135.

1.02 QUALITY ASSURANCE:

A. The following codes, regulations, referenced standards and specifications apply to work included in this Section:

1. Codes and regulations of the jurisdictional authorities.
2. Applicable Standards:
   a. AREMA Manual
   b. AREMA Portfolio

1.03 SUBMITTALS:

A. Submittals shall include the following:

1. Shop drawings, material specifications and certified service records of Resilient Clip Track Fasteners shall be submitted to the Engineer within 30 calendar days of the Notice to Proceed.

2. Shop drawings and installation procedures for all track materials.

5. Submit Certificates of Compliance for all Contractor furnished track material.

B. Submittals shall be made in accordance with Section 01300 of this Specification.

PART 2: PRODUCTS

2.01 DIRECT FIXATION TRACK FASTENER SYSTEMS:

A. Resilient clip track fastener systems shall be one of the following, or approved equal:

1. Pandrol e-clip or Safelok systems

2. Vossloh DFF 300 system

3. Amsted RPS e-clip system, 2000 system, or 6030 Longreach system

B. Clamp Type track fastener systems shall be one of the following, or approved equal:

1. L. B. Foster No. 62

2. Midwest Steel No. K-26

C. All components of a track fastener system shall be of the same manufacturer and shall include clips or clamps, shoulders or lugs, tie pads, shims and all components necessary for the complete securing of the rails to the plinths or slabs in accordance with the manufacturer's recommendations.

2.02 CUT TRACK SPIKES

Cut track spikes shall be high carbon steel conforming to AREMA Chapter 5, Section 2.2. Dimensions of spikes shall be in conformance with AREMA Chapter 5, Section 2.3 for the 5/8 in. square and 6 in. long reinforced throat track spike. Cut track spikes shall be used if a positive rail restraint fastener system is not used. All cut track spikes used for fastening rail shall be new material. Second hand spikes are prohibited.

2.03 TIE PLATES

A. Tie plate minimum dimensions:

1. Crossties – 115RE Rail - 15 inches long by 7 ¾ inches wide, per AREMA Plan No. 20

2. Crossties – 85PR Rail - 10 inches long by 7 ½ inches wide, per AREMA Plan No. 1, Punching B.

B. The tie plate shall have a minimum of two 1 5/32" diameter hold-down holes on each end of the plate. Holes within 10 inches of each other that could cover the same grain line of the tie shall not be permitted. The minimum hole stagger at 10 inches or less shall be 2 inch.

C. Tie plates for crossties shall provide a rail cant of 1 to 40 toward the centerline of track and shall be a minimum of 5/8 inches thick in the rail seat area. Frog and switch tie plates shall have zero cant, and shall be a minimum of ¾ inches thick in the rail seat area.

D. Tie plates for crossties shall be one piece, complete with integral shoulders extending the full width of the plate, such as the Pandrol TPL-P60 plate, and appropriate provisions for attachment of rail clips. Tie plates for switch ties shall have Pandrol pressed steel weld-on shoulders welded onto the frog and switch plates as shown on the Contract Drawings.

E. Tie plates shall be manufactured in accordance with AREMA Manual Chapter 5, Part 1-Specifications for Low Carbon Steel Tie Plates, with respect to materials and workmanship.

F. Tie plates shall be free from warp and injurious projections in surface and projecting fins of metal caused by shearing and punching. Screw spike holes shall be free of burrs.

G. Each tie plate shall be clearly marked with the name or brand of the manufacturer and the last two digits of the year manufacture.

2.04 TRACK BOLTS AND NUTS:

Track bolts and nuts shall conform to AREMA Chapter 4, Section 2.9, and shall be used for temporary rail connections pending welding of the joint and for joining sections of inner guardrail on structures. Standard heat treated carbon steel track bolts and carbon steel nuts shall conform to the type and weight of track materials being used. All track bolts and nuts shall be new material.

2.05 SPRING WASHERS FOR TRACK BOLTS:

Track bolts and nuts shall conform to AREMA Chapter 4, Section 2.10, and shall be used for temporary rail connections pending welding of the joint and for joining sections of inner guardrail on structures. Spring washers of the appropriate size shall be used on each track bolt. All spring washers shall be new material.

2.06 RAIL ANCHORS:

Rail anchors shall conform to AREMA Chapter 5, Section 7.1. Rail anchors shall be used on the ballasted track, only. Rail anchors shall be spring type designed for the rail base width to which they are applied. Where used with second hand rail the anchors shall be sized to fit the rail base. Rail anchors for the 85PR rail need not be new but must be in good condition and certified by the supplier to be suitable for the track and rail traffic conditions in which they will be applied. Rail anchors applied to the 115RE rails in the ballasted track shall be new material.

2.07 RAIL JOINTS – BOLTED, STANDARD AND COMPROMISE:

A. Bolted standard and compromise joints shall be furnished in accordance with Section 05665, JOINTS AND JOINT BARS, of these Specifications.

2.08 TIE PLUGS AND COAL TAR CREOSOTE PRESERVATIVE:

A. Tie plugs shall be treated, 5 inches long and conform to AREMA "Specification for Tie Plugs".

B. Coal Tar Creosote Preservative shall be in accordance to AREMA Manual, Chapter 3, Part 7, "Specification for Preservatives" Grade C.

2.09 TIMBER CROSSTIES: In accordance with Section 06135.

PART 3: EXECUTION

3.01 INSTALLATION: The installation and testing of track material shall be in accordance with the appropriate installation specifications for each item.

PART 4: MEASUREMENT AND PAYMENT

4.01 GENERAL:

A. This work will not be measured or paid for directly, but will be considered incidental to Ballasted Track Installation.

END OF SECTION

THIS SPACE INTENTIONALLY LEFT BLANK

THIS SPACE INTENTIONALLY LEFT BLANK

SECTION 05665

JOINTS AND JOINT BARS

PART 1: GENERAL

1.01 DESCRIPTION:

A. This Section specifies furnishing, fabricating, delivering and installing of bolted joints, both standard and compromise.

B. Related work specified elsewhere:

1. General Requirements for Track Installation: Section 05650.
2. Track Material: Section 05653.
3. Ballasted Track Installation: Section 05671.
4. Ballasted Special Trackwork: Section 05681.
5. 115 Pound RE Rail: Section 05690.

1.02 QUALITY ASSURANCE:

A. The following codes, regulations, referenced standards and specifications apply to work included in this Section:

1. Codes and regulations of the jurisdictional authorities.

2. Applicable Standards

   a. AAR Manual.

   b. AREMA Manual for Railway Engineering.

   c. ASCE.

   d. ASTM: A490.

1.03 SUBMITTALS:

A. Submit the following:

1. Shop Drawings.

2. Procedures, including

a. Installation procedures.

b. Recommended bolt tensioning.

PART 2: PRODUCTS

2.01 MATERIALS:

A. Joint Bars

Joint bars shall conform to AREMA Chapter 4, Section 2.8, and shall be used for temporary rail connections pending welding of the joint and for joining sections of inner guardrail on structures. Joint bars shall be designed for the rail section that they are joining and shall be six hole types. Joint bars need not be new but in good condition with minimal wear.

A. Compromise Joints

Compromise joints shall conform to AREMA Chapter 4, Section 2.8. Compromise joints shall be used only when connecting rails installed as part of this project to existing rails if the existing and project rail sections are different. All compromise joints shall be new or first quality condition second-hand material.

PART 3: EXECUTION

3.01 GENERAL:

A. Joints and joint bars and compromise joints shall be installed in accordance with Section 05671 BALLASTED TRACK INSTALLATION.

PART 4: MEASUREMENT AND PAYMENT

4.01 JOINTS AND JOINT BARS:

A. Joints and Joint Bars or Compromise Joints will not be measured for payment.

B. Joints and Joint Bars and Compromise Joints will not be paid for directly, but will be included in the unit price bid for Ballasted Track Installation.

END OF SECTION

THIS SPACE INTENTIONALLY LEFT BLANK

THIS SPACE INTENTIONALLY LEFT BLANK

THIS SPACE INTENTIONALLY LEFT BLANK

THIS SPACE INTENTIONALLY LEFT BLANK

THIS SPACE INTENTIONALLY LEFT BLANK

THIS SPACE INTENTIONALLY LEFT BLANK

SECTION 05671

BALLASTED TRACK INSTALLATION

PART 1: GENERAL

1.01 DESCRIPTION:

A. This Section specifies the installation of ballasted track.

B. Ballasted track installation shall include:

1. Smoothing and compacting subballast material as required to repair any rutting or other disturbance and providing additional subballast material to compensate for deficiencies.

2. Placing and compacting ballast.

3. Placing and aligning timber ties.

4. Installing, aligning and clamping rail.

5. Installing bolted rail joints.

6. Tamping, gauging, lining and surfacing track.

7. Other operations as may be specified.

C. Geotextile Fabric shall be used in areas as directed by the Engineer to overcome subgrade conditions which are unsuitable due to wet or unstable conditions. Geotextile fabric shall not be used in lieu of subballast.

D. Related work specified elsewhere:

1. Ballast: Section 02726.
2. Subballast: Section 02725
3. General Requirements for Track Installation: Section 05650.
4. 115 Pound RE Rail: Section 05690.
5. Timber Crossties and Switch Ties: Section 06135.

1.02 APPLICABLE STANDARDS:

A. The following codes, regulations, reference standards and specifications apply to work included in this Section:

1. Codes and regulations of the jurisdictional authorities.

2. American Railway Engineering and Maintenance of Way Association, AREMA, Manual of Railway Engineering.

   a. Chapter 3, Part 7, Specification for Preservatives.

   b. Chapter 4, Part 2, Rail Drillings, Bar Punching, and Track Bolts.

   c. Chapter 5, Part 4, Specifications for Track Construction.

   d. Chapter 5, Part 6, Specifications and Plans for Track Tools.

   e. Chapter 27, Part 2, Specifications for On-Track Roadway Machines and Work Requirements.

   f. Chapter 10, Part 1, Section 11, Recommended Practices for Shipping, Handling, Application and Use of Concrete Ties.

1.03 SUBMITTALS:

A. Submittals to the Engineer shall be as specified below:

1. Construction equipment:

   a. The Contractor shall prepare a list of construction equipment to be used during the trackwork construction. The list shall be submitted to the Engineer for acceptance before such equipment shall be used in the Work. Acceptance indicates general acceptability of the type of equipment for work planned. The Contractor shall be responsible for the quality of the work performed.

2. Detailed descriptions of installation procedures required for the work specified in this Section.

3. Samples required for the work specified in this Section.

4. Test results required for the work specified in this Section.

5. Working Drawings showing the proposed method for temporary clamping of rail during installation.

6. Required rail temperature record forms for rail laying and rail fastening operations.

1.04 PRODUCT DELIVERY, STORAGE AND HANDLING:

A. Timber Crossties and Switch Ties: As specified in Section 06135.

B. Ballast: As specified in Section 02726.

C. Rail: As specified in Section 05690.

PART 2: PRODUCTS

2.01 SUBBALLAST AND BALLAST:

A. Furnish subballast to compensate for deficiences, where necessary in accordance with Section 02725, SUBBALLAST.

B. Furnish Ballast in accordance with Section 02726, BALLAST.

1.02 TIMBER CROSSTIES:

Furnish timber crossties in accordance with Section 06135 TIMBER COROSSTIES AND SWITCH TIES

1.03 115RE RAIL:

115RE rail will be furnished by MTA in accordance with Section 05690 115 POUND RE RAIL.

1.04 OTHER TRACK MATERIAL (OTM):

A. Furnish tie plates in accordance with section 05653 TRACK MATERIAL

B. Furnish cut track spikes in accordance with section 05653 TRACK MATERIAL

C. Furnish tie plugs in accordance with section 05653 TRACK MATERIAL

D. Furnish rail anchors in accordance with section 05653 TRACK MATERIAL

E. Furnish track bolts and nuts in accordance with section 05653 TRACK MATERIAL

F. Furnish spring washers for track bolts and nuts in accordance with section 05653 TRACK MATERIAL

G. Furnish joints, joint bars and compromise joints in accordance with section 05665 JOINTS AND JOINT BARS

PART 3: EXECUTION

3.01 PLACEMENT OF SUBBALLAST:

A. Install subballast to compensate for deficiencies, where necessary, in accordance with Section 02725, SUBBALLAST.

B. Trash and debris on the subgrade and subballast shall be removed prior to subballast, geotextile and ballast placement.

C. Subballast damaged by Contractor's operations shall be repaired by the Contractor at no additional cost to the Contract.

3.02 PLACEMENT OF INITIAL BALLAST:

A. An initial layer of ballast shall be uniformly distributed over the subballast and compacted before tie distribution.

1. Ballast shall not be distributed until the subballast has been completed and accepted.

2. Ballast shall be compacted over the entire ballast section.

3. The initial layer of ballast shall be limited to a total compacted depth that will establish the track surface at least 4 inches below final grade.

B. Each lift of ballast within the initial layer shall not be greater than 4 inches deep and shall be uniformly spread and compacted with not less than four passes by either a self-propelled, pneumatic-tired roller or vibratory compactor.

1. The self-propelled, pneumatic-tired roller shall have a gross weight of not less than nine tons, and the vibratory compactor shall have a weight of not less than 5,000 pounds and shall be capable of applying a dynamic load of not less than 18,000 pounds.

2. The minimum depth of ballast from the bottom of tie to the top of subballast shall be 10 inches for ballasted track.

3.03 PLACEMENT OF TIMBER CROSSTIES:

A. Except as modified herein, timber crossties shall be handled, transported and stored in accordance with the current AREMA standards.

1. Only accepted lifting devices shall be used which will not damage the tie.

2. Crossties and switch ties shall be transported in a horizontal position and braced to prevent any movement that could cause damage.

B. The Contractor shall transport the ties from the storage area to the job site, where the ties shall be distributed and properly spaced on the compacted initial layer of ballast. Timber crossties shall be located and spaced on 24-inch centers.

C. Timber crossties shall be placed with the wider heartwood face down.

D. Timber crossties which have been damaged in handling or are found to be otherwise defective, particularly in the tie plate bearing area, shall be rejected and replaced by the Contractor at its own expense.

E. Tie plate seats shall be cleaned to be free of all loose material prior to placement of tie plates.

F. All ties shall be lifted and supported during storage, transportation, and placing in such a manner as to prevent damage. Ties damaged as a result of improper handling by the Contractor will be rejected and removed and replaced by Contractor with undamaged ties at no additional cost to the Contract.

3.04 INSTALLATION OF JOINTED RAIL:

Rail shall be laid in accordance with the AREMA Manual, Chapter 5, Part 5, Section 5.1, Article 4 "Laying", and Article 5 "Completion of Work".

3.05 JOINTS – STANDARD BOLTED JOINTS AND COMPROMISE JOINTS:

A. Standard Bolted Joints shall be assembled with a full complement of bolts, nuts and spring washers. Before installing joint bars, clean rail surface to be covered by the bar and coat with a heavy-duty corrosion resisting oil or grease. Install bolts and nuts finger tight. Tension bolts to 20,000 to 30,000 pounds by use of a track wrench or power torque wrench, starting from the center bolts and working to the end bolts. Immediately before the completion and acceptance of work, re-tighten track bolts to a tension of 15,000 to 25,000 pounds.

B. Compromise Joints shall be installed in accordance to the manufacturer's written instructions and shall be assembled with a full complement of bolts, nuts and spring washers. Before installing compromise bars, clean rail surface to be

covered by the bar and coat with a heavy-duty corrosion resisting oil or grease. Install bolts and nuts finger tight. Tension bolts to 20,000 to 30,000 pounds by use of a track wrench or power torque wrench, starting from the center bolts and working to the end bolts. Immediately before the completion and acceptance of work, re-tighten track bolts to a tension of 15,000 to 25,000 pounds.

3.06 APPLICATION OF RAIL ANCHORS:

A. Rail anchors shall be applied using the proper anchor applicator tool, or a track machine equipped with anchor application heads.

B. Rail anchors shall be located as indicated in Chapter 5, Part 5, Figure 5-3, Diagram 1 of the AREMA Manual. Eight (8) rail anchors per rail shall be applied. Rail anchors shall be installed on the gage side of the rail against the same tie face on opposite rails. Rail anchors shall grip the base of the rail firmly and shall have full bearing against the face of the tie. Rail anchors shall not be moved by driving them along the rail.

3.07 SURFACING AND ALIGNING:

A. After the track has been installed, ballast shall be placed in the tie cribs and shoulders of the track structure to restrain movement of the ties due to temperature changes in the CWR. Ballast shall be unloaded in sufficient quantities which will form a high shoulder and will fill the tie cribs and provide an adequate amount of ballast for the initial track lift, plus a surplus as required to continue to hold the track in line after the initial track lift.

B. Track surfacing shall be by methods which will prevent undue bending of the rail, damage to ties, straining of the joints, and damaging or loosening the spring clip fastenings. The amount of track lift shall neither exceed four inches nor endanger the horizontal and vertical stability of the track. The track shall be raised so that a final lift shall not be less than one inch or more than three inches when bringing the track to the final surface. Procedures and equipment for surfacing, aligning and tamping the track shall be in accordance with AREMA recommended parctice.

C. After the track has been finally raised, lined and surfaced, to the lines and grades shown on the Contract Drawings, the rails shall be refastened within the specified zero thermal stress temperature range. Ties and fastening devices damaged during the surfacing operation shall be removed and replaced with new ties and fastening devices.

D. The existing track is to be surfaced to meet the repaired track profile as shown on the Contract Drawings. The Contractor shall verify the repaired track top of rail elevations as shown on the Drawings. Where elevations differ significantly from those shown on the Drawings, the Contractor shall report the difference to the Engineer. The Contractor shall provide a proper run-off of the track raise to meet

the existing track surface at a point to be determined by the Engineer. The run-off shall not exceed ½ inch in 31 feet.

E. Upon completion of the raising and aligning operations fill cribs and shoulders with ballast to within 1 inch below the base of rails and switch connecting rods. Do not touch or come within 1 inch of metallic portions of the track structure with ballast.

F. Surfacing shall be discontinued when the ambient temperature is higher than 85°F or the rail temperature exceeds 100°F.

G. Tamping shall be done with a squeeze-vibratory type power tamper. Control of the power tamper's tamping cycle shall ensure the maximum uniform compaction of ballasted track. Ballast shall be uniformly tamped under both sides of each tie, directly under each running rail for a distance of 15 inches on both sides of the rail. Tamping will not be permitted at the center of the tie but the cribs shall be filled with ballast. For each tie, tamping shall proceed simultaneously inside and outside both running rails on both sides of the tie. The total track length shall be mechanically tamped.

H. Ballast shoulders and cribs shall be compacted with a vibrator compactor. Continue compacting until the ballast is firmly interlocked and the surface is true and unyielding, displaying no deformation or movement under the compaction equipment. Catenary foundations, drainage lines, filter cloth, inlets and electrical conduit shall be protected from damage during tamping and compacting.

I. Final surfacing and aligning of the track shall be completed after the track has been initially surfaced and aligned, fastened, and joined together by specified method.

J. The final surface and alignment of track shall be within the ballasted primary track installation tolerances specified in Section 05650, GENERAL REQUIREMENTS, for TRACK INSTALLATION of these Specifications.

K. After the final surfacing and alignment of track has been completed, the ballast shall be dressed to conform to the ballast sections. Subballast outside the toe of slope of ballast that has been fouled or disturbed by the Contractor's operations shall be re-sloped to the proper cross sections.

PART 4: MEASUREMENT AND PAYMENT

4.01 BALLASTED TRACK INSTALLATION:

A. Ballasted Track Installation will be measured per track foot along the centerline of each track.

B. Ballasted Track Installation will be paid for at the contract unit price bid per track foot which will be full compensation for installing rail; installing crossties; furnishing and installing tie plates, tie plugs, track spikes, rail anchors, bolted standard joints, bolted compromise joints, and all other track materials; and all material, equipment, tools, labor and all work incidental to complete the item as specified.

END OF SECTION

THIS SPACE INTENTIONALLY LEFT BLANK

THIS SPACE INTENTIONALLY LEFT BLANK

THIS SPACE INTENTIONALLY LEFT BLANK

THIS SPACE INTENTIONALLY LEFT BLANK

THIS SPACE INTENTIONALLY LEFT BLANK

THIS SPACE INTENTIONALLY LEFT BLANK

THIS SPACE INTENTIONALLY LEFT BLANK

SECTION 05673

DIRECT-FIXATION TRACK INSTALLATION

PART 1: GENERAL

1.01 DESCRIPTION:

A. This Section specifies installation of direct-fixation track as indicated on the Contract Drawings.

B. No rail pads or elastomeric boots are required for direct-fixation track installations in this Contract.

C. The Contractor may submit an equal for any item or process specified herein so long as that item or process has been in service in the United States for a period of not less than five years without a recorded failure.

D. Related work specified elsewhere:

1. Plant Prestressed Structural Concrete: Section 03410.

2. Cast-in-Place Reinforced Concrete: Section 03300.

3. 115 Pound RE Rail: Section 05690.

1.02 QUALITY ASSURANCE:

A. General: Conform to AREMA Manual for Railway Engineering, latest edition, except as modified herein.

B. Applicable Standards:

1. American Railway Engineering and Maintenance of Way Association (AREMA), Manual for Railway Engineering, latest edition: AREMA Manual.

2. American Society for Testing and Materials (ASTM):

   a. A36 Structural Steel

   b. E10 Brinell Hardness of Metallic Materials

3. American Concrete Institute Specifications for Structural Concrete for Buildings, ACI 301.

1.03 SUBMITTALS:

A. All submittals shall be made in accordance with Section 01300, SUBMITTAL PROCEDURES, of this Specification.

B. Shop drawings for all components of the track construction system.

C. Shop drawings for fabricating, bending and placing concrete reinforcing steel.

D. Laboratory test reports or evaluation reports for concrete materials and concrete mix designs.

E. Certification of compliance for reinforcement, admixtures, joint systems, curing compounds, and other materials as may be requested by the Engineer.

PART 2: PRODUCTS

2.01 STRUCTURAL CONCRETE: Section 03300 and 03410.

2.02 RAIL SEAT PLATES:

Rail Seat plates shall be compatible with the fastening system furnished.

2.03 TRACK FASTENER SYSTEM:

A. Rail clips may be clamp type clips or elastic fasteners of the type used on concrete crossties. Lugs or shoulders compatible with the type of clip selected shall be cast into the plinths.

B. Direct fixation track fastener system shall be furnished in accordance with Section 05653, TRACK MATERIAL

2.04 RAIL:

Furnish in accordance with Section 05690, 115 POUND RE RAIL.

PART 3: EXECUTION

3.01 CAST-IN-PLACE CONCRETE PLINTH SYSTEM

A. Installation of the cast-in-place concrete plinth system shall be as shown on the Contract Drawings and in accordance with the following sections of this Specification:

1. Section 03050, PORTLAND CEMENT CONCRETE

2. Section 03210, REINFORCING STEEL

3. Section 03300, CAST-IN-PLACE REINFORCED CONCRETE

B. Lugs or shoulders compatible with the type of track fastener system selected shall be cast integrally into the plinths.

PART 4: MEASUREMENT AND PAYMENT

4.01 DIRECT-FIXATION TRACK INSTALLATION:

A. The item Direct Fixation Track Installation shall include furnishing and installing rail clips and bolts, rail seat plates, rail seat pads, shims, and installing 115 pound RE rail, all of which will not be measured for payment.

B. The item Direct Fixation Track Installation will be paid for at the lump sum bid price, which price shall be full compensation for all material, equipment, tools, labor and all work incidental to complete the item as specified.

4.02 FURNISHING RAIL:

A. Furnishing Rail will be measured in accordance with Section 05690, 115 POUND RE RAIL.

B. Furnishing Rail will be paid for in accordance with Section 05690, 115 POUND RE RAIL.

4.03 AGGREGATE BASE:

A. Aggregate Base will be measured in accordance with Section 02060, BASE COURSE USING GRADED AGGREGATE.

B. Aggregate Base will be paid for in accordance with Section 02060, BASE COURSE USING GRADED AGGREGATE.

4.04 CAST-IN-PLACE CONCRETE PLINTH SYSTEM:

A. Cast-In-Place Concrete Plinth System will be measured in accordance with Section 03300, CAST-IN-PLACE REINFORCED CONCRETE.

B. Cast-In-Place Concrete Plinth System will be paid for in accordance with Section 03300, CAST-IN-PLACE REINFORCED CONCRETE.

END OF SECTION

THIS SPACE INTENTIONALLY LEFT BLANK

SECTION 05690

115 POUND RE RAIL

PART 1: GENERAL

1.01 DESCRIPTION:

A. This Section specifies furnishing all labor, materials, and equipment for the manufacture, testing, fabricating and shipping of drilled, undrilled, precurved, standard and high strength 115 lb./yd. RE steel rail for installation.

B. Related work specified elsewhere:

1. General Requirements for Track Installation: Section 05650.

2. Ballasted Track Installation: Section 05671.

1.02 SUBMITTALS:

A. Submit the following:

1. Date schedule of rail production, inspection, shipment and final delivery.

2. A detailed description of the steel metallurgy.

3. A description of the method for precurving rail.

4. A detailed description of the methods and procedures to be used to remove hydrogen in the steel.

5. A description of the ultrasonic testing method and equipment.

6. A description of the method and verification testing to achieve the required rail hardness.

B. Submit the method of handling, shipping, unloading, and stacking rail for review and acceptance at least four weeks before shipping of the rail.

C. Provide Ultrasonic Inspector's qualification certification for the individuals actually conducting the testing at least 30 days before the commencement of the in-plant inspections.

D. Provide certified rail test report showing the test results for chemical composition, yield strength, tensile strength, elongation percentage, and testing date for each heat of rail. Test results shall be available for review during the in-plant inspection and formal submittal to the Administration upon shipment of the rail.

E. Provide rail test records, including macroetch results, hardness measurements, ultrasonic test records and all other required test documentation, for informal review during the in-plant inspection and for formal review when submitted to the Administration upon shipment of the rail.

F. In addition, to the preceding test results, submit the following information to the Engineer upon shipment of the rail:

1. Report of Chemical and Physical Examination of Rails.

2. Mill certificate of inspections and Brinell hardness readings.

3. Report of rail shipment by rail type and length.

G. Forward all submittals to the Engineer in accordance with Section 01300, SUBMITTAL PROCEDURES.

PART 2: PRODUCTS

2.01 RAIL:

A. General

1. Steel rail shall be 115 lb./yd. RE and conform to the 1996 requirements of the following sections of the American Railway Engineering and Maintenance of Way Association (AREMA) Manual for Railway Engineering, Chapter 4 "Rail". Part I - Design (Rail section design for 115 RE Rail) and Part 2 - Specifications (Specifications for Steel Rails). Including Supplementary Requirements S1 and S2 and Miscellaneous Part - Specifications for Fully Heat-Treated (FHT) or Head Hardened (HH) rail.

2. All rail shall be from continuous cast blooms and shall be identified by a designation for heat number, strand number and bloom number.

3. Classifications, markings and brandings shall conform to AREMA specifications.

4. Furnish both standard and high strength (FHT or HH) rail in standard 78 to 80 foot lengths. Up to 12% of the total tonage accepted from each shipment may be in shorter lengths as follows: 78, 76, 74, 70, 65 and 60 feet. Short rails shall be paint marked green. The lengths of the short rails shall be painted on the rail head approximately one foot from each end.

5. Allowable tolerances for rail lengths are +/- 7/8 inch for 78 and 80 foot rail lengths corrected to a rail temperature of 60°F.

6. Where holes are required, drill 3 holes at the ends as follows:

   a. Holes shall be 1-3/16 inch diameter and 2-7/8 inches above the base. Hole spacing, from end of rail successively to hole centers, shall be 3-1/2 inches, 6 inches, and 6 inches. Undrilled rail shall be welded by others in accordance with Section 05651, RAIL WELDING, of this Specification.

7. End harden all drilled rail ends to between 341 and 401 Brinell Hardness in accordance with AREMA's Supplementary Requirements S1.

8. All rail shall be finished without any end droop.

9. Ensure rail is ultrasonically tested over its full length. Test all rails 100% in-line with a fully computerized DAPCO 300 testing unit. Testing shall conform to the requirements of Chapter 4, Part 2, Section 8 of the AREMA Manual. A calibration test rail of the same section as being tested will be utilized with the following calibration reference standard:

   Head 3/32" wide by 2" long slot

   Web 1/16" wide x 2" long slot

   Base 1/16" deep x 2" long slot.

   a. The calibration rail shall be not less than 30 feet long. The rate of travel for the calibration rail shall be the same as the production rail and shall permit detection of the artificial defects.

   b. Defects may be removed by cropping the rail end segment containing the defect if the resulting rail length is the minimum allowable rail length of 60 feet. The reduced rail length will be included as part of the quantity of allowable 12% shorts.

10. As an alternative to the in-line ultrasonic testing requirements of paragraph 9 above, all rail may be manually ultrasonically tested for

internal defects in accordance with ASTM A578 and AREMA Manual Chapter 4, Part 2, Section S2, as modified herein. Manual ultrasonic testing of rail as an alternative to in-line computerized testing shall require prior approval by the Administration and written approval of the testing procedures.

a. References to "plate thickness" in ASTM A578 shall mean rail depth from head to base for measurements from the top of the rail head, or rail web width for measurements laterally through the rail web.

b. Replace "Acceptance Standards" in ASTM A578 by a defect in the occurrence of one of the following readings:

   1) Complete loss of back reflection.

   2) A reflection from a defect (i.e. not attributable to a reflecting surface of the rail exterior) greater than 5% of the back reflection.

c. A rail shall be rejected if a defect occurs more than 3 feet from either end of the rail.

d. Defects within 3 feet of the rail end may be removed by cropping the rail segment containing the defect if the resulting rail length is to an allowable rail length increment and equal to or greater than the minimum allowable rail length. The reduced rail length will be included as part of the quantity of allowable 12% shorts.

e. Conduct ultrasonic inspection for the full length of each rail with a 1 inch diameter, 45° probe from the top of the rail head, directed along the length of the rail, positioned such that the rail base generates the back reflection.

f. Conduct ultrasonic inspection within 12 inches of each rail end with the 1 inch diameter 45° probe, as in paragraph e., and also with a 1 inch diameter, 0^{0} probe from the top of the rail head, vertically, and through the rail web, laterally. The back reflection for the lateral measurement through the rail web is the web surface opposite the probe side.

g. Conduct ultrasonic inspection by qualified technicians. Provide qualification certification of each individual conducting ultrasonic inspection.

h. Permanently mark all indications on the rail head directly over the defect location with the percentage amplitude relative to the back reflection.

i. Have the manufacturer furnish all rail inspection results.

B. High Strength Rail (Heat Treated or Head Hardened Rail)

1. Classifications, markings and brandings shall conform to AREMA specifications as specified in 2.01 A. herein.

2. Paint a 2 inch orange band 3 feet from the end of the rail. High strength rails shall be marked with a metal plate permanently attached to the neutral axis, hot stamped, or in brand which gives the manufacturer and method of treatment, and shall be paint marked as follows:

   a. For head hardened rail paint an orange and a white stripe 3 feet from the end of the rail.

   b. For fully heat treated rail paint an orange band 3 feet from the end of the rail.

3. High alloy, high strength rail, such as UIC 860/O, Grade 1100A, will not be considered.

4. Fully Heat Treated Rail shall meet the requirements of AREMA Chapter 4, Miscellaneous Part - "Specifications for Heat-Treated Carbon Steel Rail as Produced by Bethlehem Steel Corporation", except that Brinell hardness shall be in the range of 341 to 388.

5. Head Hardened Rail

   a. Rail heat treated by head hardening shall conform to AREMA Manual Chapter 4, Part 2, except that the head hardening shall have a depth not less than 5/8 inch as measured vertically from the top of the head on centerline of rail. Effective hardness is considered for this requirement to have a Brinell hardness of minimum 341, as shown on Figure 05690-1.

   b. A hardness traverse pattern shall be made on a rail section cut a minimum of 6 inches from the rail end. The pattern shall conform to the requirements of AREMA Manual Chapter 4, Part 2.

   c. Monitoring and recording controls shall be used on all heat treating machines to assure proper and continuous heating and quenching of the rail. This equipment shall be capable of making a permanent record of the heat treating operation. Any rail involved in a machine malfunction or variation from normal heat treating operation, shall be scrapped. An identifiable record shall be kept of each rail heat treated.

6. Rail hardness shall conform to the requirements of AREMA Manual Chapter 4, Part 2, using the Brinell (ASTM E10) method.

7. Strength properties of the rail shall conform to the minimum criteria set in AREMA Manual Chapter 4, Part 2, Section 1.4.3.

8. Chemical properties of the rail shall conform to AREMA Manual Chapter 4, Part 2, Section 1.3, except as noted below:

   a. For head hardened rail the weight percentage of manganese shall be 0.70 to 1.10, and silicon shall be 0.10 to 1.00.

   b. For fully heat treated rail the weight percentage of silicon shall be 0.10 to 0.50

   c. Residual elements for all rail shall conform to the following requirements:

Constituent	Weight Percentage
Copper, % max.	0.35
Nickel, % max.	0.25
Molybdenum, % max.	0.030
Tin, % max.	0.030
Arsenic, % max.	0.020
Vanadium, % max.	0.010
Tungsten, % max.	0.010
Cobalt, % max.	0.010
Antimony, % max.	0.010
Aluminum, % max.	0.010
Titanium, % max	0.012
Lead, % max.	0.005
Columbium, % max.	0.005
Boron, % max.	0.001

      1) If an element is introduced deliberately for the purpose of enhancing the physical properties of the steel, such as titanium, the Administration shall be notified. The element shall not, in this case, be considered to be a residual element.

9. Surface classification exceptions to AREMA Manual, Chapter 4, shall be as follows:

   a. Hot Marks: Hot marks such as shearing, scales, pits, guide marks, and hot scratches will be classified as follows:

1) Any hot mark, except guide marks, which are less than 0.015 inches deep will be accepted.

2) Guide marks in the rail head which are neither deeper than 0.015 inches or wider than 0.062 inches will be accepted.

3) Rails or portions of rails containing hot marks deeper than 0.015 inches will not be accepted.

b. Longitudinal cold scratches (marks formed below 700F) shall be classified as follows:

1) Rails containing a cold scratch not longer than 36 inches and not deeper than 0.010 inches will be accepted.

2) Rails containing a scratch deeper than 0.010 inches deep will not be accepted.

c. Transverse cold scratches (marks formed below 700F) shall be classified as follows:

1) Rails containing a cold scratch not deeper than 0.010 inches will be accepted.

2) Rails containing a scratch deeper than 0.010 inches deep will not be accepted.

C. Hydrogen Content for High Strength Rail

1. Samples for the hydrogen determination of the molten steel shall be taken at the tundish to represent the first third and the last third of the pour of each heat. Both values are to be recorded and the higher value shall be used to determine conformance with the Specifications.

2. Rails shall be free from shatter cracks (hydrogen flaking).

3. When the liquid steel has a hydrogen content of not less than 1.5 ppm as indicated by LECO analysis, further treatment of the blooms or rails to remove hydrogen is not required.

4. When the liquid steel has a hydrogen content of more than 1.5 ppm but less than 2.5 ppm, the manufacturer has the option of either control cooling the blooms or control cooling the rails.

5. When the liquid steel has a hydrogen content of 2.5 ppm or more, the manufacturer shall control cool the rails.

D. Steel Microcleanliness for High Strength Rail

1. The manufacturer shall apply the best accepted practice throughout the manufacturing process to ensure that the rail meet the conditions of this Specification. The manufacturer shall take care that the rails produced contain the minimum detrimental non-metallic inclusions and the lowest possible residual stresses. The manufacturer shall submit to the Administration the methods used to measure these properties.

2. Metallurgical cleanliness of the rail steel shall be determined from samples taken from the finished rail section. One sample from each heat of rail shall be taken from the head of the rail as indicated in Paragraph 3. The clean steel evaluation results shall be included in the QA/QC record for each steel heat.

3. Samples for the clean steel evaluation assessment shall be cut from the rail head in the direction of rail rolling. Samples of 3/8" x 3/8" x 3/16" shall be cut at the surface of top of the rail head centerline as shown in Figure 05690-2.

4. All measurements shall be performed at 800 x magnification in 80 random image fields. The size of each field shall not be less than 4×10^4 sq. microns and all particles greater than 1 micron in size shall be counted. The total area scanned shall not be less than 3.2×10^6 sq. microns.

5. Each sample shall be permanently marked according to heat and rail represented, and retained with all other heat records for the rail. Samples shall be made available to the Administration upon request.

6. The rails from each heat shall conform to the following Microcleanliness limits.

   a. Mean Particle Size: The mean particle size shall not exceed 30 sq. microns.

   b. Total Area Fraction: The total sample area shall not contain more than 0.200% of inclusions.

7. If any specimen fails to meet this requirement, the rail from which the sample was taken shall be rejected. Two additional specimens shall be taken, one from the rail in front and one from the rail in back of the specimen rail in the rolling sequence. If any retest specimen fails, testing

shall be continued in the manner above until rail(s) which acceptable quality is produced.

E. Residual Stress Test for High Strength Rail

1. One rail from each random sample of 10 heats of high strength rail, or one rail minimum, shall be subjected to a residual stress test. One rail shall also be tested after each roll change or mechanical adjustment of the roller straightener. A sample 48 inches long shall be cut from the rail at a distance not less than 3 feet from the end of the rail. An 18 inch long slot shall be sawn along the neutral axis of the rail.

2. Devergence of the slot greater than 0.150 inches shall be cause for rejection of the rail and all rails produced since the previous satisfactory test. Subsequent testing of previous rails in the rolling or heat treatment sequence is permissible. Subsequent rail production shall not be accepted until an acceptable test result is obtained.

3. Lateral displacement shall be measured from a line from the centerline of the rail base to the centerline of the rail head. Values are to be recorded for QA/QC information only.

F. Precurving of Rail

1. Curve data is shown on the Contract Drawings for use in preparing precurving rail shop drawings. Prior to performing precurving submit shop drawings for acceptance to show compliance with the requirements below.

a. Rail used for curves having less than 500 foot radius for CWR shall be precurved. Precurved rail may be cropped at 36 foot lengths. All rail before precurving shall be straight.

b. Uniformly curve rail, such that the deviation of the interior mid-ordinate offset from the theoretical offset is within the tolerances for straight rail using the appropriate chord distance required by the straight rail specification.

c. Precurved rail shall be identified with painted identity numbering per accepted shop drawing code at end of each rail.

PART 3: EXECUTION

3.01 ACCEPTANCE:

A. To be accepted, the rails offered must fulfill all the requirements of these Specifications and a mill certificate shall be furnished containing the following data:

1. The identity of each rail in a charge by heat number, strand number and bloom number.

2. The identity of each equivalent sample by heat for high strength rail.

3. The dates of all phases of heat treatment for each charge.

4. A listing of the accepted and rejected rail in each charge.

B. The Engineer will have authority to reject any material, work in progress, or finished work that fails to meet the requirements of these Specifications, and will have authority to specify corrective work necessary to meet the requirements.

3.02 LOADING: Rails shall be handled carefully to avoid damage and shall be loaded in rail cars. Sufficient blocking and dunnage shall be used to prevent damage to rail during transit.

3.03. DELIVERY AND STORAGE:

A. Storage Facility at Rail Mill

1. Provide a storage area for the rail after fabrication and store the rail until delivery is required at the jobsite. At all times, load, unload and store rail so as to prevent kinks and twists which may cause damage to the rail.

2. At the manufacturer's storage facility, rail shall be stored head up on level skids with minimum 1" x 3" wood bearing strips between rail levels. No more than 13 rail layers shall be used. Rails shall be stacked so that rails in the succeeding layers are directly over the rail below. Rail bases shall not be overlapped. Rail lifting shall be performed with overhead cranes, preferably with magnets uniformly spread throughout the length of the rail.

B. Shipping and Handling

1. All rails shall be handled carefully to avoid damage and shall be loaded on rail cars or trucks head up with the branding on all rails facing in the same

direction. Rails of different markings, i.e. shorts, shall not be intermixed in loading, but shall be segregated.

2. Rails shall be loaded with head up with adequate wood strips between layers of rail to prevent damage in transit.

C. Storage at Project Site

1. Contractor shall prepare the site as required to provide adequate storage of the rail.

a. Storage area for rails shall be level, uniformly compacted, free from soft areas, and well drained.

b. Base supports and dunnage between rail layers shall be evenly disturbed along the entire rail length, with support at rail ends.

D. Stacking of Rail

1. Rail shall not be stacked more than 6 layers high.

2. Use rails of equal length for the entire stack. If this is not feasible, place shorter lengths on the top layers.

3. Align rails carefully in the stacks. Avoid overlap of rail bases.

4. Keep rail ends in reasonable vertical alignment to ensure avoidance of a leaning stack.

5. Dunnage shall be minimum 4 inch thickness timber to permit proper use of slings during loading and unloading operations.

E. Rail Protection at Storage Site

1. Rail shall be protected from the elements to prevent excessive corrosion during storage.

2. Each rail stack shall be completely covered with a minimum 10 oz./sq. ft. reinforced tarpaulin, completely secured to the rails to prevent loosening or theft of the covering.

PART 4: MEASUREMENT AND PAYMENT

4.01 FURNISH 115 RE HIGH STRENGTH RAIL:

A. Furnish 115 RE High Strength Rail will be measured per linear foot.

B. Furnish 115 RE High Strength Rail will be not be paid. The Administration will supply all 115 RE High Strength Rail for use on this project. Rail will be delivered to the project site.

4.02 INSTALLATION OF 115 RE HIGH STRENGTH RAIL:

A. Installation of 115 RE High Strength Rail will not be measured for payment.

B. Installation of 115 RE High Strength Rail will not be paid for directly but will be included in the unit price bid for Ballasted Track Installation For Direct Fixation Track Installation.

4.03 RAIL FASTENINGS:

A. Rail Fastenings will not be measured for payment.

B. Rail Fastenings will not be paid for directly but will be included in the unit price bid for Ballasted Track Installation or Direct Fixation Track Installation

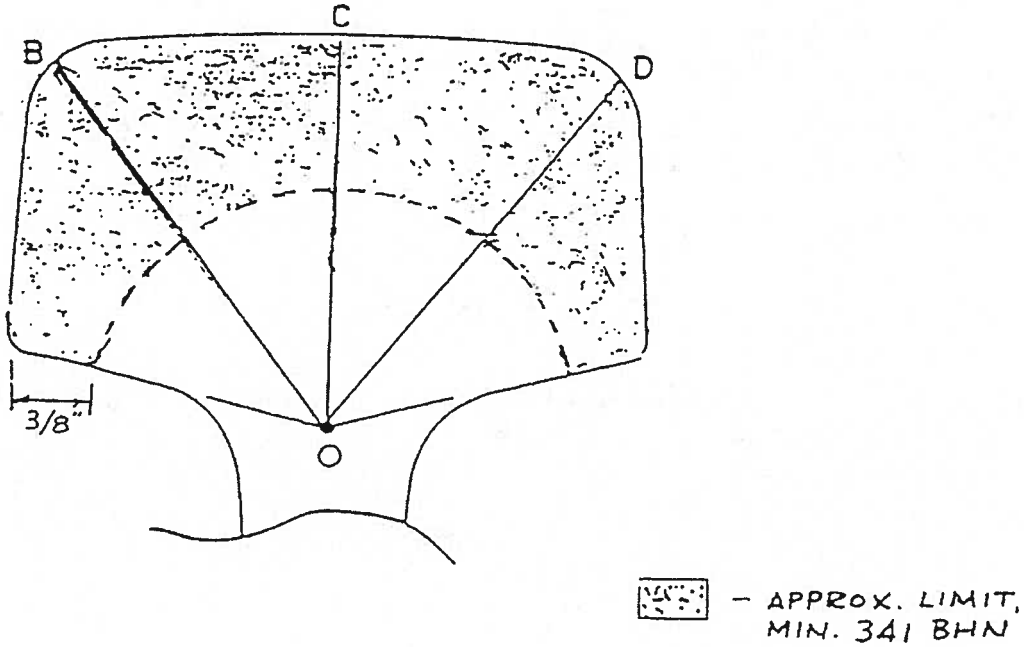

Hardness Patterns

CO	- 341 BHN Min at 5/8"
BO, DO	- 341 BHN Min at 7/8"

FIGURE 05690-1

HARDNESS TRAVERSE LINES FOR MEASUREMENT OF
HIGH STRENGTH RAIL HEAD HARDNESS

TYPICAL HARDNESS PATTERN (SHADED AREA) OF HEAD HARDENED RAIL

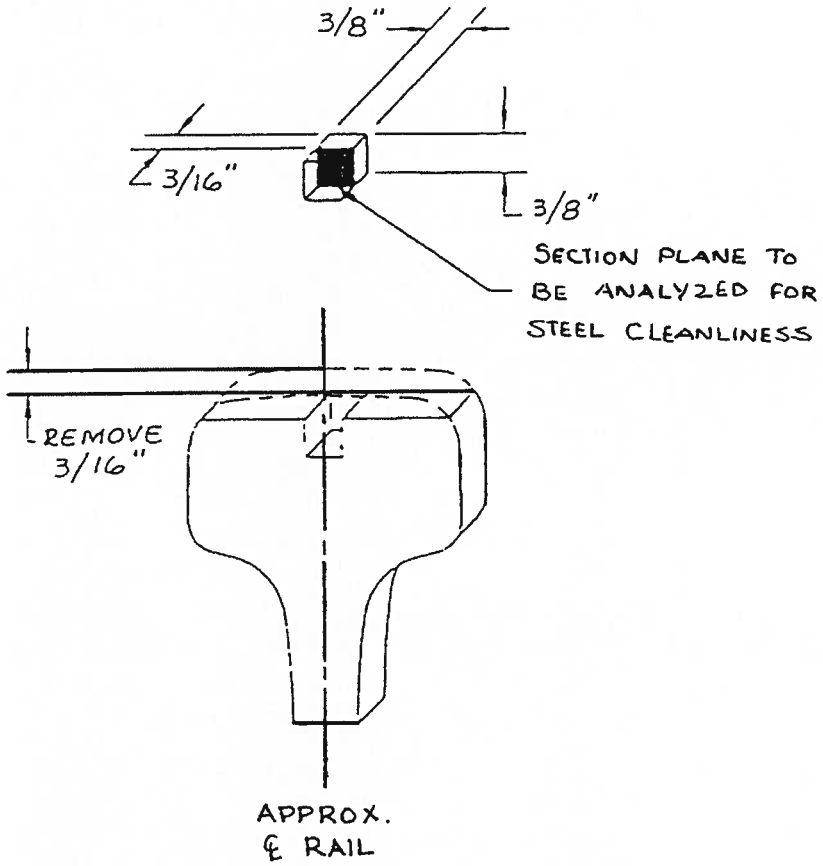

FIGURE 05690-2
RAIL CLEANLINESS SAMPLE

END OF SECTION

SECTION 06135

TIMBER CROSSTIES AND SWITCH TIES

PART 1: GENERAL

1.01 DESCRIPTION OF WORK:

A. This Section specifies the manufacture, treatment, inspection and shipment of new timber crossties.

B. Related work specified elsewhere:

1. General Requirements for Track Installation: Section 05650.

2. Track Material: Section 05653.

3. Ballasted Track Installation: Section 05671.

1.02 QUALITY ASSURANCE:

A. Provide certified test results or certificates of compliance for the requirements specified herein.

B. The following codes, regulations, referenced standards and specifications apply to work included in this Section:

1. Applicable standards:

a. AREMA Manual, Chapter 30

PART 2: PRODUCTS

2.01 WOOD SPECIES:

A. Crossties:

1. The following species of wood are acceptable for manufacturing crossties:

Ashes	Hickories
Beech	Locusts
Birches	Hard Maples
Cherries	Mulberries
Elms	Oaks

Gums	Sassafras
Hackberries	Walnuts

2. Minimum of 80% oak and a maximum of 20% mixed hardwoods will be accepted.

2.02 INSPECTION:

A. Cross and switch ties may be inspected at the source and locations must be designated on the purchase orders.

B. Inspectors will make a close examination of the top, bottom, sides and ends of each tie. Each tie will be judged independently, without regard for the decisions on other ties in the same job.

2.03 GENERAL QUALITY:

A. All ties shall be free from any defects that may impair their strength or durability such as decay, large splits, large shakes, slanting grain, or large or numerous holes or knots.

1. Decay: Decay is the disintegration of the wood substance due to the action of wood destroying fungi. "Blue stain" is not decay and is permissible in any wood.

2. Holes: A large hole is more than 2 inch in diameter and 3 inches deep within, or more than one-fourth the width of the surface on which it appears. Numerous holes are any number equaling a large hole in damaging effect. Such holes are not permitted.

3. Knots: Within the rail bearing areas, a large knot is one having an average diameter more than 1/3 the width of the surface on which it appears; but such a knot will be allowed if it is located outside the rail bearing areas. Numerous knots are any number equaling a large knot in damaging effect. Such knots are not permitted.

4. Shake:

   a. A shake is a separation along the grain, most of which occurs between the rings of annual growth.

   b. The length of a shake cannot exceed 1/3 the width of the tie and cannot be nearer than 1" to any surface.

5. Split: A split is a separation of the wood extending from one surface to an opposite or adjacent surface. In unseasoned cross ties, a split no more than 1/8 inch wide and/or 4 inches long is acceptable. End splits and shrinkage cracks that do not impair the fastening or strength of the material will be permitted.

6. Cross Grain: Tie with excessive cross grain are not permitted.

B. Members shall be straight grained. Members are to be cut without heart center or sapwood. Small drying cracks or splits are permitted.

C. Dimensions

1. Crossties: 7 inches deep, 9 inches wide, 8 feet 6 inches long.

2. Dimensional Tolerances:

a. Depth and Width: Plus 2 inch, minus 1/4 inch.

b. Length: Plus 1 inch, minus zero.

c. Wane or included bark will be rejected.

d. Sizing: Dimensions shall not be averaged.

2.04 MANUFACTURER:

A. Except as hereinafter provided, all ties shall be straight sawed top, bottom and sides, cut square at the ends, have bottom and top parallel, and have bark entirely removed.

B. Straightness

1. A tie will be considered straight when both of the following are achieved:

a. A straight line along the top from middle of one end to the middle of the other end is more than 3 inches from the closer side of the tie.

b. When a straight line along a side from the middle of one end to the middle of the other end is everywhere more than 2 inches from the top and bottom of the tie.

2. The top and bottom of a tie will be considered parallel if any difference in the thickness at the sides or ends does not exceed 1/8 inch.

C. Anti-Splitting Devices - Nail plates in accordance with AREMA, Chapter 3, Part 1, Article 6.2.3, minimum size 5-1/2 inches x 7 inches.

D. Treatment shall be in accordance with AREMA Chapter 3, Part 6, following ASTM D1760, Table 6; AREMA Chapter 3, Part 7, Section 1 ACreosote Solutions≅; and AREMA Chapter 3, Part 9.

PART 3: EXECUTION

3.01 MACHINING CROSS TIES:

A. Adzing (Dapping)

1. Adzing will only be performed for the placement of equipment (switch gear, etc.).

B. Boring

1. Boring for fastener holes shall conform in size and location to plans for the rail fasteners with plus or minus 1/16 inch permitted in each distance between holes. The spike holes shall be centered across the width of the tie in such a way that the fasteners will center on the tie when they are driven into the prebored holes. A tolerance of 1/8 inch in the centering of the holes across the width of the tie is permissible.

2. Fastener holes shall be bored no deeper than the length of the fastener.

3. When the head diameter of the drill bits has been reduced 1/16 inch by wear, bits shall be replaced. Cutting heads of bits shall be sharpened at regular intervals to insure clean boring.

4. Where possible pre-bore all holes at the time of manufacture.

C. Trimming

1. Trimmed ties shall be cleanly sawed at both ends to the specified length as they pass through the boring and adzing machine.

2. Machines shall be preferably equipped with devices for centering the ties length wise and where machines are so equipped equalizers and guides shall be so set that an equal amount is cut from each end of the tie. When machines are not equipped with equalizers, guides shall be set to trim 2

inch from one (line) end of the tie and sufficient from the opposite end to result in the specified length.

D. Branding

1. Branding of ends or the top or bottom surfaces of the ties as they are machined shall be done with letters, figures or symbols to indicate one or more of the following:
   - Year
   - Identity of plant
   - Identity of Owner (i.e., MTA)

2. The height of letters and figures shall be 3 inches. Dies used for branding shall have cutting edges 1/8 inches wide which shall indent the wood at least 1/4 inch deep.

3.02 INSPECTION AND DELIVERY:

A. Advise the Engineer when timber is ready for shipment to the work sites and do not ship any material until the Engineer has cleared the material for shipment. Brand each treated tie for quality control as specified herein, indicating compliance with these Specifications.

B. The Engineer will inspect ties prior to shipment to the work site. Contractor shall turn over each tie while the Engineer makes a reasonably close inspection of the top, bottom, sides and ends. Each tie will be judged independently without regard for the decisions on others in the same lot. Ties too muddied for ready examination will be rejected. Ties which have stood on their ends on the ground will be rejected.

C. Shipment: Ties shall be securely bundled, with all ties in a bundle having the same length. Switch ties shall be bundled in approximately matching lengths.

PART 4: MEASUREMENT AND PAYMENT

4.01 TIMBER CROSSTIES:

A. Timber Cross Ties will not be measured for payment

B. Timber Cross Ties will not be paid for directly, but will be incidental to the unit price bid for Ballasted Track Installation.

END OF SECTION

MARYLAND DEPARTMENT OF TRANSPORTATION

MARYLAND TRANSIT ADMINISTRATION

TRACK AND STRUCTURAL ENGINEERING DIVISION

CENTREVILLE FREIGHT RAIL LINE PERMANENT REPAIRS

CONTRACT NO. T-0590-3140

3 ADDENDUM NO. 3 SHEET NUMBERS 1 (TITLE SHEET), 2, 33A, 33B, 34, 35, 36
10/30/13

ADA DESIGN CERTIFICATION

"I HEREBY CERTIFY THAT THIS PLAN HAS BEEN DESIGNED IN ACCORDANCE WITH THE REQUIREMENTS OF THE AMERICANS WITH DISABILITIES ACT (ADA).

9/20/2013
DATE

DESIGNER'S SIGNATURE

MD. REGISTRATION NO. 13488
(P.E.) R.L.S. OR R.L.A. (CIRCLE)

JOSEPH S. MAKAR, P.E.
PRINTED NAME

DESIGN CERTIFICATION

"I HEREBY CERTIFY THAT THIS PLAN HAS BEEN DESIGNED IN ACCORDANCE WITH THE 2011 STANDARDS AND SPECIFICATIONS FOR SOIL EROSION AND SEDIMENT CONTROL OR CURRENT REVISIONS THEREOF, AND DEPARTMENT OF THE ENVIRONMENT STORM WATER MANAGEMENT REGULATIONS."

9/20/2013
DATE

DESIGNER'S SIGNATURE

MD. REGISTRATION NO. 13488
(P.E.) R.L.S. OR R.L.A. (CIRCLE)

JOSEPH S. MAKAR, P.E.
PRINTED NAME

OWNERS / DEVELOPER CERTIFICATION

"I/WE HEREBY CERTIFY THAT ALL CLEARING, CONSTRUCTION AND/OR DEVELOPMENT WILL BE DONE PURSUANT TO THIS PLAN AND THAT ANY RESPONSIBLE PERSONNEL INVOLVED IN THE CONSTRUCTION PROJECT WILL HAVE A CERTIFICATE OF ATTENDANCE AT A MARYLAND DEPARTMENT OF THE ENVIRONMENT APPROVED TRAINING PROGRAM FOR THE CONTROL OF SEDIMENT AND EROSION BEFORE BEGINNING THE PROJECT. I HEREBY AUTHORIZE THE RIGHT OF ENTRY FOR PERIODIC ON-SITE EVALUATION BY STATE OF MARYLAND, DEPARTMENT OF THE ENVIRONMENT, COMPLIANCE INSPECTORS."

10/07/13
DATE

OWNER/DEVELOPER SIGNATURES

43667
CARD NO:

ROBERT L. BURRIS
ASSISTANT MANAGER, FACILITIES ENGINEERING, ADA AND SUSTAINABILITY

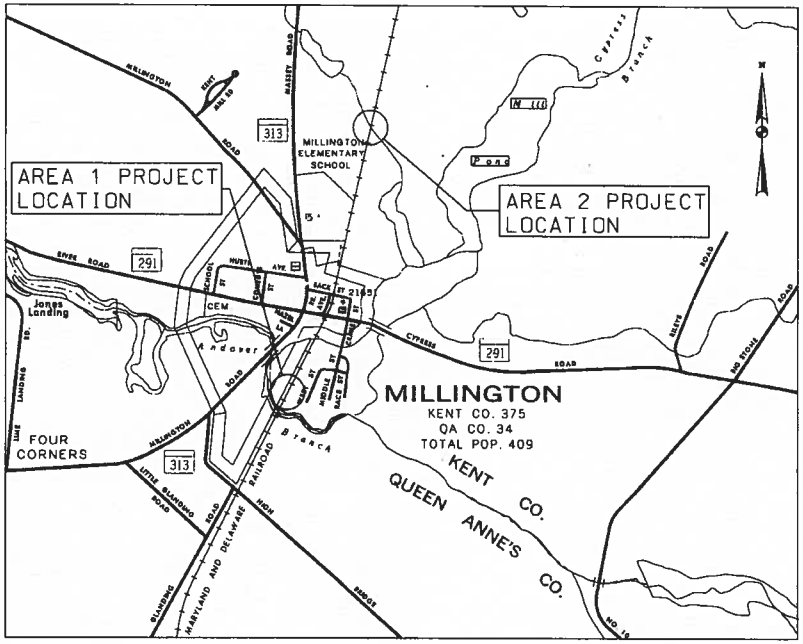

SCALE: 1" = 1000'

LOCATION: KENT COUNTY

VICINITY MAP

1000' 500' 0 1000' 2000'
GRAPHIC SCALE

ENVIRONMENTAL INFORMATION

MDE 13-SF-0253

SEDIMENT AND EROSION CONTROL REGULATIONS WILL BE STRICTLY ENFORCED DURING CONSTRUCTION.

STANDARD STABILIZATION NOTE:
FOLLOWING INITIAL SOIL DISTURBANCE OR RE-DISTURBANCE, PERMANENT OR TEMPORARY STABILIZATION MUST BE COMPLETED WITHIN:

A) THREE (3) CALENDAR DAYS AS TO THE SURFACE OF ALL PERIMETER DIKES, SWALES, DITCHES, PERIMETER SLOPES AND ALL SLOPES STEEPER THAN 3 HORIZONTAL TO 1 VERTICAL (3:1); AND

B) SEVEN (7) CALENDAR DAYS AS TO ALL OTHER DISTURBED OR GRADED AREAS ON THE PROJECT SITE NOT UNDER ACTIVE GRADING.

MARYLAND TRANSIT ADMINISTRATION

DATE: Oct 7, 2013 APPROVED:

WANE-JANG LIN, P.E.
TRACK AND STRUCTURAL PRESERVATION ENGINEERING

Gannett Fleming
WR&A
WHITMAN, REQUARDT & ASSOCIATES, LLP

CONTRACT NO.	T-0590-3140
DRAWING NO.	G-01
SHEET NO.	1 OF 38

GENERAL DRAWINGS

1	G-01	TITLE SHEET
2	G-02	INDEX OF DRAWINGS
3	G-03	CIVIL ABBREVIATIONS, SYMBOLS & NOTES
4	G-04	GENERAL NOTES AND ADA SUMMARY

STRUCTURAL DRAWINGS

5	S-01	MP 13.21 - AREA 1 DOWNSTREAM ENDWALL PLAN & ELEVATION
6	S-02	MP 13.21 - AREA 1 DOWNSTREAM ENDWALL TYPICAL SECTIONS & DETAILS
7	S-03	MP 13.21 - AREA 1 UPSTREAM ENDWALL PLAN & ELEVATION
8	S-04	MP 13.21 - AREA 1 UPSTREAM ENDWALL TYPICAL SECTIONS & DETAILS
9	S-05	MP 12.33 - AREA 2 GENERAL PLAN AND ELEVATION
10	S-06	MP 12.33 - AREA 2 DEMOLITION PLAN
11	S-07	MP 12.33 - AREA 2 GEOMETRIC AND FOOTING LAYOUT/ PILE DRIVING DATA
12	S-08	MP 12.33 - AREA 2 ABUTMENT A PLAN, ELEVATION AND SECTION
13	S-09	MP 12.33 - AREA 2 ABUTMENT B PLAN, ELEVATION AND SECTION
14	S-10	MP 12.33 - AREA 2 ABUTMENT A REINFORCEMENT DETAILS
15	S-11	MP 12.33 - AREA 2 ABUTMENT B REINFORCEMENT DETAILS
16	S-12	MP 12.33 - AREA 2 ABUTMENT A FOOTING REINFORCEMENT PLANS
17	S-13	MP 12.33 - AREA 2 ABUTMENT B FOOTING REINFORCEMENT PLANS
18	S-14	MP 12.33 - AREA 2 WINGWALL ELEVATIONS AND TYPICAL SECTIONS
19	S-15	MP 12.33 - AREA 2 TYPICAL SECTION
20	S-16	MP 12.33 - AREA 2 FRAMING PLAN
21	S-17	MP 12.33 - AREA 2 SLAB BEAM DETAILS (SLABS 1 AND 9)
22	S-18	MP 12.33 - AREA 2 SLAB BEAM DETAILS (SLABS 2 - 8)
23	S-19	MP 12.33 - AREA 2 SUPERSTRUCTURE DETAILS - 1
24	S-20	MP 12.33 - AREA 2 SUPERSTRUCTURE DETAILS - 2
25	S-21	MP 12.33 - AREA 2 MISCELLANEOUS DETAILS
26	S-22	MP 12.33 - AREA 2 RAILING DETAILS
27	S-23	MP 12.33 - AREA 2 FINISHED BRIDGE ELEVATIONS
28	S-24	MP 12.33 - AREA 2 STRUCTURAL STANDARDS - 1
29	S-25	MP 12.33 - AREA 2 STRUCTURAL STANDARDS - 2
30	S-26	MP 12.33 - AREA 2 STRUCTURAL STANDARDS - 3
31	S-27	MP 12.33 - AREA 2 STRUCTURAL STANDARDS - 4
32	S-28	MP 12.33 - AREA 2 STRUCTURAL STANDARDS - 5

EROSION AND SEDIMENT CONTROL DRAWINGS

33	ES-01	EROSION AND SEDIMENT CONTROL NOTES
33A	ES-02	EROSION AND SEDIMENT CONTROL NOTES
33B	ES-03	EROSION AND SEDIMENT CONTROL NOTES
34	ES-02	EROSION AND SEDIMENT CONTROL DETAILS
35	ES-03	MP 13.21 - AREA 1 EROSION AND SEDIMENT CONTROL / MAINTENANCE OF STREAM FLOW
36	ES-04	MP 12.33 - AREA 2 EROSION AND SEDIMENT CONTROL / MAINTENANCE OF STREAM FLOW

SOIL BORING DRAWINGS

37	SB-01	MP 12.33 - AREA 2 SOIL BORING PLAN
38	SB-02	MP 12.33 - AREA 2 SOIL BORING LOGS

MARYLAND DEPARTMENT OF TRANSPORTATION
MARYLAND TRANSIT ADMINISTRATION
MTA Maryland

Gannett Fleming
WR&A
WHITMAN, REQUARDT & ASSOCIATES, LLP
For Rough Creek Road, Baltimore, Maryland map

RJN ENGINEERING, INC.
CONSULTING ENGINEERS
ELLICOTT CITY, MARYLAND

PROFESSIONAL CERTIFICATION
I hereby certify that these documents were prepared or approved by me, and that I am a duly licensed professional engineer under the laws of the State of Maryland
13488 License No. 8/14/13 Expiration Date

NO.	DESCRIPTION	BY	DATE
1	REVISED SHEETS	MWA	10/30/13

REVISIONS

DESIGN M.W.A.
DRAWN M.W.A.
CHECK J.D.C.
APPR

CENTREVILLE FREIGHT RAIL LINE
PERMANENT REPAIRS

INDEX OF DRAWINGS

DATE: JULY 2013 SCALE: AS SHOWN

CONTRACT NO. T-0590-3140
DRAWING NO. G-02
SHEET NO. 2 OF 38

pw:\\00 - Current Projects\0590 - Freight Rail Capital Improvement Fund\04 Project Engineering\Track & Structural Preservation\Centerville Line Permanent Repairs\Cadd Files\Plan Sheets\CFLRpc00001.dgn
10/30/2013

B-4 STANDARDS AND SPECIFICATIONS

FOR

VEGETATIVE STABILIZATION

Definition

Using vegetation as cover to protect exposed soil from erosion.

Purpose

To promote the establishment of vegetation on exposed soil.

Conditions Where Practice Applies

On all disturbed areas not stabilized by other methods. This specification is divided into sections on incremental stabilization; soil preparation, soil amendments and topsoiling; seeding and mulching; temporary stabilization; and permanent stabilization.

Effects on Water Quality and Quantity

Stabilization practices are used to promote the establishment of vegetation on exposed soil. When soil is stabilized with vegetation, the soil is less likely to erode and more likely to allow infiltration of rainfall, thereby reducing sediment loads and runoff to downstream areas.

Planting vegetation in disturbed areas will have an effect on the water budget, especially on volumes and rates of runoff, infiltration, evaporation, transpiration, percolation, and groundwater recharge. Over time, vegetation will increase organic matter content and improve the water holding capacity of the soil and subsequent plant growth.

Vegetation will help reduce the movement of sediment, nutrients, and other chemicals carried by runoff to receiving waters. Plants will also help protect groundwater supplies by assimilating those substances present within the root zone.

Sediment control practices must remain in place during grading, seedbed preparation, seeding, mulching, and vegetative establishment.

Adequate Vegetative Establishment

Inspect seeded areas for vegetative establishment and make necessary repairs, replacements, and reseedings within the planting season.

1. Adequate vegetative stabilization requires 95 percent groundcover.
2. If an area has less than 40 percent groundcover, restabilize following the original recommendations for lime, fertilizer, seedbed preparation, and seeding.
3. If an area has between 40 and 94 percent groundcover, over-seed and fertilize using half of the rates originally specified.
4. Maintenance fertilizer rates for permanent seeding are shown in Table B.6.

B-4-1 STANDARDS AND SPECIFICATIONS

FOR

INCREMENTAL STABILIZATION

Definition

Establishment of vegetative cover on cut and fill slopes.

Purpose

To provide timely vegetative cover on cut and fill slopes as work progresses.

Conditions Where Practice Applies

Any cut or fill slope greater than 15 feet in height. This practice also applies to stockpiles.

Criteria

A. Incremental Stabilization - Cut Slopes

1. Excavate and stabilize cut slopes in increments not to exceed 15 feet in height. Prepare seedbed and apply seed and mulch on all cut slopes as the work progresses.
2. Construction sequence example (Refer to Figure B.1):
   a. Construct and stabilize all temporary swales or dikes that will be used to convey runoff around the excavation.
   b. Perform Phase 1 excavation, prepare seedbed, and stabilize.
   c. Perform Phase 2 excavation, prepare seedbed, and stabilize. Overseed Phase 1 areas as necessary.
   d. Perform final phase excavation, prepare seedbed, and stabilize. Overseed previously seeded areas as necessary.

Note: Once excavation has begun the operation should be continuous from grubbing through the completion of grading and placement of topsoil (if required) and permanent seed and mulch. Any interruptions in the operation or completing the operation out of the seeding season will necessitate the application of temporary stabilization.

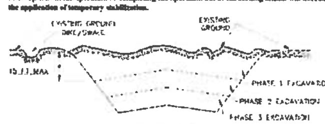

Figure B.1: Incremental Stabilization – Cut

B. Incremental Stabilization - Fill Slopes

1. Construct and stabilize fill slopes in increments not to exceed 15 feet in height. Prepare seedbed and apply seed and mulch on all slopes as the work progresses.
2. Stabilize slopes immediately when the vertical height of a lift reaches 15 feet, or when the grading operation ceases as prescribed in the plans.
3. At the end of each day, install temporary water conveyance practice(s), as necessary, to intercept surface runoff and convey it down the slope in a non-erosive manner.
4. Construction sequence example (Refer to Figure B.2):
   a. Construct and stabilize all temporary swales or dikes that will be used to divert runoff around the fill. Construct silt fence on low side of fill unless other methods shown on the plans address this area.
   b. At the end of each day, install temporary water conveyance practice(s), as necessary, to intercept surface runoff and convey it down the slope in a non-erosive manner.
   c. Place Phase 1 fill, prepare seedbed, and stabilize.
   d. Place Phase 2 fill, prepare seedbed, and stabilize.
   e. Place final phase fill, prepare seedbed, and stabilize. Overseed previously seeded areas as necessary.

Note: Once the placement of fill has begun the operation should be continuous from grubbing through the completion of grading and placement of topsoil (if required) and permanent seed and mulch. Any interruptions in the operation or completing the operation out of the seeding season will necessitate the application of temporary stabilization.

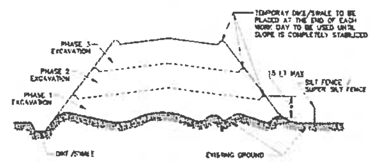

Figure B.2: Incremental Stabilization – Fill

B-4-2 STANDARDS AND SPECIFICATIONS

FOR

SOIL PREPARATION, TOPSOILING, AND SOIL AMENDMENTS

Definition

The process of preparing the soils to sustain adequate vegetative stabilization.

Purpose

To provide a suitable soil medium for vegetative growth.

Conditions Where Practice Applies

Where vegetative stabilization is to be established.

Criteria

A. Soil Preparation

1. Temporary Stabilization
   a. Seedbed preparation consists of loosening soil to a depth of 3 to 5 inches by means of suitable agricultural or construction equipment, such as disc harrows or chisel plows or rippers mounted on construction equipment. After the soil is loosened, it must not be rolled or dragged smooth but left in the roughened condition. Slopes 3:1 or flatter are to be tracked with ridges running parallel to the contour of the slope.
   b. Apply fertilizer and lime as prescribed on the plans.
   c. Incorporate lime and fertilizer into the top 3 to 5 inches of soil by disking or other suitable means.
2. Permanent Stabilization
   a. A soil test is required for any earth disturbance of 5 acres or more. The minimum soil conditions required for permanent vegetative establishment are:
      i. Soil pH between 6.0 and 7.0.
      ii. Soluble salts less than 500 parts per million (ppm).
      iii. Soil contains less than 40 percent clay but enough fine grained material (greater than 30 percent silt plus clay) to provide the capacity to hold a moderate amount of moisture. An exception: if lovegrass will be planted, then a sandy soil (less than 30 percent silt plus clay) would be acceptable.
      iv. Soil contains 1.5 percent minimum organic matter by weight.
      v. Soil contains sufficient pore space to permit adequate root penetration.
   b. Application of amendments or topsoil is required if on-site soils do not meet the above conditions.
   c. Graded areas must be maintained in a true and even grade as specified on the approved plan, then scarified or otherwise loosened to a depth of 3 to 5 inches.

   d. Apply soil amendments as specified on the approved plan or as indicated by the results of a soil test.
   e. Mix soil amendments into the top 3 to 5 inches of soil by disking or other suitable means. Rake lawn areas to smooth the surface, remove large objects like stones and branches, and ready the area for seed application. Loosen surface soil by dragging with a heavy chain or other equipment to roughen the surface where site conditions will not permit normal seedbed preparation. Track slopes 3:1 or flatter with tracked equipment leaving the soil in an irregular condition with ridges running parallel to the contour of the slope. Leave the top 1 to 3 inches of soil loose and friable. Seedbed loosening may be unnecessary on newly disturbed areas.

B. Topsoiling

1. Topsoil is placed over prepared subsoil prior to establishment of permanent vegetation. The purpose is to provide a suitable soil medium for vegetative growth. Soils of concern have low moisture content, low nutrient levels, low pH, materials toxic to plants, and/or unacceptable soil gradation.
2. Topsoil salvaged from an existing site may be used provided it meets the standards as set forth in these specifications. Typically, the depth of topsoil to be salvaged for a given soil type can be found in the representative soil profile section in the Soil Survey published by USDA-NRCS.
3. Topsoiling is limited to areas having 2:1 or flatter slopes where:
   a. The texture of the exposed subsoil/parent material is not adequate to produce vegetative growth.
   b. The soil material is so shallow that the rooting zone is not deep enough to support plants or furnish continuing supplies of moisture and plant nutrients.
   c. The original soil to be vegetated contains material toxic to plant growth.
   d. The soil is so acidic that treatment with limestone is not feasible.
4. Areas having slopes steeper than 2:1 require special consideration and design.
5. Topsoil Specifications: Soil to be used as topsoil must meet the following criteria:
   a. Topsoil must be a loam, sandy loam, clay loam, silt loam, sandy clay loam, or loamy sand. Other soils may be used if recommended by an agronomist or soil scientist and approved by the appropriate approval authority. Topsoil must not be a mixture of contrasting textured subsoils and must contain less than 5 percent by volume of cinders, stones, slag, coarse fragments, gravel, sticks, roots, trash, or other materials larger than 1½ inches in diameter.
   b. Topsoil must be free of noxious plants or plant parts such as Bermuda grass, quack grass, Johnson grass, nut sedge, poison ivy, thistle, or others as specified.
   c. Topsoil substitutes or amendments, as recommended by a qualified agronomist or soil scientist and approved by the appropriate approval authority, may be used in lieu of natural topsoil.
6. Topsoil Application
   a. Erosion and sediment control practices must be maintained when applying topsoil.
   b. Uniformly distribute topsoil in a 5 to 8 inch layer and lightly compact to a minimum thickness of 4 inches. Spreading is to be performed in such a manner that sodding or seeding can proceed with a minimum of additional soil preparation and tillage. Any irregularities in the surface resulting from topsoiling or other operations must be corrected in order to prevent the formation of depressions or water pockets.
   c. Topsoil must not be placed if the topsoil or subsoil is in a frozen or muddy condition, when the subsoil is excessively wet or in a condition that may otherwise be detrimental to proper grading

and seedbed preparation.

C. Soil Amendments (Fertilizer and Lime Specifications)

1. Soil tests must be performed to determine the exact ratios and application rates for both lime and fertilizer on sites having disturbed areas of 5 acres or more. Soil analysis may be performed by a recognized private or commercial laboratory. Soil samples taken for engineering purposes may also be used for chemical analyses.
2. Fertilizers must be uniform in composition, free flowing and suitable for accurate application by appropriate equipment. Manure may be substituted for fertilizer with prior approval from the appropriate approval authority. Fertilizers must all be delivered to the site fully labeled according to the applicable laws and must bear the name, trade name or trademark and warranty of the producer.
3. Lime materials must be ground limestone (hydrated or burnt lime may be substituted except when hydroseeding) which contains at least 50 percent total oxides (calcium oxide plus magnesium oxide). Limestone must be ground to such fineness that at least 50 percent will pass through a #100 mesh sieve and 98 to 100 percent will pass through a #20 mesh sieve.
4. Lime and fertilizer are to be evenly distributed and incorporated into the top 3 to 5 inches of soil by disking or other suitable means.
5. Where the subsoil is either highly acidic or composed of heavy clays, spread ground limestone at the rate of 4 to 8 tons/acre (200-400 pounds per 1,000 square feet) prior to the placement of topsoil.

B-4-3 STANDARDS AND SPECIFICATIONS

FOR

SEEDING AND MULCHING

Definition

The application of seed and mulch to establish vegetative cover.

Purpose

To protect disturbed soils from erosion during and at the end of construction.

Conditions Where Practice Applies

To the surface of all perimeter controls, slopes, and any disturbed area not under active grading.

Criteria

A. Seeding

1. Specifications
   a. All seed must meet the requirements of the Maryland State Seed Law. All seed must be subject to re-testing by a recognized seed laboratory. All seed used must have been tested within the 6 months immediately preceding the date of sowing such material on any project. Refer to Table B.4 regarding the quality of seed. Seed tags must be available upon request to the inspector to verify type of seed and seeding rate.
   b. Mulch alone may be applied between the fall and spring seeding dates only if the ground is frozen. The appropriate seeding mixture must be applied when the ground thaws.
   c. Inoculants: The inoculant for treating legume seed in the seed mixtures must be a pure culture of nitrogen fixing bacteria prepared specifically for the species. Inoculants must not be used later than the date indicated on the container. Add fresh inoculants as directed on the package. Use four times the recommended rate when hydroseeding. Note: It is very important to keep inoculant as cool as possible until used. Temperatures above 75 to 80 degrees Fahrenheit can weaken bacteria and make the inoculant less effective.
   d. Sod or seed must not be placed on soil which has been treated with soil sterilants or chemicals used for weed control until sufficient time has elapsed (14 days min.) to permit dissipation of phyto-toxic materials.
2. Application
   a. Dry Seeding: This includes use of conventional drop or broadcast spreaders.
      i. Incorporate seed into the subsoil at the rates prescribed on Temporary Seeding Table B.1, Permanent Seeding Table B.3, or site-specific seeding summaries.
      ii. Apply seed in two directions, perpendicular to each other. Apply half the seeding rate in each direction. Roll the seeded area with a weighted roller to provide good seed to soil contact.

   b. Drill or Cultipacker Seeding: Mechanized seeders that apply and cover seed with soil.
      i. Cultipacking seeders are required to bury the seed in such a fashion as to provide at least 1/4 inch of soil covering. Seedbed must be firm after planting.
      ii. Apply seed in two directions, perpendicular to each other. Apply half the seeding rate in each direction.
   c. Hydroseeding: Apply seed uniformly with hydroseeder (slurry includes seed and fertilizer).
      i. If fertilizer is being applied at the time of seeding, the application rates should not exceed the following: nitrogen, 100 pounds per acre total of soluble nitrogen; P_2O_5 (phosphorous), 200 pounds per acre; K_2O (potassium), 200 pounds per acre.
      ii. Lime: Use only ground agricultural limestone (up to 3 tons per acre may be applied by hydroseeding). Normally, not more than 2 tons are applied by hydroseeding at any one time. Do not use burnt or hydrated lime when hydroseeding.
      iii. Mix seed and fertilizer on site and seed immediately and without interruption.
      iv. When hydroseeding do not incorporate seed into the soil.

D. Mulching

1. Mulch Materials (in order of preference)
   a. Straw consisting of thoroughly threshed wheat, rye, oat, or barley and reasonably bright in color. Straw is to be free of noxious weed seeds as specified in the Maryland Seed Law and not musty, moldy, caked, decayed, or excessively dusty. Note: Use only sterile straw mulch in areas where one species of grass is desired.
   b. Wood Cellulose Fiber Mulch (WCFM) consisting of specially prepared wood cellulose processed into a uniform fibrous physical state.
      i. WCFM is to be dyed green or contain a green dye in the package that will provide an appropriate color to facilitate visual inspection of the uniformly spread slurry.
      ii. WCFM, including dye, must contain no germination or growth inhibiting factors.
      iii. WCFM materials are to be manufactured and processed in such a manner that the wood cellulose fiber mulch will remain in uniform suspension in water under agitation and will blend with seed, fertilizer and other additives to form a homogeneous slurry. The mulch material must form a blotter-like ground cover, on application, having moisture absorption and percolation properties and must cover and hold grass seed in contact with the soil without inhibiting the growth of the grass seedlings.
      iv. WCFM material must not contain elements or compounds at concentration levels that will be phyto-toxic.
      v. WCFM must conform to the following physical requirements: fiber length of approximately 10 millimeters, diameter approximately 1 millimeter, pH range of 4.0 to 8.5, ash content of 1.6 percent maximum and water holding capacity of 90 percent minimum.

NOTES CON'T ON NEXT SHEET

MARYLAND DEPARTMENT OF TRANSPORTATION

MARYLAND TRANSIT ADMINISTRATION

MTA Maryland

Gannett Fleming

WR&A WHITMAN, REQUARDT & ASSOCIATES, LLP

RJM ENGINEERING, INC. CONSULTING ENGINEERS ELLICOTT CITY, MARYLAND

PROFESSIONAL CERTIFICATION

I hereby certify that these documents were prepared or approved by me, and that I am a duly licensed professional engineer under the laws of the State of Maryland

13488 — License No. | 8/14/13 — Expiration Date

NO.	DESCRIPTION	BY	DATE
1	SHEET ADDED	MWA	10/30/13

REVISIONS

DESIGN: MWA
DRAWN: MWA
CHECK: JDC
APPR: INT

CENTREVILLE FREIGHT RAIL LINE PERMANENT REPAIRS

EROSION AND SEDIMENT CONTROL NOTES

DATE: JULY, 2013 | SCALE: AS SHOWN

CONTRACT NO. T-0590-3140

DRAWING NO. ES-01A

SHEET NO. 33A OF 38

c:\pwworking\mtopw\wro-jason.coster\dms72447\CFLNpES0001.dgn
10/30/2013

2. Application

a. Apply mulch to all seeded areas immediately after seeding.

b. When straw mulch is used, spread it over all seeded areas at the rate of 2 tons per acre to a uniform loose depth of 1 to 2 inches. Apply mulch to achieve a uniform distribution and depth so that the soil surface is not exposed. When using a mulch anchoring tool, increase the application rate to 2.5 tons per acre.

c. Wood cellulose fiber used as mulch must be applied at a net dry weight of 1500 pounds per acre. Mix the wood cellulose fiber with water to attain a mixture with a maximum of 50 pounds of wood cellulose fiber per 100 gallons of water.

3. Anchoring

a. Perform mulch anchoring immediately following application of mulch to minimize loss by wind or water. This may be done by one of the following methods (listed by preference), depending upon the size of the area and erosion hazard:

i. A mulch anchoring tool is a tractor drawn implement designed to punch and anchor mulch into the soil surface a minimum of 2 inches. This practice is most effective on large areas, but is limited to flatter slopes where equipment can operate safely. If used on sloping land, this practice should follow the contour.

ii. Wood cellulose fiber may be used for anchoring straw. Apply the fiber binder at a net dry weight of 750 pounds per acre. Mix the wood cellulose fiber with water at a maximum of 50 pounds of wood cellulose fiber per 100 gallons of water.

iii. Synthetic binders such as Acrylic DLR (Agro-Tack), DCA-70, Petroset, Terra Tax II, Terra Tack AR or other approved equal may be used. Follow application rates as specified by the manufacturer. Application of liquid binders needs to be heavier at the edges where wind catches mulch, such as in valleys and on crests of banks. Use of asphalt binders is strictly prohibited.

iv. Lightweight plastic netting may be stapled over the mulch according to manufacturer recommendations. Netting is usually available in rolls 4 to 15 feet wide and 300 to 3,000 feet long.

B-4-4 STANDARDS AND SPECIFICATIONS

FOR

TEMPORARY STABILIZATION

Definition

To stabilize disturbed soils with vegetation for up to 6 months.

Purpose

To use fast growing vegetation that provides cover on disturbed soils.

Conditions Where Practice Applies

Exposed soils where ground cover is needed for a period of 6 months or less. For longer duration of time, permanent stabilization practices are required.

Criteria

1. Select one or more of the species or seed mixtures listed in Table B.1 for the appropriate Plant Hardiness Zone (from Figure B.3) and enter them in the Temporary Seeding Summary below along with application rates, seeding dates and seeding depths. If this Summary is not put on the plan and completed, then Table B.1 plus fertilizer and lime rates must be put on the plan.

2. For sites having soil tests performed, use and show the recommended rates by the testing agency. Soil tests are not required for Temporary Seeding.

3. When stabilization is required outside of a seeding season, apply seed and mulch or straw mulch alone as prescribed in Section B-4-3.A.1.b and maintain until the next seeding season.

Temporary Seeding Summary

Hardiness Zone (from Figure B.3): 7A Seed Mixture (from Table B.1): OATS					Fertilizer Rate (10-20-20)	Lime Rate
No.	Species	Application Rate (lb/ac)	Seeding Dates	Seeding Depths		
	OATS	72	2/15-4/30, 8/15-11/30	1-IN	436 lb/ac (10 lb/1000 sf)	2 tons/ac (90 lb/1000 sf)

B-4-5 STANDARDS AND SPECIFICATIONS

FOR

PERMANENT STABILIZATION

Definition

To stabilize disturbed soils with permanent vegetation.

Purpose

To use long-lived perennial grasses and legumes to establish permanent ground cover on disturbed soils.

Conditions Where Practice Applies

Exposed soils where ground cover is needed for 6 months or more.

Criteria

A. Seed Mixtures

1. General Use

a. Select one or more of the species or mixtures listed in Table B.3 for the appropriate Plant Hardiness Zone (from Figure B.3) and based on the site condition or purpose found on Table B.2. Enter selected mixture(s), application rates, and seeding dates in the Permanent Seeding Summary. The Summary is to be placed on the plan.

b. Additional planting specifications for exceptional sites such as shorelines, stream banks, or dunes or for special purposes such as wildlife or aesthetic treatment may be found in USDA-NRCS Technical Field Office Guide, Section 342 - Critical Area Planting.

c. For sites having disturbed area over 5 acres, use and show the rates recommended by the soil testing agency.

d. For areas receiving low maintenance, apply urea form fertilizer (46-0-0) at 3 ½ pounds per 1000 square feet (150 pounds per acre) at the time of seeding in addition to the soil amendments shown in the Permanent Seeding Summary.

2. Turfgrass Mixtures

a. Areas where turfgrass may be desired include lawns, parks, playgrounds, and commercial sites which will receive a medium to high level of maintenance.

b. Select one or more of the species or mixtures listed below based on the site conditions or purpose. Enter selected mixture(s), application rates, and seeding dates in the Permanent Seeding Summary. The summary is to be placed on the plan.

i. Kentucky Bluegrass: Full Sun Mixture: For use in areas that receive intensive management. Irrigation required in the areas of central Maryland and Eastern Shore. Recommended Certified Kentucky Bluegrass Cultivars Seeding Rate: 1.5 to 2.0 pounds per 1000 square feet. Choose a minimum of three Kentucky bluegrass cultivars with each ranging from 10 to 35 percent of the total mixture by weight.

ii. Kentucky Bluegrass/Perennial Rye: Full Sun Mixture: For use in full sun areas where

rapid establishment is necessary and when turf will receive medium to intensive management. Certified Perennial Ryegrass Cultivars/Certified Kentucky Bluegrass Seeding Rate: 2 pounds mixture per 1000 square feet. Choose a minimum of three Kentucky bluegrass cultivars with each ranging from 10 to 35 percent of the total mixture by weight.

iii. Tall Fescue/Kentucky Bluegrass: Full Sun Mixture: For use in drought prone areas and/or for areas receiving low to medium management in full sun to medium shade. Recommended mixture includes: Certified Tall Fescue Cultivars 95 to 100 percent. Certified Kentucky Bluegrass Cultivars 0 to 5 percent. Seeding Rate: 5 to 8 pounds per 1000 square feet. One or more cultivars may be blended.

iv. Kentucky Bluegrass/Fine Fescue: Shade Mixture. For use in areas with shade in Bluegrass lawns. For establishment in high quality, intensively managed turf area. Mixture includes, Certified Kentucky Bluegrass Cultivars 30 to 40 percent and Certified Fine Fescue and 60 to 70 percent. Seeding Rate: 1½ to 3 pounds per 1000 square feet.

Notes:
Select turfgrass varieties from those listed in the most current University of Maryland Publication, Agronomy Memo #77, "Turfgrass Cultivar Recommendations for Maryland"

Choose certified material. Certified material is the best guarantee of cultivar purity. The certification program of the Maryland Department of Agriculture, Turf and Seed Section, provides a reliable means of consumer protection and assures a pure genetic line

c. Ideal Times of Seeding for Turf Grass Mixtures

Western MD: March 15 to June 1, August 1 to October 1 (Hardiness Zones: 5b, 6a)

Central MD: March 1 to May 15, August 15 to October 15 (Hardiness Zone: 6b)

Southern MD, Eastern Shore: March 1 to May 15, August 15 to October 15 (Hardiness Zones: 7a, 7b)

d. Till areas to receive seed by disking or other approved methods to a depth of 2 to 4 inches, level and rake the areas to prepare a proper seedbed. Remove stones and debris over 1½ inches in diameter. The resulting seedbed must be in such condition that future mowing of grasses will pose no difficulty.

e. If soil moisture is deficient, supply new seedings with adequate water for plant growth (½ to 1 inch every 3 to 4 days depending on soil texture) until they are firmly established. This is especially true when seedings are made late in the planting season, in abnormally dry or hot seasons, or on adverse sites.

Permanent Seeding Summary

Hardiness Zone (from Figure B.3): 7A Seed Mixture (from Table B.3): 4					Fertilizer Rate (10-20-20)			Lime Rate
No.	Species	Application Rate (lb/ac)	Seeding Dates	Seeding Depths	N	P_2O_5	K_2O	
4	CREEPING RED FESCUE	20	2/15-4/30, 8/1-9/30	¼-½ in	45 pounds per acre (1.0 lb/1000 sf)	90 lb/ac (2 lb/1000 sf)	90 lb/ac (2 lb/1000 sf)	2 tons/ac (90 lb/1000 sf)
	DEER-TONGUE	15	2/15-4/30, 8/1-9/30	¼-½ in				
	VIR. WILD RYE	5	2/15-4/30, 8/1-9/30	¼-½ in				

B. Sod: To provide quick cover on disturbed areas (2:1 grade or flatter).

1. General Specifications

a. Class of turfgrass sod must be Maryland State Certified. Sod labels must be made available to the job foreman and inspector.

b. Sod must be machine cut at a uniform soil thickness of ¾ inch, plus or minus ¼ inch, at the time of cutting. Measurement for thickness must exclude top growth and thatch. Broken pads and torn or uneven ends will not be acceptable.

c. Standard size sections of sod must be strong enough to support their own weight and retain their size and shape when suspended vertically with a firm grasp on the upper 10 percent of the section.

d. Sod must not be harvested or transplanted when moisture content (excessively dry or wet) may adversely affect its survival.

e. Sod must be harvested, delivered, and installed within a period of 36 hours. Sod not transplanted within this period must be approved by an agronomist or soil scientist prior to its installation.

2. Sod Installation

a. During periods of excessively high temperature or in areas having dry subsoil, lightly irrigate the subsoil immediately prior to laying the sod.

b. Lay the first row of sod in a straight line with subsequent rows placed parallel to it and tightly wedged against each other. Stagger lateral joints to promote more uniform growth and strength. Ensure that sod is not stretched or overlapped and that all joints are butted tight in order to prevent voids which would cause air drying of the roots.

c. Wherever possible, lay sod with the long edges parallel to the contour and with staggering joints. Roll and tamp, peg or otherwise secure the sod to prevent slippage on slopes. Ensure solid contact exists between sod roots and the underlying soil surface.

d. Water the sod immediately following rolling and tamping until the underside of the new sod pad and soil surface below the sod are thoroughly wet. Complete the operations of laying, tamping and irrigating for any piece of sod within eight hours.

3. Sod Maintenance

a. In the absence of adequate rainfall, water daily during the first week or as often and sufficiently as necessary to maintain moist soil to a depth of 4 inches. Water sod during the heat of the day to prevent wilting.

b. After the first week, sod watering is required as necessary to maintain adequate moisture content.

c. Do not mow until the sod is firmly rooted. No more than ⅓ of the grass leaf must be removed by the initial cutting or subsequent cuttings. Maintain a grass height of at least 3 inches unless otherwise specified.

MARYLAND DEPARTMENT OF TRANSPORTATION

MARYLAND TRANSIT ADMINISTRATION

MTA Maryland

Gannett Fleming

WR&A

WHITMAN, REQUARDT & ASSOCIATES, LLP

RJM ENGINEERING, INC.
CONSULTING ENGINEERS
ELLICOTT CITY, MARYLAND

PROFESSIONAL CERTIFICATION
I hereby certify that these documents were prepared or approved by me, and that I am a duly licensed professional engineer under the laws of the State of Maryland
13488 — License No.
6/14/13 — Expiration Date

NO.	DESCRIPTION	BY	DATE
1	SHEET ADDED	MWA	10/30/13

REVISIONS

DESGN: MWA
DRAWN: MWA
CHECK: JDC
APPR: INT

CENTREVILLE FREIGHT RAIL LINE
PERMANENT REPAIRS

EROSION AND SEDIMENT CONTROL NOTES

DATE: OCTOVBER, 2013
SCALE: AS SHOWN

CONTRACT NO. T-0590-3140
DRAWING NO. ES-01B
SHEET NO. 33B OF 38

c:\pwworking\mtapw\wra-jason cosler\dms72447\CFLNpES0001.dgn
10/30/2013

DETAIL C-9 DIVERSION FENCE

STANDARD SYMBOL: ——DF——

MAXIMUM DRAINAGE AREA = 2 ACRES

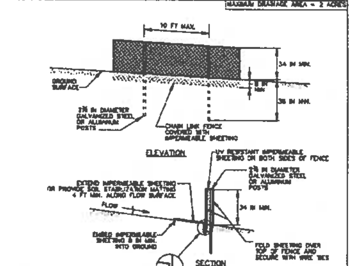

CONSTRUCTION SPECIFICATIONS

1. USE 42 INCH HIGH, 9 GAUGE OR THICKER CHAIN LINK FENCING (2⅜ INCH MAXIMUM OPENING).
2. USE 2⅜ INCH DIAMETER GALVANIZED STEEL POSTS OF 0.095 INCH WALL THICKNESS AND SIX FOOT LENGTH SPACED NO FURTHER THAN 10 FEET APART. THE POSTS DO NOT NEED TO BE SET IN CONCRETE.
3. FASTEN CHAIN LINK FENCE SECURELY TO THE FENCE POSTS WITH WIRE TIES.
4. SECURE 10 MIL OR THICKER UV RESISTANT, IMPERMEABLE SHEETING TO CHAIN LINK FENCE WITH TIES SPACED EVERY 24 INCHES AT TOP, MID SECTION, AND BELOW GROUND SURFACE.
5. EXTEND SHEETING A MINIMUM OF 4 FEET ALONG FLOW SURFACE AND EMBED END A MINIMUM OF 8 INCHES INTO GROUND. SOIL STABILIZATION MATTING MAY BE USED IN LIEU OF IMPERMEABLE SHEETING ALONG FLOW SURFACE.
6. WHEN TWO SECTIONS OF SHEETING ADJOIN EACH OTHER, OVERLAP BY 6 INCHES AND FOLD WITH SEAM FACING DOWNGRADE.
7. KEEP FLOW SURFACE ALONG DIVERSION FENCE AND POINT OF DISCHARGE FREE OF EROSION. REMOVE ACCUMULATED SEDIMENT AND DEBRIS. MAINTAIN POSITIVE DRAINAGE. REPLACE IMPERMEABLE SHEETING IF TORN. IF UNDERMINING OCCURS, REINSTALL FENCE.

MARYLAND STANDARDS AND SPECIFICATIONS FOR SOIL EROSION AND SEDIMENT CONTROL		
U.S. DEPARTMENT OF AGRICULTURE NATURAL RESOURCES CONSERVATION SERVICE	2011	MARYLAND DEPARTMENT OF ENVIRONMENT WATER MANAGEMENT ADMINISTRATION

C.27

C-9 STANDARDS AND SPECIFICATIONS

FOR

DIVERSION FENCE

Definition

A temporary barrier of impermeable sheeting over chain link fence located in such a manner as to direct water to a desired location.

Purpose

To direct sediment-laden runoff to a sediment trapping practice, or to intercept and divert clear water away from disturbed areas.

Conditions Where Practice Applies

Constructed along the limit of disturbance (LOD) or across disturbed areas, a diversion fence is used when there is insufficient space to construct an earth dike, temporary swale, or perimeter dike swale.

Appropriate uses of diversion fences include the following:

1. To divert sediment-laden runoff from a disturbed area to a sediment trapping practice.
2. To segment drainage areas for reducing acreage to sediment control practices.
3. To divert clear water from an undisturbed area to a stable outlet at non-erosive velocities.

Design Criteria

1. The maximum slope along fence is 10 percent.
2. The maximum drainage area is 2 acres.
3. For drainage areas larger than 2 acres, an engineering design may be used based on the 2-year frequency storm with NRCS methodologies (i.e., TR-55, TR-20), assuming the worst soil cover conditions to prevail in the contributing drainage area over the life of the diversion fence.
4. Maintain positive drainage along the entire length of the diversion fence. Spot elevations must be provided for diversion fence having longitudinal slopes flatter than 1%.
5. Discharge velocities from diversion fence must be non-erosive.
6. Where diversion fence is used to convey runoff from disturbed areas, the discharge must be to a sediment control practice suitable for concentrated flow. Silt fence and super silt fence are unacceptable for receiving discharges from diversion fence.
7. Where diversion fence is used to convey clear water runoff, the discharge must be to an undisturbed, stable area at a non-erosive velocity (4 fps); otherwise, provide outlet protection.
8. When diversion fence is used in conjunction with a sediment trapping device, sequence construction so that the diversion fence installation follows completion of the sediment trapping device(s).

Maintenance

The flow surface along the diversion fence and at the point of discharge must be kept free of erosion. Accumulated sediment and debris must be removed and positive drainage maintained. Impermeable sheeting must be replaced if torn. If undermining occurs, reinstall fence.

C.25

DETAIL F-2 SUMP PIT

STANDARD SYMBOL: ⊠SP

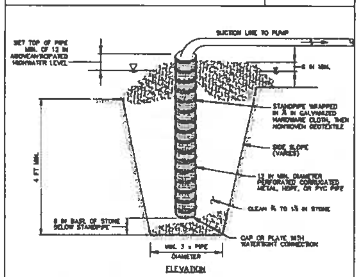

CONSTRUCTION SPECIFICATIONS

1. USE 12 INCH OR LARGER DIAMETER CORRUGATED METAL, HDPE, OR PVC PIPE WITH 1 INCH DIAMETER PERFORATIONS, 6 INCHES ON CENTER. BOTTOM OF PIPE MUST BE CAPPED WITH WATERTIGHT SEAL.
2. WRAP PIPE WITH ¼ INCH GALVANIZED HARDWARE CLOTH AND WRAP NONWOVEN GEOTEXTILE, AS SPECIFIED IN SECTION H-1 MATERIALS, OVER THE HARDWARE CLOTH.
3. EXCAVATE PIT TO THREE TIMES THE PIPE DIAMETER AND FOUR FEET IN DEPTH. PLACE ¾ TO 1½ INCH STONE OR EQUIVALENT RECYCLED CONCRETE, 6 INCHES IN DEPTH PRIOR TO PIPE PLACEMENT.
4. SET TOP OF PIPE MINIMUM 12 INCHES ABOVE ANTICIPATED WATER SURFACE ELEVATION.
5. BACKFILL PIT AROUND THE PIPE WITH ¾ TO 1½ INCH CLEAN STONE OR EQUIVALENT RECYCLED CONCRETE AND EXTEND STONE A MINIMUM OF 6 INCHES ABOVE ANTICIPATED WATER SURFACE ELEVATION.
6. DISCHARGE TO A STABLE AREA AT A NONEROSIVE RATE.
7. A SUMP PIT REQUIRES FREQUENT MAINTENANCE. IF SYSTEM CLOGS, REMOVE PERFORATED PIPE AND REPLACE GEOTEXTILE AND STONE. KEEP POINT OF DISCHARGE FREE OF EROSION.

MARYLAND STANDARDS AND SPECIFICATIONS FOR SOIL EROSION AND SEDIMENT CONTROL		
U.S. DEPARTMENT OF AGRICULTURE NATURAL RESOURCES CONSERVATION SERVICE	2011	MARYLAND DEPARTMENT OF ENVIRONMENT WATER MANAGEMENT ADMINISTRATION

F.3

F-2 STANDARDS AND SPECIFICATIONS

FOR

SUMP PIT

Definition

A perforated vertical standpipe wrapped with hardware cloth and geotextile placed in an excavated pit that is backfilled with stone. Water is pumped from the standpipe to a stable discharge area.

Purpose

To remove and filter sediment-laden water from excavations.

Conditions Where Practice Applies

When dewatering is needed for a short duration (i.e., less than 3 months) in association with excavations, trenches, cofferdams, sediment traps or basins.

Design Criteria

The location of sump pits must be included on the plan. A sump pit may be relocated to optimize its use but changes to the discharge location must be coordinated with the appropriate enforcement authority.

Maintenance

The sump pit requires frequent maintenance. If the system clogs, the perforated pipe needs to be removed and the geotextile and stone replaced. The point of discharge must be kept free of erosion.

F.4

DETAIL E-3 SUPER SILT FENCE

STANDARD SYMBOL: ——SSF——

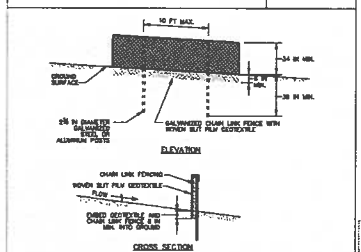

CONSTRUCTION SPECIFICATIONS

1. INSTALL 2⅜ INCH DIAMETER GALVANIZED STEEL POSTS OF 0.095 INCH WALL THICKNESS AND SIX FOOT LENGTH SPACED NO FURTHER THAN 10 FEET APART. DRIVE THE POSTS A MINIMUM OF 36 INCHES INTO THE GROUND.
2. FASTEN 9 GAUGE OR HEAVIER GALVANIZED CHAIN LINK FENCE (2⅜ INCH MAXIMUM OPENING) 42 INCHES IN HEIGHT SECURELY TO THE FENCE POSTS WITH WIRE TIES OR HUG RINGS.
3. FASTEN WOVEN SLIT FILM GEOTEXTILE AS SPECIFIED IN SECTION H-1 MATERIALS, SECURELY TO THE UPSLOPE SIDE OF CHAIN LINK FENCE WITH TIES SPACED EVERY 24 INCHES AT THE TOP AND MID SECTION. EMBED GEOTEXTILE AND CHAIN LINK FENCE A MINIMUM OF 8 INCHES INTO THE GROUND.
4. WHERE ENDS OF THE GEOTEXTILE COME TOGETHER, THE ENDS SHALL BE OVERLAPPED BY 6 INCHES, FOLDED, AND STAPLED TO PREVENT SEDIMENT BY PASS.
5. EXTEND BOTH ENDS OF THE SUPER SILT FENCE A MINIMUM OF FIVE HORIZONTAL FEET UPSLOPE AT 45 DEGREES TO THE MAIN FENCE ALIGNMENT TO PREVENT RUNOFF FROM GOING AROUND THE ENDS OF THE SUPER SILT FENCE.
6. PROVIDE MANUFACTURER CERTIFICATION TO THE INSPECTION/ENFORCEMENT AUTHORITY SHOWING THAT GEOTEXTILE USED MEETS THE REQUIREMENTS IN SECTION H-1 MATERIALS.
7. REMOVE ACCUMULATED SEDIMENT AND DEBRIS WHEN BULGES DEVELOP IN FENCE OR WHEN SEDIMENT REACHES 25% OF FENCE HEIGHT. REPLACE GEOTEXTILE IF TORN. IF UNDERMINING OCCURS, REINSTALL CHAIN LINK FENCING AND GEOTEXTILE.

MARYLAND STANDARDS AND SPECIFICATIONS FOR SOIL EROSION AND SEDIMENT CONTROL		
U.S. DEPARTMENT OF AGRICULTURE NATURAL RESOURCES CONSERVATION SERVICE	2011	MARYLAND DEPARTMENT OF ENVIRONMENT WATER MANAGEMENT ADMINISTRATION

E.7

DETAIL C-6 CLEAR WATER DIVERSION PIPE

STANDARD SYMBOL: CWD — 18

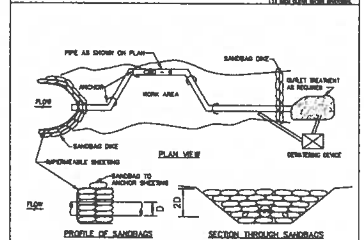

CONSTRUCTION SPECIFICATIONS

1. FLEXIBLE PIPE IS PREFERRED. HOWEVER, CORRUGATED METAL PIPE OR EQUIVALENT PVC PIPE CAN BE USED. MAKE ALL JOINTS WATERTIGHT.
2. FOR SANDBAGS USE MATERIALS THAT ARE RESISTANT TO ULTRA-VIOLENT RADIATION, TEARING, AND PUNCTURE AND WOVEN TIGHTLY ENOUGH TO PREVENT LEAKAGE OF FILL MATERIAL.
3. USE 10 MIL OR THICKER, UV RESISTANT, IMPERMEABLE SHEETING OR OTHER APPROVED MATERIAL THAT IS IMPERMEABLE AND RESISTANT TO PUNCTURING AND TEARING.
4. PLACE IMPERMEABLE SHEETING SUCH THAT UPGRADE PORTION OVERLAPS DOWNGRADE PORTION BY A MINIMUM OF 18 INCHES.
5. SET HEIGHT OF SANDBAG DIKE AT TWICE THE PIPE DIAMETER. MAINTAIN HEIGHT ALONG LENGTH OF SANDBAG DIKE. PLACE DOUBLE ROW OF SANDBAGS.
6. AT A MINIMUM, SECURELY ANCHOR DIVERSION PIPE AT EACH DOWNGRADE JOINT.
7. SET OUTLET END OF DIVERSION PIPE LOWER THAN INLET END.
8. PROVIDE OUTLET PROTECTION AS REQUIRED ON APPROVED PLAN.
9. DEWATER WORK AREA USING AN APPROVED EROSION AND SEDIMENT CONTROL PRACTICE AS SPECIFIED ON APPROVED PLAN.
10. KEEP POINT OF DISCHARGE FREE OF EROSION. MAINTAIN WATER TIGHT CONNECTIONS AND POSITIVE DRAINAGE. REPLACE SANDBAGS AND IMPERMEABLE SHEETING IF TORN.

MARYLAND STANDARDS AND SPECIFICATIONS FOR SOIL EROSION AND SEDIMENT CONTROL		
U.S. DEPARTMENT OF AGRICULTURE NATURAL RESOURCES CONSERVATION SERVICE	2011	MARYLAND DEPARTMENT OF ENVIRONMENT WATER MANAGEMENT ADMINISTRATION

C.20

E-3 STANDARDS AND SPECIFICATIONS

FOR

SUPER SILT FENCE

Definition

A temporary barrier of woven geotextile over chain link fence used to intercept, retain, and filter sediment-laden runoff from disturbed areas.

Purpose

To intercept sediment-laden sheet flow runoff allowing the deposition of sediment transported from upslope. Super silt fence must not be used as a velocity check in swales or placed where it will intercept concentrated flow.

Conditions Where Practice Applies

Where the slope steepness or slope length criterion for silt fence cannot be met or where additional protection is warranted such as adjacent to wetlands, streams, or other sensitive areas. The use of super silt fence is based on the slope length and steepness of the contributing drainage area.

Design Criteria

Table E.3: Super Silt Fence Design Constraints

Average Slope Steepness	Maximum Slope Length	Maximum Super Silt Fence Length
Flatter than 10:1 (< 10%)	Unlimited	Unlimited
10:1 to 5:1 (10 - 20%)	200 feet	1,500 feet
<5:1 to 3:1 (>20 - 33%)	100 feet	1,000 feet
<3:1 to 2:1 (>33 - 50%)	100 feet	500 feet
Steeper than 2:1 (>50%)	50 feet	250 feet

1. Super silt fence should be placed on the contour. No section of super silt fence is to exceed a grade of 5% for a distance of more than 50 feet.
2. Super silt fence should be used with caution in areas where rocky soil may prevent trenching.
3. The use of super silt fence must conform to the design constraints listed in Table E.3 above.
4. Extend both ends of the silt fence a minimum five (5) feet horizontally upslope at 45 degrees to the main fence alignment to prevent runoff from going around the ends of the silt fence.

Maintenance

Accumulated sediment and debris must be removed when bulges develop in the fence or when sediment reaches 25 percent of the fence height. The geotextile must be replaced if torn. If undermining occurs, reinstall chain link fencing and geotextile.

E.6

C-6 STANDARDS AND SPECIFICATIONS

FOR

CLEAR WATER DIVERSION PIPE

Definition

A temporary pipe installed in conjunction with sandbag dikes. Use of flexible pipe is preferred.

Purpose

To convey channel or pipe flow around a work area.

Conditions Where Practice Applies

This practice is used when the proposed work is located in a drainage way.

Design Criteria

Table C.6: Clear Water Diversion Pipe Design Criteria

Maximum Drainage Area (acres)	Pipe Diameter (inches)
0.5	12
1.5	18
2.5	21
3.5	24
5.0	twin 24

1. The height of the sandbag dike must be a minimum of twice the diameter of the diversion pipe.
2. The diversion pipe must outlet onto a stable area at a non-erosive velocity. Provide outlet protection, if necessary, in accordance with Section D - Erosion Control.
3. If the drainage area to the pipe diversion exceeds 5 acres, an engineering design must be used and based on the two-year storm event.

Note: A waterway construction permit is required when this practice is used to convey base flow for areas designated as waters of the State.

Maintenance

The point of discharge must be kept free of erosion. Water tight connections and positive drainage must be maintained. Sandbags and impermeable sheeting must be replaced if torn.

⚠3 Maryland's Guidelines To Waterway Construction
DETAIL 1.2: PUMP-AROUND PRACTICE

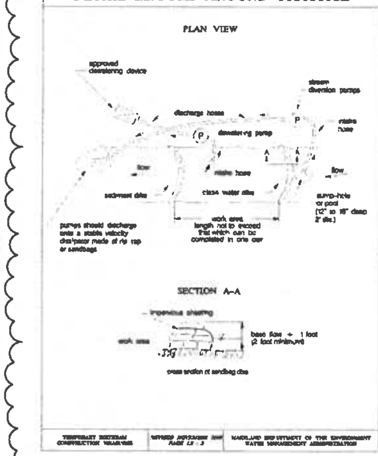

MARYLAND DEPARTMENT OF TRANSPORTATION / MARYLAND TRANSIT ADMINISTRATION / MTA Maryland	Gannett Fleming / WR&A WHITMAN, REQUARDT & ASSOCIATES, LLP	RJM ENGINEERING, INC. CONSULTING ENGINEERS ELLICOTT CITY, MARYLAND	PROFESSIONAL CERTIFICATION: I hereby certify that these documents were prepared or approved by me, and that I am a duly licensed professional engineer under the laws of the State of Maryland. 13488 License No. 8/14/13 Expiration Date

NO.	DESCRIPTION	BY	DATE
⚠3	ADDED PUMP-AROUND DETAIL	MWA	10/30/13

REVISIONS

DESIGN M.W.A. · DRAWN M.W.A. · CHECK J.D.C.

CENTREVILLE FREIGHT RAIL LINE PERMANENT REPAIRS

EROSION AND SEDIMENT CONTROL DETAILS

DATE: JULY, 2013 · SCALE: NONE

CONTRACT NO. T-0590-3140 · DRAWING NO. ES-02 · SHEET NO. 34 OF 38

c:\pwworking\mtapw\wra-jason coster\dms72447\CFLNpES0001.dgn
10/30/2013

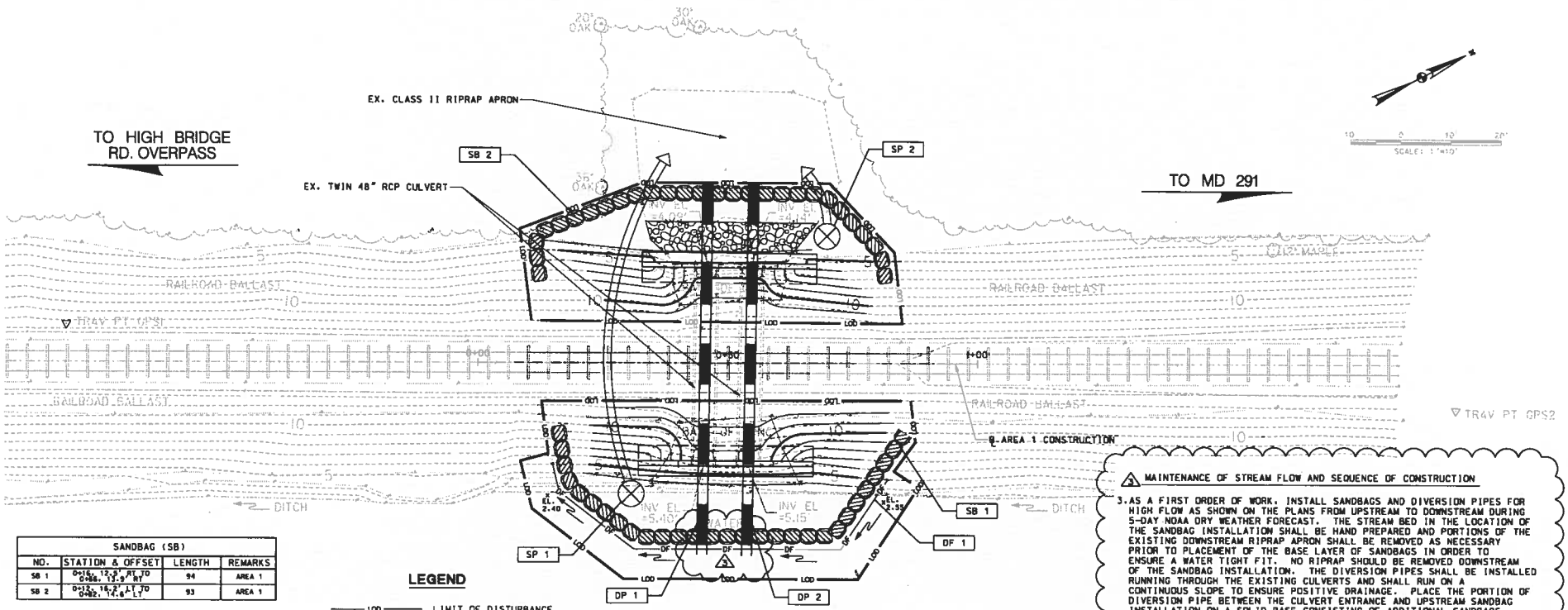

PLAN

SCALE: 1"=10'

SANDBAG (SB)			
NO.	STATION & OFFSET	LENGTH	REMARKS
SB 1	0+15, 12.9' RT TO 0+88, 12.9' RT	94	AREA 1
SB 2	0+12, 16.2' LT TO 0+92, 14.6' LT	93	AREA 1

SUMP PIT (SP)		
NO.	STATION & OFFSET	REMARKS
SP 1	0+30, 26.1' RT	AREA 1
SP 2	0+70, 25.4' LT	AREA 1

24" DIVERSION PIPE (DP)			
NO.	STATION & OFFSET	LENGTH	REMARKS
DP 1	0+45, 36.1' RT TO 0+48, 35.8' LT	74	AREA 1
DP 2	0+84, 36.4' RT TO 0+88, 35.8' LT	74	AREA 1

DIVERSION FENCE (DF)			
NO.	STATION & OFFSET	LENGTH	REMARKS
DF 1	0+15, 20.0' RT TO 0+92, 23.2' RT	83	AREA 1

LEGEND

- LOD — LIMIT OF DISTURBANCE
- EDGE OF EMBANKMENT/ GRADE BREAK
- EXISTING RIPRAP BOUNDARY
- DF — DIVERSION FENCE
- SANDBAG DIVERSION 3
- 24" DIVERSION PIPE
- SUMP PIT AND PUMP
- EXISTING RIPRAP BOUNDARY

NOTES:
1. CONTRACTOR SHALL ENSURE ALL CLEAR WATER DISCHARGED FROM SITE IS DONE SO IN A SAFE AND NON-EROSIVE MANNER.
2. CONTRACTOR SHALL NOT COMMENCE CLEARING AND GRUBBING WITHOUT PERMISSION FROM THE WMA INSPECTOR.
3. SANDBAG DIVERSIONS SHALL BE CONSTRUCTED TO AN ELEVATION 3' OR GREATER ABOVE THE INVERT OF DIVERSION PIPES.
4. ACCESS TO THE LOD WILL ONLY BE VIA RAIL-MOUNTED EQUIPMENT.

2 MAINTENANCE OF STREAM FLOW AND SEQUENCE OF CONSTRUCTION

1. THE CONTRACTOR SHALL CONTACT THE MARLYAND DEPARTMENT OF THE ENVIRONMENT (MDE) A MINIMUM OF SEVEN (7) DAYS PRIOR TO ANY EARTH DISTURBANCE IN ORDER TO SCHEDULE A PRE-CONSTRUCTION MEETING (UNLESS WAIVED BY THE ADMINISTRATION)
2. CONTRACTOR SHALL CLEARLY IDENTIFY IN THE FIELD THE LIMITS OF DISTURBANCE AND ALL SENSITIVE AREAS NOT TO BE DISTURBED PRIOR TO THE PRE-CONSTRUCTION MEETING.

3 MAINTENANCE OF STREAM FLOW AND SEQUENCE OF CONSTRUCTION

3. AS A FIRST ORDER OF WORK, INSTALL SANDBAGS AND DIVERSION PIPES FOR HIGH FLOW AS SHOWN ON THE PLANS FROM UPSTREAM TO DOWNSTREAM DURING 5-DAY NOAA DRY WEATHER FORECAST. THE STREAM BED IN THE LOCATION OF THE SANDBAG INSTALLATION SHALL BE HAND PREPARED AND PORTIONS OF THE EXISTING DOWNSTREAM RIPRAP APRON SHALL BE REMOVED AS NECESSARY PRIOR TO PLACEMENT OF THE BASE LAYER OF SANDBAGS IN ORDER TO ENSURE A WATER TIGHT FIT. NO RIPRAP SHOULD BE REMOVED DOWNSTREAM OF THE SANDBAG INSTALLATION. THE DIVERSION PIPES SHALL BE INSTALLED RUNNING THROUGH THE EXISTING CULVERTS AND SHALL RUN ON A CONTINUOUS SLOPE TO ENSURE POSITIVE DRAINAGE. PLACE THE PORTION OF DIVERSION PIPE BETWEEN THE CULVERT ENTRANCE AND UPSTREAM SANDBAG INSTALLATION ON A SOLID BASE CONSISTING OF ADDITIONAL SANDBAGS, AGGREGATE, OR OTHER MATERIAL AS APPROVED BY THE ENGINEER.
4. INSTALL DIVERSION FENCE FOR LOW FLOW AS SHOWN ON THE PLANS. THE CONTRACTOR SHALL ENSURE THAT NO PART OF THE DIVERSION FENCE OBSTRUCTS THE DIVERSION PIPE INVERTS AND OPENINGS.
5. INSTALL SUMP PITS FOR DEWATERING. SUMP PITS SHALL BE DRAINED TO EXISTING RIPRAP APRON DOWNSTREAM OF SANDBAG DIVERSION TO PROVIDE A STABLE OUTFLOW.
6. REMOVE EXISTING GROUT BAG HEADWALLS AND INSTALL PERMANENT CONCRETE HEADWALLS AS SHOWN ON THE PLANS. REMOVED AND EXCAVATED MATERIALS SHALL BE IMMEDIATELY REMOVED FROM THE SITE BY THE CONTRACTOR TO AN MDE-APPROVED LOCATION. CHECK EXISTING CULVERTS FOR SEDIMENT ACCUMULATION AS A RESULT OF CONSTRUCTION AND FLUSH CLEAN IF NECESSARY, DEWATERING THE DOWNSTREAM AREA WITH SUMP PIT.
7. COMPLETE FINAL GRADING AND INSTALL RIPRAP AS SHOWN ON THE PLANS.
8. UPON COMPLETION OF ALL CONSTRUCTION ACTIVITIES, STABILIZATION OF ALL DISTURBED AREAS IN ACCORDANCE WITH THE PERMANENT STABILIZATION SPECIFICATIONS, AND WITH THE APPROVAL OF THE MDE INSPECTOR, REMOVE ALL SEDIMENT CONTROLS DURING DRY WEATHER FORECAST AND RESTORE TO EXISTING CONDITIONS ANY GRADES OR PORTIONS OF RIPRAP APRON WHERE ALTERED OR REMOVED FOR SEDIMENT CONTROLS. STABILIZE ANY AREAS DISTURBED IN THE PROCESS.

MARYLAND DEPARTMENT OF TRANSPORTATION
MARYLAND TRANSIT ADMINISTRATION
MTA Maryland

Gannett Fleming
WR&A
WHITMAN, REQUARDT & ASSOCIATES, LLP

RJN ENGINEERING, INC.
CONSULTING ENGINEERS
ELLICOTT CITY, MARYLAND

PROFESSIONAL CERTIFICATION
I hereby certify that these documents were prepared or approved by me, and that I am a duly licensed professional engineer under the laws of the State of Maryland
13488 — License No.
6/14/13 — Expiration Date

NO.	DESCRIPTION	BY	DATE
1	REVISED NOTES & EXTENDED DIVERSION PIPE	MS	10/30/13

REVISIONS

DRAWN MS
DESIGN MS
CHECK MS
APPR

CENTREVILLE FREIGHT RAIL LINE
PERMANENT REPAIRS

MP 13.21 – AREA 1 ESC PLAN/
MAINTENANCE OF STREAM FLOW PLAN

DATE: JULY 2013 SCALE: AS SHOWN

CONTRACT NO. T-0590-3140
DRAWING NO. ES-03
SHEET NO. 35 OF 38

c:\pwworking\mtapw\wra-jason.coster\dms72447\CFLMpES0001.dgn
10/30/2013

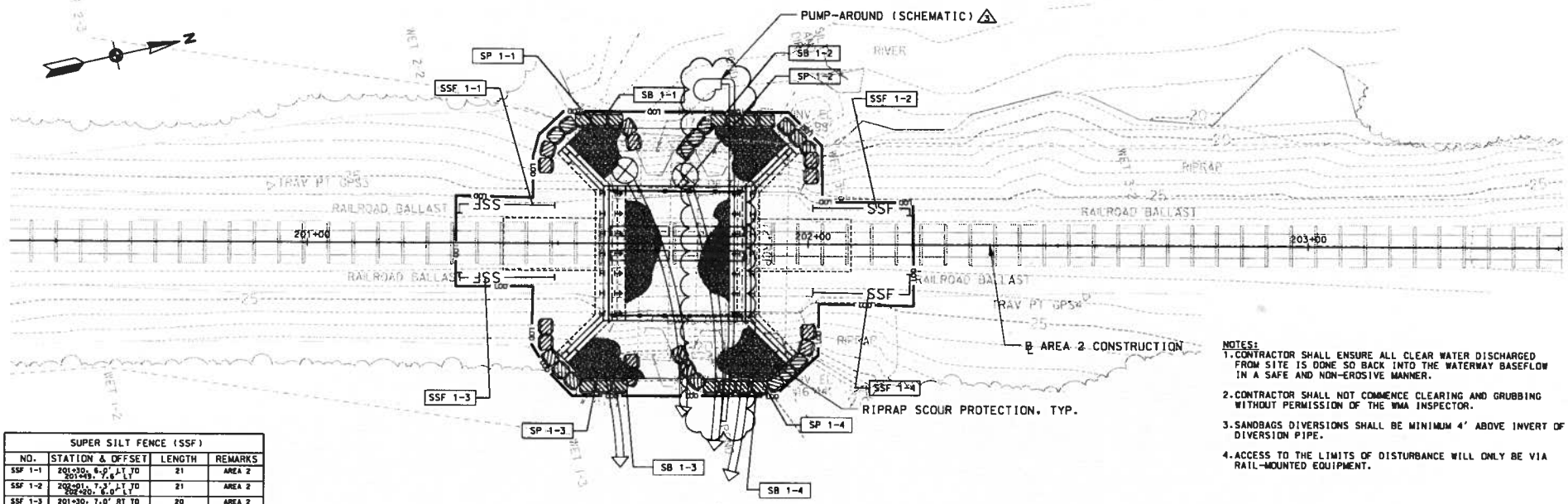

PLAN
SCALE: 1"=10'

NOTES:
1. CONTRACTOR SHALL ENSURE ALL CLEAR WATER DISCHARGED FROM SITE IS DONE SO BACK INTO THE WATERWAY BASEFLOW IN A SAFE AND NON-EROSIVE MANNER.
2. CONTRACTOR SHALL NOT COMMENCE CLEARING AND GRUBBING WITHOUT PERMISSION OF THE WMA INSPECTOR.
3. SANDBAGS DIVERSIONS SHALL BE MINIMUM 4' ABOVE INVERT OF DIVERSION PIPE.
4. ACCESS TO THE LIMITS OF DISTURBANCE WILL ONLY BE VIA RAIL-MOUNTED EQUIPMENT.

SUPER SILT FENCE (SSF)			
NO.	STATION & OFFSET	LENGTH	REMARKS
SSF 1-1	201+30, 6.0' LT TO 201+49, 7.6' LT	21	AREA 2
SSF 1-2	202+01, 7.3' LT TO 202+20, 6.0' LT	21	AREA 2
SSF 1-3	201+30, 7.0' RT TO 201+49, 6.0' RT	20	AREA 2
SSF 1-4	202+01, 6.0' RT TO 202+20, 10.0' RT	23	AREA 2

SANDBAG (SB)			
NO.	STATION & OFFSET	LENGTH	REMARKS
SB 1-1	201+48, 13.8' LT TO 201+63, 18.7' LT	31	AREA 2
SB 1-2	201+74, 17.4' LT TO 202+01, 12.2' LT	40	AREA 2
SB 1-3	201+48, 15.1' RT TO 201+69, 21.4' RT	35	AREA 2
SB 1-4	201+74, 20.8' RT TO 202+00, 14.8' RT	41	AREA 2

SUMP PIT (SP)		
NO.	STATION & OFFSET	REMARKS
SP 1-1	201+63, 14.6' LT	AREA 2
SP 1-2	201+75, 13.6' LT	AREA 2
SP 1-3	201+69, 24.3' RT	AREA 2
SP 1-4	201+88, 24.1' RT	AREA 2

LEGEND

- LOD — LIMIT OF DISTURBANCE
- SUMP PIT
- DEWATERING PUMP AND OUTLET
- DIVERSION CULVERT
- PROPOSED GRADING CONTOUR
- SANDBAG DIVERSION
- SSF — SUPER SILT FENCE
- RIPRAP SCOUR PROTECTION

MAINTENANCE OF STREAM FLOW AND SEQUENCE OF CONSTRUCTION

1. THE CONTRACTOR SHALL CONTACT THE MARLYAND DEPARTMENT OF THE ENVIRONMENT (MDE) A MINIMUM OF SEVEN (7) DAYS PRIOR TO ANY EARTH DISTURBANCE IN ORDER TO SCHEDULE A PRE-CONSTRUCTION MEETING (UNLESS WAIVED BY THE ADMINISTRATION)
2. CONTRACTOR SHALL CLEARLY IDENTIFY IN THE FIELD THE LIMITS OF DISTURBANCE AND ALL SENSETIVE AREAS NOT TO BE DISTURBED PRIOR TO THE PRE-CONSTRUCTION MEETING.
3. THE CONTRACTOR MAY SUBMIT FOR APPROVAL BY THE ENGINEER ALTERNATE DEVICES FOR THE SANDBAG DIVERSION.
4. △3 AS A FIRST ORDER OF WORK, INSTALL SANDBAGS AND SUPER SILT FENCE AS SHOWN ON THE PLANS. DURING 3-DAY NOAA DRY WEATHER FORECAST, INSTALL SUMP PITS FOR DEWATERING WHILE MAINTAINING FLOW THROUGH THE SOUTHERN CULVERT CELL. ALL IN-STREAM WORK SHALL BE PERFORMED BETWEEN MAY 16, 2014 AND MAY 20, 2014. REMOVE EXISTING TRACK AND BALLAST. REMOVED AND EXCAVATED MATERIALS SHALL BE IMMEDIATELY REMOVED FROM THE SITE BY THE CONTRACTOR TO AN MDE-APPROVED LOCATION.
5. △3 DURING 3-DAY NOAA DRY WEATHER FORECAST, EXCAVATE THE EXISTING EMBANKMENT AND REMOVE THE TWO (2) NORTHERNMOST EXISTING CULVERT CELLS. BRACE THE REMAINING CULVERT CELL AS DEEMED NECESSARY. ADDITIONAL SEALANT AROUND PIPE JOINTS MAY BE REQUIRED TO PREVENT SEEPAGE OF STREAMWATER INTO THE CONSTRUCTION AREA.

MAINTENANCE OF STREAM FLOW AND SEQUENCE OF CONSTRUCTION

6. △3 EXCAVATE THE ABUTMENT AREA NORTH OF THE CULVERT. DEWATERING THE AREA WITH A SUMP PIT. DRIVE FOUNDATION PILES AND PLACE PILE CAP AS SHOWN ON AREA 2 STRUCTURE PLANS. INSTALL ABUTMENT AND WINGWALLS. INSTALL RIPRAP SCOUR PROTECTION AS ALLOWED BY THE PRESENCE OF THE REMAINING CULVERT BARREL. BACKFILL AGAINST CONSTRUCTED ABUTMENT AND STABILIZE THE AREA.
7. △3 DURING 3-DAY NOAA DRY WEATHER FORECAST, INSTALL SANDBAGS ACROSS REMAINING CULVERT BARREL ENTRY AND REMOVE REMAINING CUVLERT AND BRACING USING A PUMP-AROUND OPERATION TO MAINTAIN STREAMFLOW. COMPLETE FINAL GRADING AND INSTALL REMAINING RIPRAP AS SHOWN ON THE PLANS.
8. △3 DURING 3-DAY NOAA DRY WEATHER FORECAST, REMOVE SANDBAG DIVERSION AND OPEN STREAM.
9. △3 INSTALL BRIDGE SUPERSTRUCTURE, PLACE NEW OR SALVAGED BALLAST AND TRACK.
10. UPON COMPLETION OF ALL CONSTRUCTION ACTIVITES, STABILIZATION OF ALL DISTURBED AREAS IN ACCORDANCE WITH THE PERMANENT STABILIZATION MEASURES AND WITH THE APPROVAL OF THE MDE INSPECTOR. REMOVE PERIMETER SEDIMENT CONTROLS ALONG THE RAILWAY CULVERT REPLACEMENT AND STABILIZE ANY AREAS DISTURBED IN THE PROCESS.

MARYLAND DEPARTMENT OF TRANSPORTATION
MARYLAND TRANSIT ADMINISTRATION — MTA Maryland

Gannett Fleming WR&A — WHITMAN, REQUARDT & ASSOCIATES, LLP

RJN ENGINEERING, INC. CONSULTING ENGINEERS ELLICOTT CITY, MARYLAND

PROFESSIONAL CERTIFICATION
I hereby certify that these documents were prepared or approved by me, and that I am a duly licensed professional engineer under the laws of the State of Maryland
13488 — License No.
6/14/13 — Expiration Date

NO.	DESCRIPTION	BY	DATE
3	DISPLAYED SCHEMATIC PUMP-AROUND	MWA	10/30/13
2	REVISED NOTES	MWA	10/30/13

REVISIONS

DESIGN M.W.A
DRAWN M.W.A
CHECK J.D.C
APPR

CENTREVILLE FREIGHT RAIL LINE
PERMANENT REPAIRS

AREA 2 ESC PLAN /
MAINTENANCE OF STREAM FLOW

DATE: JULY, 2013 SCALE: AS SHOWN

CONTRACT NO. T-0590-3140
DRAWING NO. ES-04
SHEET NO. 36 OF 38

c:\pwworking\mtapw\wra-jason.caster\dms72447\CRLNpES0001.dgn
10/30/2013

MARYLAND TRANSIT ADMINISTRATION

MARYLAND DEPARTMENT OF TRANSPORTATION
Martin O'Malley, Governor • Anthony G. Brown, Lt. Governor
James T. Smith, Jr., Secretary • Robert L. Smith, Administrator

TO: All Planholders

FROM: Maryland Transit Administration

SUBJECT: **ADDENDUM NO. 2**
Contract No.: T-0590-3140
Centerville Freight Line Permanent Repairs

DATE: October 10, 2013

Enclosed and effective this date is Addendum No. 2 to the subject Contract. This change does not delay the Bid Opening Date.

The Site Visit for this Procurement has been Changed from October 11, 2013 to Wednesday, October 16, 2013. A date change made to this contract is attached to this Addendum.

The Bidder shall acknowledge receipt of this Addendum by completing and returning this form with the bid package.

All other terms and conditions remain unchanged.

Sincerely,

Hattie M. Crosby, Procurement Officer
Construction/Installation Section
Procurement Division

Acknowledgement of receipt of ADDENDUM # 2 to Solicitation #T-0590-3140

Vendor Name: _____

_____ _____
Authorized Representative's Signature Date

MARYLAND TRANSIT ADMINISTRATION

MARYLAND DEPARTMENT OF TRANSPORTATION
Martin O'Malley, Governor • Anthony G. Brown, Lt. Governor
James T. Smith, Jr., Secretary • Robert L. Smith, Administrator

TO: All Planholders

FROM: Maryland Transit Administration

SUBJECT: **ADDENDUM NO.1**
Contract No.: T-0590-3140
Centerville Freight Rail Line Permanent Repairs

DATE: October 10, 2013

Enclosed and effective this date is Addendum No. 1 to the subject Contract. This change does not delay the Bid Opening Date.

The Site Visit scheduled on March 11, 2013 has been **CANCELED.**

The site visit has been rescheduled for: October 16, 2013 at 10:00 a.m.

The Bidder shall acknowledge receipt of this Addendum by completing and returning this form with the bid.

All other terms and conditions remain unchanged.

Sincerely,

Hattie M. Crosby, Procurement Officer
Construction/Installation Section
Procurement Division

Acknowledgement of receipt of ADDENDUM # 1 to Solicitation #T-0590-3140

Vendor Name: _____

_____ _____
Authorized Representative's Signature Date

ADDENDUM NO.:	1
DATE:	10/10/13
CONTRACT NO.:	T-0590-3140

The following additions, deletions, and modifications are hereby made a part of the Contract Documents of Centerville Freight Rail Line Permanent Repairs:

Site Visit Scheduled October 11, 2013 has been **canceled**:

The rescheduled Site Visit Date is **October 16, 2013 @ 10:00 A.M.**

End of Addendum No. 1

Hattie M. Crosby, Procurement Officer
October 10, 2013

MARYLAND TRANSIT ADMINISTRATION

MARYLAND DEPARTMENT OF TRANSPORTATION
Martin O'Malley, Governor • Anthony G. Brown, Lt. Governor
James T. Smith, Jr., Secretary • Robert L. Smith, Administrator

Centerville Freight Rail Line Permanent Repairs
Construction Contract
CONTRACT NO. T-0590-3140

PRE-BID CONFERENCE AGENDA
Thursday, October 10, 2013

- **WELCOME**

Good Morning and Welcome Everyone:

- **Round Table Introduction**

- **Procurement Officer**: Hattie M. Crosby

- **Bids Due Date**: November 14, 2013 **@ 2:00 p.m.**

- **Cut-Off Date for Questions**: October 22, 2013
  Please e-mail questions to : hcrosby@mta.maryland.gov

- **Paula Cullings, Director Office of Fair Practice**
- **Over all MBE Goal: 23% this is a state Contract with Sub-goals**

  ❖ **New Law MBE Liquidated Damages for State Contracts**

  - **Scope of Work: Mike Hart, Project Manager**

Questions/Responses ?

MARYLAND TRANSIT ADMINISTRATION
PRE-BID ATTENDANCE
CONTRACT NO. T-0590-3140
Centreville Freight Rail Line Permanent Repairs
OCTOBER 10, 2013 @ 10:00 A.M.

	CONTACT PERSON	NAME OF FIRM	TELEPHONE/FAX NO.
1	GEORGE ANDERSON	CTW	804-725-1111 CD
2	FRANK KERNAN	MTA QA/QC	(410) 767-3333
3	Josh Bullock	Bullock	Fax 7195 410-763-7250 CD
4	John Goodwin	Gardens	410.5397308
5	Michael Hank	MTA	410-767-3826
6	Carol O'Brocki	ONE STOP LEGAL	
7	~~Gene~~ M. Crosby	MTA Procurement	410-767-3446
8	Jason Lesler	WR&A	443-224-1559
9	TANYA SCHNLER	WR&A	410-246-3415
10	ARTHUR IVES	MTA QA/QC	410-767-3342
11	Richard E. Rhinehart	Rhinehart R.R.	410-879-1322 CD
12			
13			
14			