MARYLAND TRANSIT ADMINISTRATION
MARYLAND DEPARTMENT OF TRANSPORTATION
Martin O'Malley, Governor • Anthony G. Brown, Lt. Governor
James T. Smith, Jr., Secretary • Robert L. Smith, Administrator

TO: All Planholders

FROM: Maryland Transit Administration

SUBJECT: **ADDENDUM NO. 3**
Contract No.: T-1048-0540
Union Ave & Clipper Road Grade Crossing

DATE: August 15, 2013

Enclosed and effective this date is Addendum **No. 3** to the subject Contract. This change **does not** delay the Bid Opening Date of August 28, 2013.

This addendum addresses typos located in Addendum No. 2 advertised on August 14, 2013 containing "Addendum No. 1" in the text of the cover page. It also addresses a typo located on the Modifications List- Sec. II, Item 2-*Notice to Contractors (NTC)*.

The Bidder shall acknowledge receipt of this Addendum by completing and returning this form with the bid package.

All other terms and conditions remain unchanged.

Sincerely,

Joseph Johnson, Procurement Officer
Professional Services/Construction/Installation Section
Procurement Division

Acknowledgement of receipt of ADDENDUM # 3 to Solicitation #T-1048-0540

Vendor Name: _____

_____ _____
Authorized Representative's Signature Date

ADDENDUM NO.: 3
DATE: 08/15/13
CONTRACT NO.: T-1048-0540

The following additions, deletions, and modifications are hereby made a part of the Contract Documents of Light Rail-Union Avenue and Clipper Road Grade Crossing Replacements, Contract No.: T-1048-0540.

Item No.	Page	Modification
I. QUESTION & ANSWERS		
1	Pg. 1of 4	**See Attachment**
II. CONTRACT SPECIFICATIONS		
1	Table of Contents	Corrected 02626 BALLAST to read 02726 BALLAST.
2	**Notice to Contractors (NTC)**	**Bid Due Date changed to August 28, 2013**
3	Bid Form, Pg. BF-4 of 12	Revised Item 035, Graded Aggregate Base quantity to 300 CY.
4	IR 1-28	Liability Insurance Requirements Worksheet Attached
III. SPECIAL PROVISIONS		
1	Section 01500 Pg. 01500-2	Added Paragraph 1.04-A: "FTA Project Signs: The requirements for the FTA project signs are specified in Section SGP-10 of the Supplementary General Provisions."
2	Section 01500 Pg. 01500-8	Deleted Paragraph 4.02-B:
3	Section 02650	Revised header to match section title & number.
4	Section 16647, Pg. 16647-3	Revised Paragraph 3.01-E to delete "as indicated in Figure 1".
5	Section 16647, Pg. 16647-3	Revised Paragraph 3.02-B to delete third bullet item "0 to 100 amperes".
6	Section 16647, Pg. 16647-13	Added Paragraph 3.04-B: "If the test results show that any section of trackwork fails to meet the acceptance criteria, check all instrumentation setups; verify that the equipment is operating properly; inspect the section under test for installation deficiencies; and correct any problems detected, including cleaning of the trackwork to ensure proper data collection. Following this procedure, repeat the tests as soon as possible. If the retesting results in failure to meet acceptance criteria, correct the cause for failure and repeat testing until satisfactory results are obtained."
6	Section 16647, Pg. 16647-13	Revised Paragraph 4.01-B. DELETE last two lines of text beginning with "...which payment shall..." and end sentence one with a period. INSERT: "The Payment

		will be full compensation for all equipment rental costs, testing of cables and related equipment, setup, ddismantling, analysis, and reports."
IV. APPENDIX		
1	Appendix C	Revised – Federal Wage Rates for Construction type: Heavy MD28
2	Appendix I	Revised – Addendum No.2, See Attachment
3	Appendix J	Revised – Addendum No.2, See Attachment
4	Appendix K	Revised – Addendum No2, See Attachment
V. DRAWINGS		
1	Drawing C-01, sheet 5 of 32	Revised ballast and sub-ballast depth.
2	Drawing C-05, sheet 9 of 32	Revised concrete header dimensions, underdrain flow direction and displayed 24" sleeve pipe.
3	Drawing C-06, Sheet 10 of 32	Revised concrete header dimensions.
4	Drawing C-08, sheet 12 of 32	Revised underdrain flow direction.
5	Drawing ES-05, sheet 17 of 32	Revised underdrain flow direction.
6	Drawing TW-01, Sheet 21 of 32	Revised concrete header dimensions.
7	Drawing ST-01, Sheet 23 of 32	Revised concrete header dimensions. Revised grade crossing dimensions.
8	Drawings CD	**Please be advised that there are revised drawings associated with responses to some of the vendors questions, and a copy of the drawings can be obtained by e-mail request via e-mail to: jjohnson14@mta.maryland.gov**

All other conditions of this IFB remain the same.
Also attached are the answers to contractors' questions.

MTA Maryland

MARYLAND TRANSIT ADMINISTRATION

MARYLAND DEPARTMENT OF TRANSPORTATION

Martin O'Malley, Governor • Anthony G. Brown, Lt. Governor

James T. Smith, Jr., Secretary • Robert L. Smith, Administrator

TO: All Planholders

FROM: Maryland Transit Administration

SUBJECT: **ADDENDUM NO. 1**
Contract No.: T-1048-0540
Union Ave & Clipper Road Grade Crossing

DATE: August 14, 2013

Enclosed and effective this date is Addendum No. 1 to the subject Contract. This change does delay the Bid Opening Date August 15, 2013 to August 28, 2013. A conformed copy of the revised specification sections is attached. A list of the changes made to this contract is attached to this Addendum and answers to contractors' questions, if any.

The Bidder shall acknowledge receipt of this Addendum by completing and returning this form with the bid package.

All other terms and conditions remain unchanged.

Sincerely,

Joseph Johnson, Procurement Officer
Professional Services/Construction/Installation Section
Procurement Division

Acknowledgement of receipt of ADDENDUM # 2 to Solicitation #T-1048-0540

Vendor Name: _____

_____ _____

Authorized Representative's Signature Date

PROJECT: T-1048-0540 Light Rail - Union Ave and Clipper Rd Grade Crossings

INVITATION FOR BID - QUESTIONS / RESPONSES - ADDENDUM NO.2

			Responses to Questions
No.	**Contract Documents Reference**	**Question**	**Response to Question**
1		We didn't seem to be able to find the insurance work sheet that is referred to. Could you advise where this work sheet is or could you supply one?	The insurance cost work sheet has been included per this Addendum No. 2
2	Contractor Safety & Health Plan Guidelines	Can the project supervisor also act as the onsite safety officer for the project or is it necessary to have a separate full time safety officer? Is it required that a safety officer must be on site at all times work is going on?	**The Project Supervisor/Manager may NOT serve as the Safety Engineer/Supervisor. The safety officer is required to visit the site daily during construction. It is not required that the safety officer be on site at all times during construction.**
3		On page SGP-26 SGP 7.07 the section on indemnification – this requires the contractor to provide insurance to cover this but this project is an OCIP therefore is this requirement no longer applicable?	**The procject is coved under OCIP.**
4	Spec Section 01500	How many FTA signs will be needed for this project?	**One FTA sign will be required at the construction site.**

PROJECT: T-1048-0540 Light Rail - Union Ave and Clipper Rd Grade Crossings

INVITATION FOR BID - QUESTIONS / RESPONSES - ADDENDUM NO.2

			Responses to Questions
No.	**Contract Documents Reference**	**Question**	**Response to Question**
5		Where are the insulated joints for these signalized crossings? Will we be required to replace any? Provide any new ones? If so what type?	**There are no insulated joints affected by the proposed trackwork. There are no insulated joints included in the scope of work.**
6	Spec Section 01150	Will the contractor have to pay for a MTA flag person if they are fouling the track before or after the outage? If so what is the rate that we will have to pay per hour? Any Truck or other charges? Where does their time start?	**The Contractor is responsible to provide MTA-trained flagmen, watchmen and on-site coordinators as required. MTA will provide the appropriate safety training at no cost to the Contractor. All costs, except the training course, incurred as a result of complying with the Administration's safety requirements will be the sole responsibility of the Contractor.**
7	Spec Section 01150	Do the contractor's employees and the sub contractor's employees all have to attend the MTA Track access safety course? How long is it? Where and when is it given? Is the flagman training part of this course? If not how long is it and must everyone attend?	**All persons who will be working near the MTA Light Rail tracks must take a Railroad Worker Protection (RWP) course. All individuals must take the RWP-1 Flagman/Watchman course. The RWP-2 OSC course is indended for those who will perform the duties of the On Site Coordinator (OSC). Each work crew must have one certified OSC. Each course is approximately 4 hours long and is given at the North Avenue Light Rail Maintenance Facility building. Flagman/Watchman and OSC certification is valid for one year.**
8	Appendix E	MTA already obtained some permits. Could you kindly give us a list of permits already obtained and ones that the contractor will be expected to obtain?	**MDE permits obtained by MTA are shown on Appendix E. All other required permits must be obtained by the Contractor.**
9	Spec Section 01570	If we encounter hazardous waste or contaminated excavation are we correct that this will be considered a changed condition and will be handled as a change order?	**Removal and disposal of any hazardous or contaminated excavation encountered during construction will be paid under Item 003 Miscellaneous Work Allowance.**
10	Drawing C-08 (Sheet 12 of 32)	Where the concrete pipe for the future main is installed, how do you compact the subgrade under the existing duct bank?	**The proposed concrete pipe will cross under the tracks 10 feet north of the existing ductbank hand hole on the north side of Union Avenue (see marked up Drawing No. C-08). The existing surface cable trough can be temporarily supported during installation of the pipe.**
11	Spec Section 02807, Para. 3.03	Specifications call for 12 hours of concrete cure time before allowing traffic over it only leaving 45 hours total to construct both tracks thru Clipper Road and have traffic running by 5:00 am Monday. Would the contractor be able to add accelerants to the high early mix to have a quicker cure time?	**No concrete accelerants are allowed. The Contractor can use other means and methods to achieve the required 12-hour cure time, such as constructing the concrete headers and median in advance of the grade crossing/track construction.**

PROJECT: T-1048-0540 Light Rail - Union Ave and Clipper Rd Grade Crossings

INVITATION FOR BID - QUESTIONS / RESPONSES - ADDENDUM NO.2

			Responses to Questions
No.	**Contract Documents Reference**	**Question**	**Response to Question**
12	Drawings DE-01, DE-02 & DE-03 (Sheets 26, 27 & 28 of 32)	It was explained that the Pedestrian signal was to utilize one of the spare conduits in the existing underground duct bank. There is no wiring or conduit detail on the drawings showing how the signal wiring gets from the center of the tracks to the duct bank. Is there an As-Built of the termination box showing how it is attached to the underground duct bank and what conduit is to be used to get there?	**The contractor is to provide a new 1-1/2 inch concrete encased conduit into the adjacent composite concrete junction box and use the existing conduits and cable trough as a raceway for the power cables for the pedestrian warning signs.**
13	Drawing C-05 (Sheet 9 of 32)	With the termination of the 2 rails at the center of Union Ave. in Phase 1 is MTA aware that the welds to reconnect to Phase 2 will be straight across from one another due to the limited road surface?	**Union Avenue is on a skew to the tracks and the rails can be readily staggered during Stage 1 construction for connection during stage 2 (See marked-up drawing C-05).**
14		Per specifications on the above mentioned project, the insurance requirements and forms will be provided by addendum. In order for me to complete forms, I need the insurance requirement. When can I expect those requirements? For an August 8, 2013 bid date, I will need to get requirements to my insurance company soon.	**The insurance cost work sheet has been included per this Addendum No. 2**
15	Drawings DE-01 & DE-02 (Sheets 26 & 27 of 32)	Drawings DE-01 and DE-02 depict the 1 1/2" dia. PVC conduit for Power Signal Cable going from the signal to base to the end of the concrete foundation. It appears that would tie into the existing quazite box. Please clarify the end location of this conduit as well as the tie-in procedures.	**A 1-1/2 concrete encased conduit will be installed by the contractor to the adjacent composite concrete junction box and the pedestrian warning sign power cables shall be routed thru the existing conduits to the control cabinet. A second 1-1/2 conduit is to be provided in the pole foundation for the ground wire.**
16	Spec Section 16535, Para 3.01	If the conduit does tie into the quazite box, please advise that there will be a signal and power shutdown of all cables within the quazite box.	**MTA will be able to accommodate a temporary removal of power for a short period of time to do this work.**
17	Spec Section 16535. Para 3.01	When the wiring is pulled from the signal to the existing cabinet, please advise that there will be a signal power shutdown in order to work in the case.	**MTA will be able to accommodate a temporary removal of power for a short period of time to do this work.**
18	Appendix C	Appendix C contains the prevailing wages for this project. The wages contained within are for Heavy Dredging. Please provide the correct wages for this project.	**Appendix C has revised - See Attachment, Addendix C**
19	Drawing SG-01 (Sheet 25 of 32)	Sheet 25 note 1 says, not to install DS100 series audible pedestrian signal. The grade crossing will provide audible sound. But plans show 2 sets of RXR speakers. Are those for something other than train approach warning?	**The Pedestrian Warning signal will not be provided with audible capability (the DS100).**

MTA Maryland

PROJECT: T-1048-0540 Light Rail - Union Ave and Clipper Rd Grade Crossings

INVITATION FOR BID - QUESTIONS / RESPONSES - ADDENDUM NO.2

			Responses to Questions
No.	**Contract Documents Reference**	**Question**	**Response to Question**
20		There are 2 gates for Union Ave, but plans only show a single gate for Clipper Access Road. Is this correct?	**Yes. There is a single gate for Clipper Access Road on the west side of the grade crossing.**
21	Spec Section 03410	There are only a minimal number of concrete ties being purchased for this project. Must all the tests called for in the specifications be done for these ties or will certification that the ties meet the requirement from the manufacturer be sufficient?	**Certification from the manufacturer for concrete ties is acceptable.**
22	Spec Sections 02720, 02726 & 05690	The same applies to the rail, ballast and subballast. Will certification be acceptable?	**Mill Certification for rail is acceptable. Certification of gradation for ballast and subballast is acceptable.**
23	Drawing ST-01 (Sheet 23 of 32) and Drawing C-05 (Sheet 9 of 32)	Drawings sheet 23 of 32 shows the west track crossing length as 45'. On sheet 9 of 32 it shows the same crossing as 48' long. Which is correct?	**The length along the N/W track should read 48' and with the number of ties at 33 each. The number of ties in the N/E track should be 31 each. Addendum No. 1 (Drawing ST-01) will include these revisions.**
24	Drawing C-01 (Sheet 5 of 32) and Drawing C-08 (Sheet 12 of 32)	The note on Sheet 5 of 32 (Drawing C-01) Note #8 reads: See DWG C-08 (12 of 32) for section of under drain to be replaced. We did not find any under drain replacement shown on this sheet.	**Underdrain is shown on Drawing C-08 in the top left corner plan with an underdrain schedule in the bottom right of the plan.**
25	Drawing C-01 (Sheet 5 of 32) and Drawing C-08 (Sheet 12 of 32)	Referring to the same two sheets, on Sheet 5 of 32 the subballast thickness is shown as 4" and on Sheet 12 of 32 it is shown as 8" thick. Which is correct?	**The sub-ballast is 8" thick.**
26	Drawing C-01 (Sheet 5 of 32)	On Sheet 5 of 32 no depth of ballast in the crossing area under the ties is shown. What should this be? In the regular ballast section for track outside the crossing it is 12".	**The depth of ballast under the ties is 12" minimum.**

ADDENDUM NO.: 2
DATE: 08/14/13
CONTRACT NO.: T-1048-0540

The following additions, deletions, and modifications are hereby made a part of the Contract Documents of Light Rail-Union Avenue and Clipper Road Grade Crossing Replacements, Contract No.: T-1048-0540.

Item No.	Page	Modification
I. QUESTION & ANSWERS		
1	Pg. 1of 4	**See Attachment**
II. CONTRACT SPECIFICATIONS		
1	Table of Contents	Corrected 02626 BALLAST to read 02726 BALLAST.
2	Notice to Contractors (NTC)	Bid Due Date changed to August 22, 2013
3	Bid Form, Pg. BF-4 of 12	Revised Item 035, Graded Aggregate Base quantity to 300 CY.
4	IR 1-28	Liability Insurance Requirements Worksheet Attached
III. SPECIAL PROVISIONS		
1	Section 01500 Pg. 01500-2	Added Paragraph 1.04-A: "FTA Project Signs: The requirements for the FTA project signs are specified in Section SGP-10 of the Supplementary General Provisions."
2	Section 01500 Pg. 01500-8	Deleted Paragraph 4.02-B:
3	Section 02650	Revised header to match section title & number.
4	Section 16647, Pg. 16647-3	Revised Paragraph 3.01-E to delete "as indicated in Figure 1".
5	Section 16647, Pg. 16647-3	Revised Paragraph 3.02-B to delete third bullet item "0 to 100 amperes".
6	Section 16647, Pg. 16647-13	Added Paragraph 3.04-B: "If the test results show that any section of trackwork fails to meet the acceptance criteria, check all instrumentation setups; verify that the equipment is operating properly; inspect the section under test for installation deficiencies; and correct any problems detected, including cleaning of the trackwork to ensure proper data collection. Following this procedure, repeat the tests as soon as possible. If the retesting results in failure to meet acceptance criteria, correct the cause for failure and repeat testing until satisfactory results are obtained."
6	Section 16647, Pg. 16647-13	Revised Paragraph 4.01-B. DELETE last two lines of text beginning with "…which payment shall…" and end sentence one with a period. INSERT: "The Payment will be full compensation for all equipment rental costs,

		testing of cables and related equipment, setup, ddismantling, analysis, and reports."
IV. APPENDIX		
1	Appendix C	Revised – Federal Wage Rates for Construction type: Heavy MD28
2	Appendix I	Revised – Addendum No.2, See Attachment
3	Appendix J	Revised – Addendum No.2, See Attachment
4	Appendix K	Revised – Addendum No2, See Attachment
V. DRAWINGS		
1	Drawing C-01, sheet 5 of 32	Revised ballast and sub-ballast depth.
2	Drawing C-05, sheet 9 of 32	Revised concrete header dimensions, underdrain flow direction and displayed 24" sleeve pipe.
3	Drawing C-06, Sheet 10 of 32	Revised concrete header dimensions.
4	Drawing C-08, sheet 12 of 32	Revised underdrain flow direction.
5	Drawing ES-05, sheet 17 of 32	Revised underdrain flow direction.
6	Drawing TW-01, Sheet 21 of 32	Revised concrete header dimensions.
7	Drawing ST-01, Sheet 23 of 32	Revised concrete header dimensions. Revised grade crossing dimensions.
8	Drawings CD	**Please be advised that there are revised drawings associated with responses to some of the vendors questions, and a copy of the drawings can be obtained by e-mail request via e-mail to: jjohnson14@mta.maryland.gov**

All other conditions of this IFB remain the same.
Also attached are the answers to contractors' questions.

Union Avenue and Clipper Road Grade Crossing Replacement
CONTRACT NO. T-1048-0540
CONTRACT SPECIFICATIONS BOOK

TABLE OF CONTENTS

DESCRIPTION	PAGE NO.
VENDORS COMMENTS	VC 1
NOTICE TO CONTRACTORS	NTC 1–7
BID FORM INCLUDING UNIT PRICE SCHEDULE	BF 1–12
BID BOND	BB 1– 2
AFFIDAVIT OF INDIVIDUAL SURETY & APPENDIX	AIS 1–5
CONTRACTOR QUESTIONNAIRE	CQ 1–5
BID/PROPOSAL AFFIDAVIT	BPA 1–6
BUY AMERICA CERTIFICATE	BAC 1
CERTIFICATION REGARDING LOBBYING	CRL 1
DBE REQUIREMENTS	DBE 1–9
LIABILITY INSURANCE REQUIREMENTS	IR 1–28
SUBCONTRACTOR UTILIZATION INFORMATION FORM	SUI 1– 2
PAYMENT BY ELECTRONIC FUNDS TRANSFER	EFT 1–3
CONTRACT AGREEMENT	C 1–2
CONTRACT AFFIDAVIT	CA 1–4
SURETY BOND ASSISTANCE PROGRAM	SBAP 1
PAYMENT BOND	PA 1–4
PERFORMANCE BOND	PE 1– 3
BID PROTEST	BP 1
MTA PROJECT SAFETY PLAN	PSP 1–33
CERTIFICATION REGARDING INVESTMENT ACTIVITIES IN IRAN	IRAN 1-2
LOCATION OF THE PERFORMANCE OF SERVICES DISCLOSURE	LPSD 1
MERCURY AFFIDAVIT	MA 1
CONFLICT OF INTEREST AFFIDAVIT	COI 1

TABLE OF CONTENTS - Cont.

DESCRIPTION	PAGE NO.
GENERAL PROVISIONS FOR CONSTRUCTION CONTRACTS (MARYLAND DOT)	GP 1–68
SUPPLEMENTAL GENERAL PROVISIONS FOR CONSTRUCTION CONTRACTS (MTA)	SGP 1– 62

SPECIAL PROVISIONS

01110	SUMMARY OF WORK	SP - 2
01130	CONSTRUCTION PROCEDURES	SP - 10
01150	INTERFACE REQUIREMENTS	SP - 21
01210	MISCELLANEOUS WORK ALLOWANCE	SP - 30
01300	SUBMITTALS	SP - 33
01310	COORDINATION AND MEETINGS	SP - 47
01450	QUALITY ASSURANCE AND QUALITY CONTROL	SP - 50
01500	TEMPORARY FACILITIES AND CONTROLS	SP - 61
01524	ENGINEER'S OFFICE	SP - 69
01550	MAINTENANCE OF TRAFFIC	SP - 70
01570	ENVIRONMENTAL PROTECTION	SP - 80
01600	PRODUCTS	SP - 101
01780	CONTRACT CLOSEOUT	SP - 104
02220	SITE DEMOLITION	SP - 109
02317	EXCAVATION AND FILL	SP -113
02370	EROSION AND SEDIMENTATION CONTROL	SP - 121
02620	SUBDRAINAGE	SP - 126
02650	MISCELLANEOUS STRUCTURES	SP – 131
02720	GRADED AGGREGATE BASE	SP - 135

TABLE OF CONTENTS - Cont.

DESCRIPTION	PAGE NO.
02726 BALLAST	SP - 138
02745 HOT MIX ASPHALT PAVEMENT	SP - 144
02765 PAVEMENT MARKINGS	SP - 152
02770 CONCRETE SIDEWALK	SP - 158
02771 BALLAST CURB	SP - 163
02772 CURB AND GUTTER	SP - 167
02807 REINFORCED CONCRETE PAVEMENT	SP - 172
03050 PORTLAND CEMENT CONCRETE	SP - 176
03210 REINFORCING STEEL	SP - 185
03300 CAST-IN-PLACE CONCRETE	SP - 194
03410 MONOBLOCK CONCRETE TIE	SP - 215
05650 GENERAL REQUIREMENTS FOR TRACK INSTALLATION	SP - 249
05651 RAIL WELDING	SP - 258
05671 BALLASTED TRACK CONSTRUCTION	SP - 269
05680 ELASTOMERIC GRADE CROSSING SYSTEM	SP - 276
05690 115 RE RAIL	SP - 281
16535 LED TRAIN WARNING SIGN	SP - 285
16647 TRACK-TO-EARTH RESISTANCE TESTING	SP - 291
17015 DIRECT BURIED CONDUITS	SP - 309
17251 SIGNALS TESTS AND INSPECTION	SP - 312

TABLE OF CONTENTS - Cont.

APPENDICES

APPENDIX A	LIST OF CONTRACT DRAWINGS	A1
APPENDIX B	SPECIAL DETAILS	B1
APPENDIX C	FEDERAL MINIMUM WAGE RATES	C1
APPENDIX D	BUY AMERICA REQUIREMENTS	D1
APPENDIX E	PERMITS/WAIVERS	E1
APPENDIX F	CONTRACT DATA FEQUIREMENTS LIST (CDRL)	F1
APPENDIX G	SOIL BORINGS	G1
APPENDIX H	STANDARD OPERATING PROCEDURES	H1
APPENDIX I	**TEFLON IMPREGNATED RAIL INSULATOR (TIRI)**	**I1**
APPENDIX J	**LED TRAIN WARNING SING SUPPORT DESCRITION**	**J1**
APPENDIX K	**TEST PIT DATA**	**K1**

TABLE OF CONTENTS

DESCRIPTION		PAGE NO.
BID FORM		1-9
SPECIAL PROVISIONS		
01110	SUMMARY OF WORK	SP-2
01130	CONSTRUCTION PROCEDURES	SP-10
01150	INTERFACE REQUIREMENTS	SP-21
01210	MISCELLANEOUS WORK ALLOWANCE	SP-30
01300	SUBMITTALS	SP-33
01310	COORDINATION AND MEETINGS	SP-47
01450	QUALITY ASSURANCE AND QUALITY CONTROL	SP-50
01500	TEMPORARY FACILITIES AND CONTROLS	SP-61
01524	ENGINEER'S OFFICE	SP-69
01550	MAINTENANCE OF TRAFFIC	SP-70
01570	ENVIRONMENTAL PROTECTION	SP-80
01600	PRODUCTS	SP-101
01780	CONTRACT CLOSE OUT	SP-104
02220	SITE DEMOLITION	SP-109
02317	EXCAVATION AND FILL	SP-113
02370	EROSION AND SEDIMENT CONTROL	SP-121
02620	SUBDRAINAGE	SP-126
02650	MISCELLANEOUS STRUCTURES	SP-131
02720	GRADED AGGREGATE BASE	SP-135
02726	BALLAST	SP-138

TABLE OF CONTENTS

DESCRIPTION		PAGE NO.
02745	HOT MIX ASPHALT PAVEMENT	SP-144
02765	PAVEMENT MARKINGS	SP-152
02770	CONCRETE SIDEWALK	SP-158
02771	BALLAST CURB	SP-163
02772	CURB AND GUTTER	SP-167
02807	REINFORCED CONCRETE PAVEMENT	SP-172
03050	PORTLAND CEMENT CONCRETE	SP-176
03210	REINFORCING STEEL	SP-185
03300	CAST-IN-PLACE CONCRETE	SP-194
03410	MONOBLOCK CONCRETE TIE	SP-215
05650	GENERAL REQUIREMENTS FOR TRACK INSTALLATION	SP-249
05651	RAIL WELDING	SP-258
05671	BALLASTED TRACK CONSTRUCTION	SP-269
05680	ELASTOMERIC GRADE CROSSING SYSTEM	SP-276
05690	115 RE RAIL	SP-281
16535	LED TRAIN WARNING SIGN	SP-285
16647	TRACK-TO-EARTH RESISTANCE TESTING	SP-291
17015	DIRECT BURIED CONDUITS	SP-309
17251	SIGNALS TESTS AND INSPECTION	SP-312

TABLE OF CONTENTS

DESCRIPTION	PAGE NO.
APPENDIX A – LIST OF CONTRACT DRAWINGS	A-1
APPENDIX B – SPECIAL DETAILS	B-1
APPENDIX C – FEDERAL MINIMUM WAGE RATES	C-1
APPENDIX D – BUY AMERICA REQUIREMENTS	D-1
APPENDIX E – PERMITS/WAIVERS	E-1
APPENDIX F – CONTRACT DATA REQUIREMENTS LIST (CDRL)	F-1
APPENDIX H – STANDARD OPERATING PROCEDURES	H-1
APPENDIX I – TEFLON IMPREGNATED RAIL INSULATOR – TECHNICAL REFERENCE (TIRI)	I -1
APPENDIX J – LED TRAIN WARNING SIGN PRODUCT DESCRIPTION	J-1
APPENDIX K – TEST PIT DATA	K-1

END OF TABLE OF CONTENTS

STATE OF MARYLAND DEPARTMENT OF TRANSPORTATION
MARYLAND TRANSIT ADMINISTRATION
NOTICE TO CONTRACTORS

UNION AVENUE AND CLIPPER ROAD
GRADE CROSSING REPLACEMENT
CONTRACT NO.: T-1048-0540 **DATE:** **June 11, 2013**

1. DESCRIPTION OF WORK

A. This project is for the removal and replacement of the existing Light Railroadway grade crossings at Union Avenue and at Clipper Road in Baltimore City. The scope of work includes removal and replacement of the existing rubber grade crossings; installation of a concrete utility sleeve, ADA sidewalk panels and an electrical Train Approaching pedestrian warning sign; maintenance of traffic.

B. Estimated value for this work is in the range of $1,000,000 to $2,500,001

2. DEADLINE FOR QUESTIONS

Questions regarding the work should be directed in writing to Mr. Joseph Johnson at the Administration Offices or via Internet address jjohnson14@mta.maryland.gov. Facsimile messages will not be accepted unless accompanied by telephone notification at (410) 767-3363. Our fax number is (410) 333-4810. Questions directed to this office must be received no later than **July 1, 2013** at the close of the business day. Questions should be submitted on company letterhead. No interpretations other than written shall be binding on the Administration.

3. PRE-BID MEETING & SITE VISIT

A Pre-Bid meeting for the purpose of explaining the Project will be held on **July 24, 2013 at 10:30 a.m.**, local time at the Administration Headquarters, 6 St. Paul Street, 7th Floor Conference Room(s) 731-732, Baltimore, Maryland 21202-1614.

A Site Visit will be held on **July 24, 2013** immediately following the Pre-Bid Meeting.

It is strongly suggested that the person(s) responsible for the preparation of bid documents for bidders attend the Pre-Bid Meeting and the site visit. INSTRUCTIONS CRITICAL TO THE PREPARATION OF THE CONTRACT DOCUMENTS WILL BE PRESENTED AT THE PRE-BID MEETING.

4. BID DUE DATE & TIME

Sealed Bids addressed to the Maryland Transit Administration, Procurement Division, 6 St. Paul Street, 7th Floor, Baltimore, Maryland 21202-1614, and marked "Bid for Contract No. T-1048-0540", will be received at the above address until but not after 2:00 P.M. local time, **August 28, 2013**. At that time, the Bids will be publicly opened and read aloud at a location at the same address. Hand delivered bids should be deposited in the Bid Box located on the 7th Floor before the 2:00 P.M. deadline. Any bids received after the date and time specified shall not be considered.

5. ELECTRONIC VERSION OF BID DOCUMENTS

The bid documents will be available by electronic means. The Bidder acknowledges and accepts full responsibility to ensure that the Bidder has made no changes to the Administration's bid documents. In the event of a conflict between the versions of the bid documents in the bidder's possession and the version maintained by the Procurement Officer, the version maintained by the Procurement Officer shall govern.

6. AVAILABILITY OF DOCUMENTS

Specifications may be downloaded from the MTA web site located at www.mta.maryland.gov. Bidders will be required to register the first time specifications are downloaded and a login number will be assigned. This number should be used every time the bidder downloads the documents for this contract. Bidders must supply accurate information in order to receive notice of all subsequent addenda.

TO OBTAIN THE SPECIFICATIONS: Please visit MTA's website (www.mta.maryland.gov) , follow the links for "Business" – "Procurement" - "Bids/Solicitations", and download the Specifications for this procurement.

TO OBTAIN THE DRAWINGS: e-mail Mr. Joseph Johnson at jjohnson14@mta.maryland.gov requesting the contract drawings and supplying the following information: the contact person, company name, mailing address, phone # and e-mail address. The drawings (CD) will be mailed to you at no cost. You also have the option of picking up the CD containing the drawings at: 6 Saint Paul Street, 7th floor, Baltimore, MD 21202.

7. ADDENDA

Bidders are required to acknowledge all addenda with their bid package. Although the MTA endeavors to send out all addenda to this solicitation in a timely manner, it is the responsibility of the contractors to make sure they received all appropriate documents prior to the bid due date.

8. EMARYLAND MARKETPLACE REGULATIONS

Use of "e-Maryland Marketplace"

"e-Maryland Marketplace" is an electronic commerce system administered by the Maryland Department of General Services.

Registration is free and will provide a means for your business to receive e-mail notifications of upcoming contracting opportunities in specified areas of interest and expertise. This means that all such information is immediately available to subscribers to e-Maryland Marketplace. Because of the instant access afforded by e-Maryland Marketplace, it is recommended that all Bidders interested in doing business with Maryland State agencies subscribe to e-Maryland Marketplace. For more eMM registration information, visit the website: http://ebidmarketplace.com.

9. BID BOND

Each bid exceeding $100,000 must be accompanied by a Bid Bond in the amount of five percent (5%) of the Bid Price. Bid, payment, and performance security may be in the form of: (1) a bond executed by a surety company authorized to do business in the State; (2) a bond executed by an individual surety that meets certain criteria; (3) another form of security required by State or federal law; or (4) another form of security satisfactory to the unit awarding the contract. Sections 13-207, 13-216, 17-104 of the State Finance and Procurement Article, Annotated Code of Maryland.

10. PAYMENT AND PERFORMANCE BONDS

Payment and Performance Bonds in the amount of the Contract Price will be required by the awardee. Upon receiving notification of contract award, the Contractor shall deliver the bond to the MTA no later than the time the Contractor executes the contract. Bid, payment, and performance security may be in the form of: (1) a bond executed by a surety company authorized to do business in the State; (2) a bond executed by an individual surety that meets certain criteria; (3) another form of security required by State or federal law; or (4) another form of security satisfactory to the unit awarding the contract. Sections 13-207, 13-216, 17-104 of the State Finance and Procurement Article, Annotated Code of Maryland.

11. ELECTRONIC FUNDS TRANSFER

On every solicitation for a contract expected to exceed $200,000, the bidder will be required to accept payments by electronic funds transfer (EFT) unless the State Comptroller's Office grants an exemption.

12. DISADVANTAGED BUSINESS ENTERPRISE PROGRAM

A. **DISADVANTAGED BUSINESS ENTERPRISES ARE ENCOURAGED TO RESPOND TO THIS SOLICITATION NOTICE.**

B. The Maryland Transit Administration hereby notifies all bidders that, in regard to any Contract entered into pursuant to this advertisement, Disadvantaged Business Enterprises will be afforded full opportunity to submit Bids in response to this Notice, and will not be subjected to discrimination on the basis of political or religious opinion or affiliation, race color, creed, sex, age or national origin in consideration for an award.

C. It is the goal of the Administration that Disadvantaged Business Enterprises participate in all Contracts. Each Contract will contain goals for Disadvantaged Business Enterprise participation on a contract-to-contract basis. A subcontracting goal of twenty percent (20%) has been established for this procurement. All bidders must submit with their bid a fully executed copy of the Certified DBE Utilization and Fair Solicitation Affidavit (MDOT DBE FORM A) and DBE Participation Schedule (MDOT DBE FORM B). If the bidder fails to submit these completed forms with the bid as required, the procurement officer shall deem the bid non-responsive or shall determine that the offer is not reasonably susceptible of being selected for award. ALL DBE FIRMS MUST BE CERTIFIED BY THE MARYLAND DEPARTMENT OF TRANSPORTATION. NO OTHER CERTIFICATIONS WILL BE ACCEPTED.

D. **A contractor may count toward its DBE goal 60 percent of its expenditures for materials and supplies required under the contract and obtained from a DBE regular dealer, and 100 percent of such expenditures to a DBE manufacturer. The DBE credited supplies may not exceed 60 percent of the entire contract goal.**

E. New versions of Sections 13-103, 13-104 and 14-303 of the State Finance and Procurement Article of the Maryland Code, relating to increased bid/proposal documentation of DBE commitments, are effective as of October 1, 2004. The Contract under this solicitation will be awarded in accordance with these new requirements. As a result, new bid submission requirements, including certain revised DBE documents, are in effect for this solicitation. These new requirements are set forth elsewhere in this solicitation.

F. As a result of the revisions to Sections 13-103, 13-104 and 14-303, certain existing portions of the Code of Maryland Regulations (COMAR) relating to post bid/proposal submission of DBE subcontractors are inconsistent with the revised statute. To the extent the provisions of COMAR relating to post bid identification of DBE subcontractors are inconsistent with the requirements of this solicitation, the requirements of this solicitation shall control the award of a Contract. Questions or concerns regarding the DBE requirements

of this solicitation must be raised prior to the opening of bids or receipt of initial proposals

G. Effective on October 1, 2009, Minority Business Enterprise (MBE) firms may elect to be dually certification as woman-owned businesses and as members of an ethnic or racial category. For purposes of achieving any gender or ethnic/racial MBE participation subgoals in a particular contract, an MBE firm that has dual certification may participate in the contract either as a woman-owned business or as a business owned by a member of a racial or ethnic minority group, **but not both**.

WARNING – PLEASE READ:

- **A firm must be listed in the MDOT MBE/DBE Directory with the gender category in order to be used to meet the gender subgoal.**
- **A firm must be listed in the MDOT MBE/DBE Directory with an ethnic/racial category in order to be used to meet the ethnic/racial subgoal.**
- **A firm must be listed in the MDOT MBE/DBE Directory with both the gender and ethnic/racial categories in order for a contractor to have the option of selecting which of those categories it will use for the firm on a State contract.**
- **Contractors should designate whether the MBE firm will be used as a woman-owned business or as a business owned by a member of a racial/ethnic group before calculating the percentage of MBE participation goals and subgoals they intend to meet.**

Maryland's MBE/DBE Directory will reflect the dual certification status beginning October 1, 2009. You can access the MBE/DBE Directory at http://mbe.mdot.state.md.us. Firms with dual certification will now be listed as follows:

Example:
ABC Corporation, Inc.
123 Corporate Circle
Hanover, MD 21076
Female/African American
00-000

13. AFFIRMATIVE ACTION REQUIREMENTS

Bidders on this Work will be required to comply with MTA Affirmative Action Requirements and all applicable Equal Employment Opportunity Laws and Regulations.

14. FEDERAL FUNDING

Any contract resulting from bids submitted is subject to a Financial Assistance

Contract between the Administration and the U.S. Department of Transportation. Federal funds will be used to finance 80% of the cost of this contract.

15. SUSPENSION AND DEBARMENT CERTIFICATION

All bidders will be required to certify that they are not on the GSA List of Parties Excluded from Procurement and the List of Contractors Suspended or Debarred from Contracting with the State of Maryland. All bidders must also be in good standing with the State Assessment & Taxation Department.

16. CONTRACTOR'S QUESTIONNAIRE

All Bidders shall submit a fully executed copy the Contractor's Questionnaire Pre-Award Evaluation Data Form with the bid package.

17. INSURANCE REQUIREMENTS

The Administration has chosen to provide Workers' Compensation, General Liability, Excess Liability, Builders Risk, Pollution Liability and Railroad Protective coverage on behalf of Contractors and subcontractors working on this project. This approach to project insurance is commonly called a wrap-up or owner controlled insurance program (OCIP). Specific information regarding Liability Insurance Requirements is contained in the Contract Specifications.

Please note that an Insurance Cost Worksheet must be included with each bid package.

18. USE OF BIDDER'S OWN FORCES

The bidder with his own forces shall perform not less than fifty percent (50%) of the work at the project site.

19. BUY AMERICA REQUIREMENTS

This contract is subject to Section 165, "Buy America", of the Surface Transportation Assistant Act of 1982, U.S. Public Law 197-424, and regulations and/or guidance implementing this statutory provision issued by the Federal Transit Administration of the U.S. Department of Transportation. The contract is further subject to the Buy American Steel requirements of Chapter 02 of subtitle 11 of the Code of Maryland Regulations, Title 21, State Procurement Regulations.

20. CANCELLATION OR REJECTION OF BIDS

Notice to Contractors may be canceled in accordance with State Procurement Regulations.

The Administration reserves the right to reject any and all bids and/or waive

technical defects if, in its judgment, the interests of the Administration so require.

21. CERTIFICATION REGARDING INVESTMENT ACTIVITIES IN IRAN

All bidders will be required to certify that they are not on the list created by the Board of Public Works as a person engaging in investment activities in Iran as described in §17-702 of State Finance & Procurement; and is not engaging in investment activities in Iran as described in State Finance & Procurement Article, §17-702.

22. LOCATION OF THE PERFORMANCE OF SERVICES DISCLOSURE

All bidders will be required to disclose the location of the performance of services pursuant to Md. Ann. Code, State Finance and Procurement Article, § 12-111, and in conjunction with the bid submitted in response to this IFB.

23. MERCURY AFFIDAVIT

Bidders are required to complete the Mercury Affidavit in its entirety.

24. CONFLICT OF INTEREST AFFIDAVIT

Bidders are required to complete the Conflict of Interest Affidavit in its entirety.

Item	Section	Description	Estimate of Quantity	Unit	Unit Price	Total Price
001	01130	Mobilization	1	LS		
002	01130	Construction Surveying	1	LS		
003	01210	Miscellaneous Work Allowance	Allowance			$ 120,000.00
004	01450	Quality Assurance and Quality Control	Allowance			$ 25,000.00
005	01524	Engineer's Office	Allowance			$20,000.00
006	01550	Maintenance of Traffic	1	LS		
007	01550	Temporary Traffic Signs	350	SF		
008	01550	Reset Temporary Traffic Signs	20	EA		
009	01550	Temporary Drums for MOT	60	EA		
010	01550	Removable Preformed Pavement Line Markings	50	LF		

Item	Section	Description	Estimate of Quantity	Unit	Unit Price	Total Price
011	01550	Removal of Pavement Markings	50	LF		
012	01550	Temporary Orange Construction Fence	500	LF		
013	01550	Type III Barricade	4	EA		
014	01550	Portable Variable Message Sign	50	UD		
015	01550	Aggregate for Maintenance of Traffic	10	TON		
016	01550	Hot Mix Asphalt for Maintenance of Traffic	10	TON		
017	02220	Removal of Existing Rubber Grade Crossing	1970	SF		
018	02220	Removal of Existing Ballasted Track	480	TF		
019	02220	Removal of Existing Pavement	460	SF		
020	02220	Saw Cutting	210	LF		

Item	Section	Description	Estimate of Quantity	Unit	Unit Price	Total Price
021	02317	Excavation	100	CY		
022	02317	Rock Excavation (Contingent)	10	CY		
023	02317	Removal Of Unsuitable Material	50	CY		
024	02317	Select Borrow	50	CY		
025	02317	Test Pit Excavation	20	CY		
026	02370	Erosion and Sediment Control	1	LS		
027	02370	Stabilized Construction Entrance	1	EA		
028	02370	Silt Fence	50	LF		
029	02370	At Grade Inlet Protection	3	EA		
030	02370	Topsoil, 4-inch Depth	300	SY		

Item	Section	Description	Estimate of Quantity	Unit	Unit Price	Total Price
031	02370	Seeding & Mulching	300	SY		
032	02370	Limit of Disturbance (LOD) Markers	500	LF		
033	02620	8-Inch PVC Perforated Pipe	50	LF		
034	02650	24" RCCP Class V Pipe Sleeve	48	LF		
035	**02720**	**Graded Aggregate Base**	**300**	**CY**		
036	02745	Milling Existing HMA Pavement – 2-Inch Depth	260	SY		
037	02745	Hot Mix Asphalt (HMA) Pavement	30	TON		
038	02765	5-Inch Wide White Thermoplastic Line	250	LF		
039	02765	24-Inch Wide White Thermoplastic Line	40	LF		
040	02770	Detectable Warning Surface	30	SF		

Item	Section	Description	Estimate of Quantity	Unit	Unit Price	Total Price
041	02771	Type A Ballast Curb	120	LF		
042	02772	Baltimore City Std. Comb. Curb & Gutter Type A	30	LF		
043	02807	Reinforced Concrete Pavement – 8" Thick	150	SY		
044	05671	Ballasted Track Construction	480	TF		
045	05680	Elastomeric Grade Crossing System	250	TF		
046	16535	LED Train Warning Sign	1	LS		
047	16647	Track-To-Earth Resistance Testing	1	LS		
048	16647	Rail to Rail Resistance Testing	1	LS		
049	17015	4-inch PVC Conduit, Schedule 80	285	LF		
050	17251	Signals Testing and Inspection	1	LS		

Basis of Award: Total amount of items 001 thru 050 (Figures)

_____

(Words)

051		Insurance Premium (Contingency)		LS		

This amount will only be added to the base bid in the event that the bidder is excluded from the wrap-up insurance program or the program is terminated mid-term. The Insurance Premium Worksheet must be attached to the bid.

LIABILITY INSURANCE REQUIREMENTS FORMS

This attachment will be provided per an addendum.

LIABILITY INSURANCE REQUIREMENTS

MARYLAND TRANSIT ADMINISTRATION (MTA) will utilize an Owner Controlled Insurance Program (OCIP) for this construction project.

What is an OCIP?

The MTA OCIP will provide General Liability, Workers' Compensation, and Excess Liability coverage for contractors and subcontractors while performing Work on the project site. The Work specified in your Bid Request qualifies for the OCIP, therefore, General Liability, Workers' Compensation, and Excess Liability will be purchased on your behalf, for this Work. However, you must continue to purchase General Liability, Automobile Liability and Workers' Compensation, and Excess Liability for Work performed *away from* the Project site.

A Builder's Risk insurance policy will also be provided for the benefit of the OCIP participants. You need not provide such insurance, as the interest of all parties in the Work will be covered by this policy. Such insurance will NOT cover your own tools and equipment.

Enclosed herein as Exhibit B – Indemnities and Insurance is detailed information about this program.

Bids:

Because General Liability, Workers' Compensation, and Excess Liability coverage will be provided by the OCIP, you will need to bid all Work with insurance costs for General Liability, Workers' Compensation, and Excess Liability separately identified as an add/alternate to your bid price. The cost should be separated by line of insurance utilizing the Insurance Cost Worksheet provided in the Bid Form package and as Exhibit A of this form. This form must be submitted as part of your bid package. For your information, the forms that will need to be completed by the successful bidder as part of the contract package are included herein as Exhibit C.

It is important that these insurance costs be as accurate as possible, as they have a direct bearing on the competitiveness of your bid.

If in doubt, your insurance agent should be able to give you the insurance cost for Work to be done at the site. To enable him to calculate that cost, you should be prepared to give your agent your payrolls (by workers' compensation class code) for Work to be performed on this Project.

Safety:

A critical part of any construction project is job site safety. An OCIP program is designed to standardize safety procedures to enhance your safety efforts. Representatives

of AIG, the OCIP insurer, the Construction Manager, and Aon Risk Services, Inc. of MD will be available to assist you in these efforts. You will be expected to comply with the safety requirements established by MTA and the Construction Manager in conjunction with the OCIP carrier. The Maryland Transit Administration Project Safety Plan is included in the Contract Specification Book as Form PSP.

Claims:

A claims representative will assist you in reporting any claims. You will be given an insurance manual that will identify the basic information necessary to report a claim. The forms and instructions contained in the manual should not be significantly different from those you are currently using.

Contractor Provided Insurance:

Because an OCIP is limited to Work performed at a specific location (except as provided by the Builder's Risk), you will be required to provide General Liability, Workers' Compensation, and Property insurance, if applicable, for any activities away from the project site, or performed for someone other than MTA.

You will also need to continue other coverages, such as:

⇒ Automobile liability and physical damage

⇒ Inland Marine coverage for your tools and equipment

⇒ Umbrella/Excess liability for limits over the maximum limit to be provided by MTA (limit to be advised)

⇒ Any other coverage you elect to continue

Alternate program option:

MTA reserves the option **not** to utilize an OCIP program for this project or to discontinue it. In such a case, you and any subcontractors will be expected to provide insurance coverages as required by the contract at a cost commensurate with the insurance deductions in your original bids.

Summary of Owner Provided Insurance
Workers Compensation

Coverage A - Statutory Limits

Coverage B - Employers Liability

$2,000,000 Bodily Injury by Accident

$2,000,000 Bodily Injury by Disease

$2,000,000 Policy Limit by Disease

Commercial General Liability

The policy includes Completed Operations Coverage for a period of 10 years after acceptance of the work by Owner with a limit of liability of $2,000,000 each occurrence/$4,000,000 general aggregate for Bodily Injury/Property Damage.

Excess Liability

$50,000,000 each occurrence
$50,000,000 aggregate

Builder's Risk Insurance:

Loss Limit (Total Liability per Occurrence):	$	50,000,000
Sub limits:		
Building Ordinance or Law (Coverages A, B & C Combined)	$	2,500,000
Debris Removal per Occurrence	$	2,500,000
Delay in Completion/Soft Costs	$	TBD
Loss Adjustment Expenses	$	100,000
Expediting Expenses per Occurrence	$	100,000
Fire Department Service Charges per Occurrence	$	50,000
Inland Transit	$	500,.000
Offsite Temporary Storage per Occurrence	$	1,000,000
Physical Damage per Occurrence	$	50,000,000
Valuable Papers and Records	$	100,000
Pollution Cleanup	$	10,000
Trees, Shrubs, Plants and Landscaping per Occ (Named Perils Only)	$	25,000
Annual Aggregate Limits of Liability:		
Earthquake	$	50,000,000
Flood (Depending on Flood Zones)	$	50,000,000

The Owner will purchase for the benefit of all Approved Contractors, Subcontractors and Vendors, all-risk Builder's Risk insurance in the amounts sufficient to cover replacement cost of the work in progress and the property located at the Project Site. Such insurance will specifically protect the interest of the Contractor in the Work, but **it will not cover Contractor's equipment, which will <u>not</u> become a permanent part of the Work to be accepted by the Owner**.

Notwithstanding the contractor's deductible responsibilities as stated in Section I, Exhibit D, Contractor's total liability for loss of or damage to the Work shall be limited to the recoveries from the Owner-provided Builder's Risk Insurance".

EXHIBIT A

INSURANCE COST WORKSHEET

AND

INSTRUCTIONS FOR COMPLETING INSURANCE COST WORKSHEET

Error! Objects cannot be created from editing field codes.Form-1a

Insurance Cost Worksheet

(Fixed Price Type Contracts)

Numbers reference attached instructions

MTA OCIP

A. Contractor Information:

Federal ID # or Soc. Sec. #: 1

	Business Information (headquarters)	Contact Information (address questions to..)
Company Name & dba:	2	3
Contact Name & Title:		
Address:		
City, State, Zip Code:		
Telephone:		
Fax:		
E.mail Address:		

B. BID INFORMATION:

Bid Package No.: 1

Description of Work: 2

Proposed Contract Price $: 3

Are you Submitting a bid to MTA: 5 ❑ Yes ❑ No

Amount of Self Performed Work $: 4

If No, identify to whom: 6

C. Workers Compensation Insurance Information for Work Described Above: (a) (attach a separate sheet if necessary)

a State	b Class Code	C Description	d Rate (per $100 payroll)	e Man-hours	f Payroll	G WC Premium (Payroll * Rate / 100)
1						
Totals				2	3	4

Identify the Amount of Your Claim Retention 5

Your Company's Workers Compensation Experience Modifier: 6

Modified Premium (line C4 x C6): 7

Employers Liability Rate: 8

Employers Liability Premium: 9

10 Modification & Discount Premium Factors		11 Rate	12 Amount
Mod 1:	+ or -		
Mod 2:	+ or -		
Mod 3:	+ or -		
Mod 4:	+ or -		
Mod 5:	+ or -		

Total Modification Amount (Total of all amounts entered in column C12): 13

Total Workers Compensation Premium (line C7 + C9 + C13): 14

D. General Liability: (a)

Rate: 1

2 Based On: ❑ Total Payroll (C3) ❑ Contract Price (B3) ❑ Other

3 Rate factor: ❑ Per 100 ❑ Per 1,000

4 Identify the Amount of Your Claim Retention:

GL Premium (D2 x D1 ÷ D3): 5

Excess/Umbrella Liability: (a)

Rate: 6

7 Based On: ❑ Total Payroll (C3) ❑ Contract Price (B3) ❑ Other

8 Rate factor: ❑ Per 100 ❑ Per 1,000

Excess/Umbrella Premium (D7 x D6 ÷ D8): 9

E. Builder's Risk/Installation Floater: (1)

Rate: 1

2 Rate factor ❑ Per 100 ❑ Per 1,000

Builder's Risk/Installation Floater Premium (B3 x E1 ÷ E2): 3

F. Other Insurance Premiums: (1) (Enter total premium costs identified on page 2)

1

G. Totals

Total of all Insurance Premiums (Total of lines C14 + D5 + D9 + E3 + F1): 1

Overhead & Profit on Insurance Prem. %: 2 15%

O/H & Profit Amount (G1 x G2): 3

Total Initial Insurance Cost (Total of lines G1 + G3): 4

Contractor's Initial Insurance Cost Rate (Line G4 divided by total payroll in line C3 x 100): 5

H. Signature Block :

I verify the information presented above and attachments are correct:

Name: (please print)

Date:

Title:

Signature:

Completion of this form is a required part of your bid and must accompany your bid documents. Complete a separate form for each contractor, known subcontractor(s) and trades not currently awarded to a subcontractor. Duplicate this form as needed.

(a) **Please provide copies of the following documents to support your insurance cost calculations:**

☑ Workers Compensation declaration and rate pages
☑ Experience Modification worksheet
☑ Umbrella/Excess Liability declaration and rate pages
☑ 5 years actual loss experience for each line of coverage in which Contractor retains more than $5,000.

Error! Objects cannot be created from editing field codes. Form-1a

INSURANCE COST WORKSHEET

(Instructions for Fixed Price Type Contracts)

MTA OCIP

Complete a separate form for each contractor, known subcontractor and trade not currently awarded to a subcontractor. Duplicate this form as needed. **Completion of this form is a required part of your bid and must accompany your bid documents.**

A. Contractor Information

1 Enter your company's Federal ID number. This number can be found on filings made to the federal government such as your tax return.
2 Enter your company's name, mailing address and phone/fax number for your company's main office location in the space provided below.
3 Enter the name of the person Aon should contact if questions arise. Include the mailing address, phone/fax and e.mail address if different than A-2

B. Bid Information

1 Enter the Bid Package Number, Contract Number or Purchase Order Number that was included in Maryland Transit Administration's originating documentation.
2 Provide a brief description of the work you will be performing at the project site.
3 Identify the total amount of your bid. Include both labor and material.
4 Identify the amount of work that you anticipate will be self-performed. Include both labor and material.
5 Check the appropriate box that identifies if you contract directly with Maryland Transit Administration's or are a subcontractor.
6 If you are a Subcontractor, identify the entity with whom you are under contract.

C. Workers Compensation Insurance Information *(Duplicate or attach additional sheets if necessary. You may create an electronic version of this document if all requested information is included):*

1 a Enter the two-letter abbreviation for the state in which the work will be performed.
b Enter each Workers Compensation class code that applies to your work identified in B2. *(Most states use a 4 digit Number)*
c Enter the Workers Compensation class code description that applies to each class code identified in C1b.
d Enter the Workers Compensation rate that applies to the specified class code.
e Enter the estimated Man-hours required to complete the described work for each Workers Compensation class code.
F Enter the estimated Payroll required to complete your work. Use only unburdened payroll and exclude the premium portion of any overtime pay.
G Calculate the WC Premium by multiplying the Payroll (C1f) by the Rate (C1d) and dividing the result by 100. Repeat this calculation for each WC class code.
2 Total the estimated Man-hours for each class code. Be sure to include information from additional pages if used.
3 Total the estimated Payroll for each class code. Be sure to include information from additional pages if used.
4 Total the Workers Compensation Premium for each class code. Be sure to include information from additional pages if used.
5 Enter the amount of the Claim Retention / Deductible your company has on their existing Workers Compensation.
6 Enter your WC Experience Modifier. This Information can be located on your Workers Compensation policy or on your NCCI Bureau Rating Sheet.
7 Calculate the Modified Premium by multiplying the WC Premium (C4) by the Experience Modifier (C6).
8 Enter your Employer's Liability Insurance Rate. This information can be found in your Workers Compensation policy.
9 Calculate your Employer's Liability Premium by multiplying the Modified Premium (C7) by the Employer's Lia. Rate (C8).
10 Identify the Modifiers that apply to your Workers Compensation Premium. This information can be located on your Workers Compensation Policy.
11 Enter the Rate for each identified Modifier. The information can be located on your Workers Compensation Policy
12 Calculate the Modified Premium Factor Amount by multiplying the Modified Premium (C7) by the Modified Premium Rate (C11) and dividing by 100. Be sure to identify if the Modification factor is an addition or reduction to your premium.
13 Total the Modified Premium Amounts by adding the numbers in column C12.
14 Calculate the Total Workers Compensation Premium by adding the Modified Premium (C7) to the Employer's Lia. Premium (C9) and adding the Premium Modifications (C12).

D. General Liability & Umbrella/Excess Liability Insurance

1 Enter the General Liability Rate. This number can be found on your General Liability Policy
2 Identify the base the General Liability Rate applies to. If the base is other than Payroll or Revenue, enter the amount and the description in the space provided.
3 Identify the General Liability Rate factor by marking the box.
4 Identify the amount of your Claim Retention.
5 Calculate the General Liability Premium by multiplying the Bases (D2) by the Rate (D1) and dividing by the factor (D3).
6 Enter the Excess/Umbrella Liability Rate. This number can be found on your Excess/Umbrella Liability Policy
7 Identify the base the Excess/Umb. Liability Rate applies to. If the base is other than Payroll or Revenue, enter the amount and description in the space provided.
8 Identify the Excess/Umbrella Liability Rate factor by marking the box.
9 Calculate the Excess/Umbrella Liability Premium by multiplying the Bases (D7) by the Rate (D6) and dividing by the factor (100 or 1,000).

E. Builder's Risk/Installation Floater

1 Enter the Builder's Risk/Installation Floater Rate. Locate this information on your Property Policy or Builder's Risk Policy.
2 Identify the base factor that it applies to (100 or 1,000).
3 Calculate the Premium by multiplying the Proposed Contract Price (B3) by the Rate (E1) and dividing it by the Factor (E2).

F. Other Insurance Premiums

1 For each of the Insurance Lines of Coverage identified below, Identify the Rate, Base and Factor. Calculate the Premium by multiplying the Base x Rate ÷ Factor. Total the Other Insurance Premiums in the space provided and carry that amount to the front page.

Line of Coverage	Rate	Base	Factor	Premium	Total Premium

G. Totals

1 Calculate the Total of all Insurance Premium by adding Workers Compensation (C14), General Liability (D5), Excess/Umbrella Liability (D9), Builder's Risk/Installation Floater (E3), and Other Insurance Premiums (F1).
2 Identify the Overhead & Profit Percentage that was applied to this project during the tabulation of the Proposed Contract Price.
3 Calculate the Overhead & Profit Amount by Multiplying the Total of all Insurance Costs (G1) by the Overhead & Profit Percentage (G2).
4 Calculate the Total Initial Insurance Cost by adding the Overhead & Profit Amount (G3) with the Total of all Insurance Premium (G1)
5 Calculate your rate by Dividing the Total Initial Insurance Cost (G4) by the Estimated Payroll (C3) and multiplying by 100.

H. Signature Block: This form must be signed by a representative of your company with the authority to verify the information is correct.

Note: Please provide copies of the following documents as part of your submittal:

- ☑ Schedule of Values
- ☑ Workers Compensation declaration and rate pages
- ☑ Experience Modification worksheet
- ☑ General Liability declaration and rate pages
- ☑ Umbrella/Excess Liability declaration and rate pages
- ☑ 5 years actual loss experience for each line of coverage in which Contractor retains more than $5,000.

EXHIBIT B

INDEMNITIES AND INSURANCE

Indemnities and Insurance

1.1 Indemnities.

1.1.1 To the fullest extent permitted by law, Contractor shall indemnify, defend (at Owner's request and through counsel reasonably acceptable to Owner) and hold harmless Owner from and against all claims, demands, causes of action, damages, liabilities, losses and expenses, including attorneys' and consultants' fees and expenses (collectively, "Claims"), arising out of or resulting from performance of Work, provided such Claims are attributable to bodily injury, sickness or death, or injury to or destruction of tangible property, or infringement of any patents, copyrights, trademarks, trade secrets or other intellectual property right; provided that such Claims are caused in whole or in part by the active or passive negligence or willful misconduct of Construction Manager, contractors, and subcontractors. With respect to Claims made after the expiration of the Completed Operations coverage of the Project Commercial General Liability Insurance procured by Owner at its expense under Paragraph 1.3.2(b), the foregoing indemnity shall apply only to the extent of the active negligence or willful misconduct of the Contractors, and/or subcontractors.

1.1.2 The foregoing indemnity shall apply regardless of whether such claim, demand, cause of action, damage, liability, loss or expense is caused in part by the active or passive negligence of an Indemnity, and regardless of whether liability without fault is imposed or sought to be imposed on an Indemnity, but shall not extend to claims, demands, causes of action, damages, liabilities, losses or expenses to the extent they result from the sole negligence or willful misconduct of such Indemnity. Nothing herein shall be deemed to abridge the rights, if any, of Owner or Contractor to seek contribution from other parties where appropriate.

1.1.3 With respect to claims against any person or entity indemnified under Paragraph 1.1.1 by an employee of the Contractor, or subcontractor, or anyone directly or indirectly employed by any of them or for whose acts any of them may be liable, the indemnification obligation under Paragraph 1.1.1 shall not be limited by a limitation on amount or type of damages, compensation or benefits payable under workers' compensation acts, disability benefit acts or other employee benefit acts.

1.1.4 Neither Contractor nor subcontractor, of any tier, shall place or release, or cause to be placed or released, any Hazardous Materials in, on or under the Project Site, or into any adjacent or nearby watercourse, body of water or wetlands, except in strict compliance with all applicable Laws and Permits. Contractor shall be responsible for any Hazardous Materials deposited, released or disposed of in, on or under the Project Site or into any adjacent or nearby watercourse, body of water or wetlands on or after the date of the Notice to Proceed by any of the foregoing persons (excluding Indemnitees) only, including if necessary any cleanup or remediation activities, and shall indemnify and hold harmless the Indemnitees from and against any claims, liabilities (including under CERCLA), damages, losses and expenses (including reasonably and actually incurred attorneys' fees) arising out of or resulting from the deposit, release or disposal of any

Hazardous Materials in, on or under the Project Site or into any adjacent or nearby watercourse, body of water or wetlands on or after the date of the Notice to Proceed by any of the foregoing persons (excluding Indemnitees) only, except to the extent caused by negligence or willful misconduct on the part of the applicable Indemnity.

1.1.5 Owner shall indemnify, defend and hold harmless Contractor, and subcontractors, and their officers, directors, employees and agents, from and against any claims, liabilities, damages, losses and expenses (including reasonably and actually incurred attorneys' fees) resulting from such indemnified party's being deemed an owner or operator of the Project Site, or a generator, storer or treater of Hazardous Materials existing at the Project Site as of the date of the Notice to Proceed, for purposes of any Laws and Permits relating to Hazardous Materials or any investigatory or remedial actions by any government authorities having jurisdiction over the Project or the Project Site; provided, however that this indemnity shall not apply to the extent of the actual negligence or willful misconduct of an indemnified party. Without limitation, such indemnity shall include any liability of the indemnified parties under the Comprehensive Environmental Response Compensation and Liability Act (including the SARA amendments thereto), and any liability of the indemnified parties resulting from actions by any state or local agency.

1.1.6 If any claim of Lien, stop notice, equitable lien or any other demand for payment or security, including claims or demand upon surety bonds for any of the Work, is made or filed with Owner, Owner's property or the Project by any person claiming that Contractor, subcontractor, or any other person claiming under any of them (other than Owner) has failed to perform its contractual obligations or to make payment for any obligation incurred for or in connection with the Work, then Owner shall have the right to retain from any payment then due or thereafter to become due Contractor or to be reimbursed by Contractor an amount sufficient to (i) satisfy, discharge and defend against any such claim or lien, stop notice or other demand, unless Contractor files surety bonds fully releasing the Owner and Owner's property from such claim or lien under applicable law, in which case Owner shall not make any such retention; (ii) remedy any such nonpayment, nonperformance; and (iii) compensate the Owner for and indemnify it against any and all claim, liability, damage, loss, and expense (including reasonably and actually incurred attorneys' and consultants' fees) sustained or incurred in connection therewith.

1.2 Insurance Provided by Contractor

1.2.1 Contractor shall provide, pay for and maintain (and as appropriate, shall require contractors and subcontractors of all tiers to provide, pay for and maintain) insurance of the type and in the limits as set forth below. Contractor shall maintain such insurance from the commencement of Work on the Project Site until Final Acceptance of the entire Project or the completion of all post-acceptance warranty or related work by Contractor or the applicable subcontractor.

1.2.2 Automobile Liability insurance covering all owned, non-owned, and hired

vehicles used by Contractor or the applicable contractor or subcontractor for all operations both on and off the Project Site, with a minimum limit of $2,000,000 combined single limit per accident for Bodily Injury and Property Damage. The policy shall include a waiver of subrogation with respect the Administration. Loading and unloading of any motor vehicle must be covered by endorsement to the automobile liability policy or policies.

Pollution liability coverage at least as broad as that provided under the ISO pollution liability - broadened coverage for covered autos endorsement (CA 99-48) shall be provided, and the Motor Carrier Act endorsement (MCS 90) shall be attached.

1.2.3 Workers' Compensation insurance for statutory benefits limits of the applicable Labor Code(s) and Workers' Compensation law(s) and Coverage B - Employer's Liability with minimum limits of $500,000. each accident for Bodily Injury by accident, $500,000 each employee for Bodily Injury by disease, and $500,000 policy limit for Bodily Injury by disease. Such insurance shall be endorsed to include Longshore and Harbor Workers' Compensation Act Coverage and Jones Act Coverage if applicable, and shall cover all operations of Contractor or the applicable subcontractor <u>except</u> those insured under the OCIP as described in Paragraph 1.3.2. Such insurance shall be endorsed to include Other States Coverage and to include a Waiver of Our Right to Recover from Others Endorsement in favor of the Indemnitees.

(a) If Contractor or the applicable subcontractor is a qualified Workers' Compensation self-insurer, prior to its commencement of Work at the Project Site Contractor shall submit to Owner a copy of such employer's current Certificate of Permission to Self-Insure.

(b) Contractor shall include, and shall require each of its subcontractors to include, the following provision in all subcontracts let by such party for performance of Work when the party performing Work under such subcontract is a qualified, approved self-insurer of Workers' Compensation:

> "The subcontractor waives any right of recovery the subcontractor may have or acquire against the Indemnitees, Contractor or subcontractors of all tiers by reason of the subcontractor's having paid Workers' Compensation benefits as a self-insurer."

1.2.4 Commercial General Liability insurance covering all operations of Contractor or the applicable subcontractor <u>except</u> those insured under the OCIP as described in Paragraph 1.3.2. Such insurance shall be written on an occurrence form; coverage cannot be provided under a "Claims-Made" or "Modified Occurrence" policy without the prior, express written consent of Owner. Such insurance shall be no less comprehensive and no more restrictive than the coverage provided by the standard Insurance Services Office (ISO) form CG 00 01 10 93; shall include by its terms or appropriate endorsements Bodily Injury, Property Damage, Personal Injury, Blanket

Contractual, Independent Contractors, Products and Completed Operations coverages; shall include Products Liability coverage for any products manufactured, assembled, or otherwise worked upon away from the Project Site; and shall include coverage for "x" (explosion), "c" (collapse), or "u" (underground) exposures. Such insurance shall have the following minimum limits:

(a) For the Contractor:

$2,000,000 Each Occurrence;
$2,000,000 General Aggregate; and
$2,000,000 Products/Completed Operations Aggregate

(b) For all subcontractors:

$2,000,000 Each Occurrence;
$2,000,000 General Aggregate; and
$2,000,000 Products/Completed Operations Aggregate

1.2.5. Professional Liability insurance if Contractor or applicable subcontractors will perform or retain others to perform professional services in connection with the Work, including engineering, architectural, medical, testing, environmental assessment or remediation, or design-build services, with a minimum limit of $2,000,000 per wrongful act, error, or omission, and a minimum annual aggregate limit of $4,000,000.

1.2.6. Umbrella Liability: Provide an occurrence "umbrella" form of excess liability insurance containing coverage no more restrictive than that required in the underlying policies specified above. The required primary insurance shall be listed as underlying coverage in the first layer umbrella policy. The umbrella policies shall contain a minimum occurrence and aggregate limit of $5,000,000.

The insurance coverages specified in Paragraphs 1.2.2, 1.2.3, 1.2.4, and may be arranged under single policies for the full limits required or by a combination of underlying policies with the balance provided by Umbrella Liability insurance 1.2.6. The Umbrella Liability insurance shall provide coverage following the form of and as broad as that of the underlying primary policies.

1.2.7 The Indemnitees defined in Article 1.1.1 shall be included as Additional Insureds under the insurance policies in 1.2.2, 1.2.4, and 1.2.6. Coverage afforded the Additional Insureds under these policies shall be primary insurance. If the Additional Insureds have other insurance, which is applicable to the loss, such other insurance shall be on an excess and/or contingent basis.

1.3 Insurance Provided by Owner.

Prior to issuance of the Notice to Proceed under this Agreement, and except as otherwise specified within this Agreement, Owner shall, at its sole expense, secure and

thereafter maintain insurance of the type and in the limits set forth below. To the extent that Contractor or subcontractors, or the property of such persons, are covered by such insurance, (i) Contractor shall comply and shall require its subcontractors to comply with the terms set forth in this Paragraph 1.3 and with the most current version of the OCIP Project Insurance Manual issued and maintained by Owner, and (ii) Contractor shall exclude, and shall require its subcontractors to exclude, cost of maintaining any duplicative insurance coverage in the Cost of Work.

1.3.1 Owner shall purchase and continuously maintain until Final Acceptance or termination of this Agreement, whichever occurs first, Builder's Risk insurance naming as insureds Owner, Contractor, and subcontractors performing construction Work at the Project Site. Such insurance shall cover all equipment, machinery, supplies, and other property intended to be permanently incorporated in the Project, for which title or risk of loss shall have passed at the time of loss to an insured. Coverage shall apply to such property while it is located at the Project

Site or located at temporary off-site storage or staging areas approved by Owner, or while in land-based transit to the Project Site within the continental United States. Coverage shall be written on an "All Risk" form, including but not limited to, fire, lightning, windstorm, hail, riot, riot attending a strike, civil commotion, aircraft, vehicle, smoke, explosion, vandalism, malicious mischief, damage to glass, theft, flood and earthquake (including sinkhole) coverages, subject to normal industry policy provisions. Such insurance shall include coverage for expenses due to delays in completion as a result of the insured perils, subject to a thirty (30) day deductible. Limits under this insurance shall not be less than 100% of the replacement value of the Project for physical damage to property and related expenses, provided that sublimits shall be established for losses due to earthquake (including sinkhole) and for losses due to flood, which earthquake and flood sublimits shall be no less than the minimum sublimits for such losses established pursuant to Owner's agreements with Lenders.

NOTE: The Contractor or its subcontractor shall be responsible to pay a deductible as specified in Exhibit D. This deductible shall not be included under the GMP.

Exclusions from such insurance may include, but are not limited to, the following: (1) loss resulting from mysterious disappearance or caused by any wrongful removal of any property of a named insured or any additional insured by the employee(s) of such named insured or additional insured, (2) loss or damage to any automobiles, (3) loss or damage to contractor's or any insured subcontractor's owned, leased or rented property or construction-type tools, equipment, machinery, or supplies used for construction but not intended to be permanently incorporated in the Project, and (4) loss or damage covered by a manufacturer's warranty or guarantee.

Loss, if any, under this insurance shall be adjusted with Owner, Lenders, and/or Trustees, with the cooperation of Contractor, and insurance proceed check(s) shall be made payable to Owner or its Lenders or Trustees. Amounts shall be disbursed to Contractor, contractors, or subcontractors through the Change Order procedures.

1.3.2 Owner shall maintain the Owner-Controlled Insurance Program (OCIP) insurance specified in Paragraphs 1.3.2(a), (b) and (c) below with Owner, Contractor, contractors and subcontractors of all tiers, and such other persons or interests as the Owner may designate as insured parties, with limits not less than those specified below for each coverage.

OCIP coverage shall not apply to vendors, suppliers, material dealers or other subcontractors who are solely engaged in the stocking, testing, transporting, picking up, delivering or carrying materials, parts, equipment or any other items or persons to or from the Project Site; to contractors or subcontractors who furnish material worked to a special design in accordance with the Drawings and Specifications but perform no operations at the Project Site, unless required by

Owner in writing; or to non-trade employees who are temporarily at the Project Site for meetings, deliveries or similar activities. OCIP coverage for any subcontractor requires a written determination of enrollment of the applicable

subcontractor by Owner; Owner may, in its sole discretion, and at any time prior to or during the performance of Work by an applicable contractor or subcontractor, elect to not enroll or to cease enrollment of any contractor or subcontractor of any tier.

(a) Workers' Compensation insurance for statutory benefits limits of the applicable Labor Code(s) and Workers' Compensation law(s), and Coverage B - Employer's Liability with minimum limits of $2,000,000 each accident for Bodily Injury by accident, $2,000,000 each employee for Bodily Injury by disease, and $2,000,000 policy limit for Bodily Injury by disease. Such insurance shall be endorsed to include Longshore and Harbor Workers' Compensation Act Coverage and Jones Act Coverage if applicable. The policy shall be endorsed to include Other States Coverage, and a Waiver of Our Right to Recover from Others Endorsement in favor of Indemnitees.

Coverage will apply only to Work performed at the Project Site and to off-site activities directly related to Work performed at the Project Site. Coverage <u>will not apply</u> with respect to employees of contractors or subcontractors engaged in hauling activities from or to the Project Site, or to employees of independent truckers/haulers.

(b) Commercial General Liability insurance, written on an occurrence form that shall be no less comprehensive and no more restrictive than the coverage provided by the standard Insurance Services Office (ISO) form CG 00 01 10 93. Such insurance shall include by its terms or appropriate endorsements Bodily Injury, Property Damage, Personal Injury, Blanket Contractual, Independent Contractors, Products and Completed Operations (for a minimum of three years following Substantial Completion), coverage shall include the perils of "x" (explosion), "c" (collapse) and "u" (underground) exposures. This coverage shall have a minimum limit of $2,000,000 each occurrence, $4,000,000 General Aggregate, and $4,000,000 Products/Completed Operations Aggregate.

Coverage will apply only to Work performed at the Project Site. Such insurance will not include coverage for products liability to any insured party, subcontractor, vendor, supplier, material dealer or others for any product(s) manufactured, assembled or otherwise worked upon away from the Project Site.

(c) Umbrella Liability insurance. Insurance coverages following form with the coverage specified in Paragraphs 1.3.2(a) and 1.3.2(b) will be provided. The umbrella program limits are $50,000,000 per occurrence and $50,000,000 annual aggregate.

(d) Railroad Protective Insurance written on an occurrence form CG00351093 for construction work performed on, over, or under a railroad right of way or within fifty (50) feet of railroad property. The coverage limits are $5,000,000 per occurrence and $10,000,00 aggregate.

(e) General Contractors Pollution on Legal Liability Insurance written on an occurrence form. Coverage for third Party BI/PD arising from pollution conditions on MTA's work site covers pollution events and cleanup costs. Coverage limits are $5,000,000 occurrence and $10,000,000 aggregate.

The coverages described in Paragraphs 1.3.2(a), (b) and (c) are set forth in full in their respective policy forms, and the foregoing descriptions of such policies are not intended to be complete, or to alter or amend any provisions of the actual policies. In matters, if any, in which this description may conflict with such policies, the provisions of the policies shall govern.

1.3.3 Owner reserves the right to terminate or modify any coverages identified in Paragraphs 1.3.1 and 1.3.2 on sixty-(60) calendar days' written notice to Contractor, contractors, and subcontractors of all tiers. To the extent that any coverage identified in Paragraphs 1.3.1 and 1.3.2 is so terminated or modified, or if and when Owner determines to not enroll or cease enrollment of a subcontractor in any of such coverages, then Contractor shall obtain or amend, and shall require its affected subcontractors to obtain or amend, its own policies of insurance
as required in Paragraph 1.2 to include coverage for all operations not included or no longer included in the coverage to be furnished under Paragraph 1.3. Owner will reimburse the actual cost of such alternative insurance, which was originally identified in the bid documents of the applicable subcontractor, as a Change Order with the GMP amended accordingly. Written evidence of such alternative insurance shall be provided to the Owner prior to the actual date of the termination or modification of Owner-furnished insurance coverage, or promptly after Owner's determination of non-enrollment of a subcontractor in any such coverage.

1.3.4 Deduction for Owner-Provided Insurance. The following procedures shall apply to OCIP coverage furnished by Owner under Paragraph 1.3.2.

1. Initial OCIP Deduction. In consideration of Owner providing the insurance coverages outlined in Paragraph 1.3, Owner and Contractor mutually agree that the contract price has been reduced by the Initial OCIP Deduction as stated in the relevant bid document. The Initial OCIP Deduction is based on the information provided by Contractor on the *Insurance Cost Worksheet and is subject to the approval of the Owner..*

2. OCIP Insurance Worksheets. Prior to any subcontractor commencing Work on-site, Contractor shall provide to MTA Insurance Cost Worksheets in the form set forth in "Exhibit A" of this Agreement ("Bid Worksheets") completed and signed by each subcontractor.

3. Change Orders. All change orders shall be submitted net of insurance. Each proposed Change Order in excess of $500,000 should identify an OCIP Deduction for the Work described in the proposed Change Order. The proposed Change Order shall identify the estimated man-hours; estimated workers' compensation payroll and estimated OCIP Deduction included within the total Change Order amount.

At Owner's request, Contractor shall complete an *Insurance Cost Worksheet* and submit any other requested information for the Work specified in the Change Order. Owner, at its sole discretion, may amend the Initial OCIP Deduction to include the insurance costs specified in the Change Order and/or the *Insurance Cost Worksheet.*

4. Adjustments to the Initial OCIP Deduction. Owner and/or its representatives shall periodically review the appropriateness of each subcontractor OCIP Deduction. Owner may adjust the OCIP Deduction to reflect the subcontractor's actual insurance cost computed using audited payroll. Owner may withhold from Final Payment in amount adequate to cover the difference between the initial and audited OCIP deductions. If the initial OCIP Deduction is within 10% of the audited OCIP Deduction (as determined by reported and/or audited payroll), no change to the Final Payment will be issued.

1.4 Requirements for All Project Insurance.

Contractor shall cause the insurance to be obtained under Paragraph 1.2, and Owner shall cause the insurance it obtains under Paragraph 1.3, to satisfy the following provisions and requirements.

1.4.1 Owner and Contractor waive all rights against (i) each other and the subcontractors, agents and employees of each other, and (ii) subcontractors, agents and employees, for damages caused by fire or other peril to the extent covered by property insurance obtained by Owner pursuant to this Article 11 or by any other property insurance applicable to the Work, except such rights as each may have to proceeds of such insurance held by Owner as trustee. The insurance policies obtained by Owner pursuant to Paragraph 1.3 shall be endorsed to include a waiver of subrogation in favor of Indemnitees as well as Contractor and subcontractors, and the insurance policies obtained

by Contractor, and subcontractors pursuant to Paragraph 1.2 shall be endorsed to include a waiver of subrogation in favor of Indemnitees; provided, however, that such a waiver of subrogation shall not be required with respect to policies for which all of the Indemnitees are named or additional insureds.

1.4.2 All insurance required by this Agreement shall be from insurance companies authorized to transact that class of insurance in the State of Maryland and having a minimum rating of (or equivalent to) A– VIII by A.M. Best & Company. The required certificates must be personally and manually signed by the authorized representative of the insurance company shown on the certificate with proof that he/she is an authorized representative thereof. In addition, certified, true and exact copies of all insurance policies required by this Agreement shall be provided to either party within a reasonable period of time upon written request.

1.4.3 All of the required insurance shall provide primary coverage with respect to the Work. Any other insurance maintained by Owner, Contractor, or subcontractor shall be in excess of this insurance and shall not contribute to it.

1.4.4 Thirty (30) calendar days' written notice shall be given to Owner and Contractor of any cancellation, intent not to renew, or reduction in the policies' coverage except in the application of the aggregate limit provisions.

1.4.5 Prior to commencing any Work at the Project Site, Contractor, and subcontractors of all tiers shall furnish Owner with a certificate(s) of insurance giving evidence of insurance required by Paragraph 1.2 and evidence of additional insurance endorsements required by Paragraphs 1.2.7 and 1.4.1.

Additionally, Contractor and its subcontractors shall furnish a certificate(s) of insurance or a policy binder(s) of insurance or a policy binder(s), evidencing replacement coverage, to Owner thirty (30) calendar days prior to expiration of any such policies, so that there shall be no interruption in Work due to lack of proof of insurance coverage required by this Agreement. Owner shall not be liable for any delays (or costs or damages resulting therefrom) resulting from Contractor's failure (or that of any subcontractor of any tier) to obtain the insurance required of it under Paragraph 1.2, or to deliver the required certificates of insurance to Owner.

Certificates of insurance shall provide for at least thirty- (30) days' prior written notice to Owner of cancellation (unless cancellation is for nonpayment of premium, in which case 10 days' notice will suffice) or materials alteration, and shall delete the words "endeavor to" from the obligation to notify the certificate holder (Owner) of such cancellation or modification. Upon request of Owner, Contractor shall provide (or require its subcontractors to provide) Owner with a certified copy of any policy of insurance required by Paragraph 1.2.

Vendors, suppliers, material dealers and others who merely transport, pick up, deliver or carry materials, parts or equipment or any other items or persons to or from the Project

Site and those who furnish material worked to a special design but perform no operations at the Project Site shall not be required to furnish a certificate(s) or other evidence of insurance to Owner.

1.4.6 The insurance coverages and limits required under this Agreement are designed to meet the minimum requirements of Owner. They are not designed as a recommended insurance program for Contractor or subcontractors; and meeting these minimum requirements does not relieve such persons of their obligations under Paragraph 11.1.

1.4.7 The amounts and types of insurance shall conform to the minimum requirements set forth in this Appendix I, utilizing Insurance Services Office (ISO) policies and endorsements where applicable.

1.4.8 The acceptance of delivery of any certificates of insurance or certified insurance policies required to be purchased and maintained pursuant to this Agreement does not constitute approval or agreement by the recipient that the insurance requirements have been met or that those certificates of insurance or insurance policies are in compliance with this Agreement.

1.4.9 All of the insurance required by this Article 11 shall be issued as required by law and shall be endorsed, where necessary, to comply with the minimum requirements contained herein. Certified copies of renewal policies or binders must be provided thirty (30) calendar days prior to expiration of current policies so that there shall be no interruption in Work due to lack of proof of insurance coverage as required in this Agreement.

1.4.10 Owner may elect at any time during the term of this Agreement to require Contractor to procure and maintain other or additional insurance. Notice of such election shall be given at least sixty (60) days prior to the effective date of the required modifications. Owner shall reimburse any additional costs incurred by these parties in securing insurance as a part of the Cost of the Work, and the GMP shall be revised by Change Order to be increased by the amount of such additional reimbursement.

EXHIBIT C

FORMS TO BE COMPLETED BY SUCCESSFUL BIDDER ONLY

Enrollment Application
Notice of Subcontractor Award
Notice of Work Completion
Monthly Payroll Report

Error! Objects cannot be created from editing field codes. Form-3

ENROLLMENT APPLICATION

Numbers reference attached instructions

MTA - OCIP

Examine your current Workers' Compensation and General Liability Policies or contact your Insurance Agent to assist you with completing this form. *** **NOTICE** *** **Enrollment** is not automatic and requires the satisfactory completion of the Aon Form-1a or Form-1b, Form-2 and Form-3. In addition, submit a Certificate of Insurance providing evidence of your *off-site* coverage. Please refer to the Insurance Manual for coverage requirements. Use of this form is mandatory. Duplicate as required.

A. Subcontractor Information:

Federal ID No.: 1

	Business Information *(headquarters)*	Contact Information (address questions to.)
Company Name & dba:	2	3
Contact Name & Title:		
Address:		
Washington, DC Zip Code:		
Telephone:		
Fax:		
Email Address:		

Indicate your Organization's Structure: 4 ☐ Corporation ☐ Partnership ☐ S-Corporation ☐ Joint Venture ☐ Sole Proprietor ☐ Other _____

B. Subcontract Information:

Subcontract No.: 1

Description of Work: 2

Subcontract Amount $: 3

Amount of Self Performed Work $: 4

5 Are you a: Subcontractor / Subcontractor *(any tier)*

If Subcontractor (*any tier*), identify under contract with: 6

Start Date: 7 ☐ Actual ☐ Estimated

Completion Date: 8 ☐ Actual ☐ Estimated

C. Workers' Compensation Insurance Information for Work Described Above: *(attach a separate sheet if necessary)*

a State	b Class Code	c Description	e Man-hours	f Payroll
1				
		Totals	2	3

D. Provide your current Workers' Compensation Information:

Anniversary Rating Date:	Experience Modification:	Bureau File Number:
1	2	3

Your WC Insurance Carrier: 4

Policy #: 5 Effective Date: 6 Expiration Date: 7

E. Contacts: *(Complete if Applicable)*

Position	1 Name & Title	2 Phone	3 Fax	4 email address
Project				
Safety Rep:				
Contract				
Claims:				
Payroll:				

Provide Location of payroll records if different than Corporate address: 5

Address: _____ Contact: _____

Washington, DC Zip Code: _____ Phone: _____

Error! Objects cannot be created from editing field codes. Form-3	**ENROLLMENT APPLICATION** Numbers reference attached instructions	MTA - OCIP Page 2 of 2

F. Subcontract Information: List all subcontractors that will be working for you on this project (complete the information in the following table). Use additional paper if necessary:

1 Subcontractor	2 Subcontract Amount	3 Contact Person	4 Address & Email Address	5 Phone & Fax Number

G. Enrollment Questions: Answer each question. Use additional paper if necessary.

1 Will you have any off-site location(s) 100% dedicated to this project? Yes No If yes, please provide address:

_____

_____

2 Please check if: Any aircraft used on this project Any watercraft used on this project

3 Please indicate if labor from the following sources will be used: Employee Leasing Firm Temporary Labor Agency

H. WARRANTY APPLICABLE TO PROGRAM INSURANCE COVERAGE

1 Premiums for this Program are the responsibility of *Maryland Transit Administration* and I agree any and all return of premium, dividends, discounts, or other adjustments to any Program policy(ies) is assigned, transferred and set over absolutely to *Maryland Transit Administration*. This assignment applies to the Program policy(ies) as now written or as subsequently modified, rewritten or replaced. Rights of Cancellation for all Program insurance policy(ies) arranged by *Maryland Transit Administration* are assigned to *Maryland Transit Administration*.

2 I will pay the cost of premium(s) for non-Program insurance coverage, specified in the Subcontract Documents.

3 I authorized the release of all claim information for all insurance policies under this Program.

4 It is my responsibility to notify my insurance carrier(s) that I am enrolling in this Program.

5 I have omitted from my bid the insurance costs for the coverage provided by *Maryland Transit Administration*.

6 The statements in this insurance application are true to the best of my knowledge.

I. Signature Block :

I **verify** the information presented above and attachments are correct:

Name: _____ Date: _____
(please print)

Title: _____ Signature: _____

Mail or Fax to: **Ed McDuffie**
Aon Risk Services, Inc. of DC
1120 20th Street NW, Suite 600
Washington, DC 20036-3406

Fax # **(202) 429-8530**
Phone # **(202) 429-8513**

Or Email: ed_mcduffie@ars.aon.com

Error! Objects cannot be created from editing field codes. Form-3	**ENROLLMENT APPLICATION** **INSTRUCTION**	**MTA - OCIP** Page 1 of 1

This form must be completed and submitted by each successful Subcontractor and Subcontractor of any tier prior to Site mobilization for each contract awarded. The Subcontractor will submit the completed form to Aon Risk Services. Upon receipt of this form, Aon will issue, to the Subcontractor, a Certificate of Insurance evidencing coverage in the Controlled Insurance Program. The completed Certificate of Insurance and workers compensation insurance policy will be mailed to the Enrolled party.

A. Subcontractor Information

1 Enter your company's Federal ID number. This number can be found on filings made to the federal government such as your tax return.
2 Enter your company's name, mailing address and phone/fax number for your company's headquarters in the space provided below.
3 Enter the name of the person Aon should contact if questions arise. Include mailing address, phone/fax and email address in the space provided below.
4 Identify your company's legal structure by checking the box that applies. If the correct legal structure is not specifically listed, please check the "Other" box and specify in the space provided.

B. Subcontractor Information

1 Enter the Subcontractor Number that was included in Maryland Transit Administration's originating documentation.
2 Provide a brief description of the work you will be performing at the Constitution Center site.
3 Identify the total amount of your Subcontract.
4 Identify the percentage of work that you anticipate will be self-performed.
5 Check the appropriate box that identifies if you contract directly with Maryland Transit Administration or are a Subcontractor.
6 If you are a lower tier Subcontractor, identify the entity you are under Subcontract with.
7 Enter the Date you anticipate starting work and then mark whether the date provided is actual or estimated
8 Enter the Date you anticipate completing the described work and then mark whether the date provided is actual or estimated.

C. Workers' Compensation Insurance Information *(Duplicate or attach additional sheets if necessary.):*

1 A Enter the 2 digit abbreviation for the state in which the work will be performed.
B Enter the 4 digit workers compensation class code that applies to the work identified in B2.
C Enter the workers compensation class code description that applies to the work identified in C1c.
D Enter the Workers' Compensation rate that applies to the class code.
E Enter the estimated Man-hours required to complete the described work for each Worker's Compensation class code.
G Enter the estimated Payroll required to complete the described work for each Worker's Compensation class code. Use only unburdened payroll and exclude the premium portions of any over-time pay.
2 Total all estimated Man-hours for each class code. Be sure to include information from additional pages if used.
3 Total all estimated Payroll for each class code. Be sure to include information from additional pages if used.

D. Current Worker's Compensation Information *(This information relates to your corporate or existing coverage)*

1 Provide your Company's Anniversary Rating Date. Information can be located on your bureau's WC Experience Modification worksheets.
2 Enter your current WC Experience Modification Factor.
3 Enter your Bureau File Number also referred to as your Risk Identification Number. This number can also be found on your Modificati0n worksheets.
4 Identify your insurance carrier for Workers' Compensation Coverage.
5 Provide your Worker's Compensation Policy Number.
6 Provide the effective date of your Worker's Compensation policy.
7 Provide the expiration date of your Worker's Compensation policy.

E. Contacts *(Requested Contact information is for specific functions. It is possible to have a single person fulfill multiple responsibilities)*

1 Identify the name of the person and their title for each function. These individuals should be located, if at all possible, on-site.
2 Provide the phone number for each person identified above.
3 Provide the fax number for each person identified above.
4 Provide the email address for each person identified above, if applicable.
5 Identify the physical location of where your payroll records are retained. Provide the Address, City, State, Zip Code, Telephone, Fax Number and Email Address of the person responsible for maintaining the payroll information.

F. Subcontractor Information *(Provide the following information for each lower tier Subcontractor that will be performing work at the Constitution Center site.)*

1 Identify the name of the Subcontracting firm
2 Provide the estimated value of the subcontracted activity.
3 Provide a contact name, preferably the project manager, for the subcontractor.
4 Provide the mailing address for the Subcontractor.
5 Provide the phone number for the Subcontractor.

G. Enrollment Questions

1 Determine if you will have any locations, off-site, that will be 100% dedicated to this project. Mark the appropriate box (yes/no). If you answer yes – provide the address of each location you identified as 100% dedicated.
2 Mark the box or boxes that apply. Contemplate only work performed under this contract.
3 Mark the box or boxes that apply. Employee Leasing Firms are those firms that supply the entire labor force for your company.

H. Warranty Statements:

1-6 Read each Warranty statement thoroughly. If you have questions regarding any of these statements, contact Aon.

I. Signature Block: This form must be signed by a representative of your company knowledgeable of its accuracy.

Forward the completed Enrollment Application to the Aon administrator identified at the bottom of page of the form. This form must be received by the administrator prior to the start of your work.

NOTICE OF SUBCONTRACTOR AWARD

This form is to be completed every time you enter into a subcontract and submitted to Aon Risk Services, Inc. of MD at the address shown

Aon Risk Services, Inc. of MD
Attn: Chuck Burn
500 E. Pratt Street, 7th Floor
Baltimore, MD 21202

Phone: 410.547.2882
Fax: 847.953.0919

PROJECT NAME

BID PACKAGE NAME: _____

BID PACKAGE NUMBER: _____

AWARDING CONTRACTOR: _____

We have awarded a subcontract as follows:

Type of Work: _____

AWARDED TO: _____

Address: _____

City, State, Zip: _____

Federal ID#: _____

Insurance Contact: _____

Telephone Number: _____

Fax Number: _____

E-Mail Address: _____

Date of Subcontract: _____

Estimated Contract Amount: _____

Probable Starting Date: _____

Probable Completion Date: _____

_____

Authorized Signature Title Date

This form must be submitted each time a new subcontract is awarded. This includes subcontractors who are working on existing projects and are already enrolled in the OCIP program.

Error! Objects cannot be created from editing field codes. **Form-4**	**On-Site Payroll Report -Form4** Numbers reference attached instructions	**MTA OCIP** **Page 1 of 2**

Complete a Separate Form for Each Subcontract with Maryland Transit Administration. Your report is due not later than the 10th day of each month. Delay in providing this report may result in payments being withheld.

A. REPORT IDENTIFICATION

Period Beginning: 1 _____ **Period Ending:** 2 _____ **Year:** 3 _____

Subcontractor: 4 _____

Under Contract with: 5 _____

Contract #: 6 _____

B. ACTIVITY REPORT

a State	b workers' compensation Class Code	c Work Description	d Man-Hours	e Gross Payroll	f Reportable Payroll *
1					
		TOTALS:	2	3	4

* Do not include premium (excess) overtime wages, use straight time wage rates only. You must also comply with all rules set forth by the Workers Compensation Bureau in the state in which the work is performed.

C. ADDITIONAL DATA REQUIREMENTS :

1. _____
2. _____
3. _____

D. Signature Block : I **verify** the information presented above and attachments are correct:

Name: _____ **Date:** _____
(please print)

Title: _____ **Signature:** _____

☐ CHECK IF THIS IS YOUR LAST PAYROLL REPORT. COMPLETE AN AON FORM-5 "NOTICE OF WORK COMPLETION" AND INCLUDE WITH THIS PAYROLL REPORT.

Note: Information can be submitted on-line at www.aonwrap.aon.com. Please contact your Administration Staff to obtain a user ID and Password.

Mail or Fax to: **Ed McDuffie**
Aon Risk Services, Inc. of DC
1120 20th Street NW, Suite 600
Washington, DC 20036-3406

Fax # **(202) 429-8530**
Phone # **(202) 429-8513**

Or Email: ed_mcduffie@ars.aon.com

The Subcontractor and every Subcontractor of any tier performing work at the Project Site for each Subcontract awarded must complete this form each month. The Subcontractor must attach the completed report to their monthly pay request in order to receive interim payment. Subcontractors will be responsible for the submission of this form by their lower tier Subcontractors. Aon Risk Services can forward a supply of these forms to your company upon request.

A. Report Identification

1 Fill in the month and day for the beginning of the period you are reporting on.
2 Fill in the month and day for the ending of the period you are reporting on.
3 Fill in the year that applies to the reporting period.
4 Enter the name of your firm.
5 If you are a lower tier Subcontractor, identify the name of the firm you are contracted with. If you are a Subcontractor enter N/A
6 Provide your Subcontract Number

B. Activity Report

1 For each workers' compensation Class Code that applies to work performed during the reporting period, provide the following information:
- a Identify the state in which the work was performed.
- b Identify the workers' compensation Class Code that applies to the work performed during the period. (Most states use a four digit No.)
- c Provide a brief description of the work by class code.
- d Identify the number of Man-hours worked by your employees for each applicable class code.
- e Provide the Gross Payroll paid to your employees. This should include overtime pay and vacation pay.
- f Determine the Reportable Payroll. Reportable Payroll does not include the premium portion of any overtime pay (i.e. 45 hours X $10.00/hr = 450.00 *do not include the premium overtime pay of $5.00 for the 5 hours of overtime*)

2 Total the Man-hours provided on the payroll report.
3 Total the Gross Payroll provided.
4 Total the Reportable Payroll.

C. **Additional Data Requirements:** If questions are listed in this section of the form, they are unique to this project. Please refer to the Insurance Manual.

D. **Signature Block:** This form must be signed by a representative of your company with the authority to Verify the information is correct.

Note: Information can be submitted on-line at www.aonwrap.aon.com. Please contact your Administration Staff to obtain a user ID and Password.

Error! Objects cannot be created from editing field codes. Form-5	NOTICE OF WORK COMPLETION Numbers reference attached instructions	MTA OCIP Page 1 of 1

1 **Contractor Name:** _____

2 **Contract #:** _____

3 **Description of Work Performed:** _____

4 **Date Work Completed:** _____

5 **Date this Subcontract Completed:** _____

The following lower tier Subcontractors have completed their Work at the Project site: ***(Add attachment if more space is needed)***

a Subcontractor's Name	b Contract Number	c Description of Work	d Date Completed
6			

Location of your payroll records ***(Receipt of this form will initiate the payroll audit process)*****:**

Address: 7 _____

State, City Zip Code: _____

Contact/Phone #: _____

The undersigned acknowledges request for termination of coverage under the OCIP as of the date indicated above for the specified Contract. Should we return to the work Site, we will be working under our own insurance program and must provide MTA with a Certificate of Insurance showing our own coverage as detailed in our contract.

Signed by: 8 _____

Title Date

Approved by: 9 _____

DAVIS Project Manager Date

Mail or Fax to: **Ed McDuffie**
Aon Risk Services, Inc. of DC
1120 20th Street NW, Suite 600

Fax # **(202) 429-8530**
Phone # **(202) 429-8513**

Washington, DC 20036-3406
Or Email: ed_mcduffie@ars.aon.com

Error! Objects cannot be created from editing field codes. Form-5	NOTICE OF WORK COMPLETION INSTRUCTION	MTA OCIP Page 1 of 1

- This form will be completed and returned to the OCIP Administrator by the Contractor whenever work is completed for each Subcontract. This form will initiate the final payroll audit process for the Contractor identified in item 1. Final Payments and Release of Retainage will not occur until all payroll work is complete and finalized.

1 - Provide the name of the Contractor completing their work.
2 - Enter the Subcontract number for the work being completed.
3 - Provide a brief description of the work being completed.
4 - Provide the Date the Work was completed.
5 - Provide the Date the Subcontract was completed, if other than the work completion date.
6a - Enter the name of each Subcontractor that performed work for you that has completed their work.
b - Enter their Subcontract Number.
c - Provide a brief description of their work.
d - Provide the Date they completed their work.
7 - Identify the physical location of where your payroll records are retained. Provide the Address, State, City, Zip Code, Contact Name and Telephone Number of the person responsible for maintaining the payroll information.
8 - This form must be signed by a representative of your company with the authority to Verify the information is correct.
9 - Have this form approved by the Project Manager for the Project site.

EXHIBIT D

SCHEDULE OF DEDUCTIBLES

MTA BUILDERS RISK 2012 - 2013

CATEGORY	CLASSIFICATION	DEDUCTIBLE
Buildings	Fire Resistive / Non-Combustible	Up to $10M in value: $5,000 $10M - $25M in value: $10,000 $25M - $50M in value: $25,000
	Masonry Non-Combustible	Up to $10M in value: $5,000 $10M - $25M in value: $10,000 $25M - $50M in value: $25,000
	Joisted Masonry	Up to $10M in value: $5,000 $10M - $25M in value: $10,000 $25M - $50M in value: No Coverage
	Frame	Up to $10M in value: $10,000 $10M - $25M in value: $25,000 $25M - $50M in value: No Coverage
	Renovations (Non Structural)	Up to $10M in value: $10,000 $10M - $25M in value: $25,000 $25M - $50M in value: $25,000
	Renovations (Structural)	Up to $10M in value: $10,000 $10M - $25M in value: $25,000 $25M - $50M in value: No Coverage
Sitework	Paving, Grading, Landscaping & Site Amenities	$25,000 (up to $25M in value)
Roadways	Culverts, Simple Span Bridges, Signage, Lighting, Landscaping, Cut and Cover Storm Sewers, Manholes & Catch Basins	$25,000 (up to $25M in value)
Earthquake		$25,000
Flood	Within 100 Year Flood Plain (Zone A & V)	$250,000 ($10M in capacity)
	Within 500 Year Flood Plain (Zone B & Shaded X)	$100,000 ($20M in capacity)
	All Other Flood	$25,000 ($50M in capacity)

SECTION 01500
TEMPORARY FACILITIES AND CONTROLS

PART 1: GENERAL

1.01 DESCRIPTION:

A. This section specifies the general requirements for furnishing, installing, and operating temporary facilities and controls. This Section includes:

1. Temporary Utility Service
2. Temporary Sanitary Facilities
3. Project Identification Signs
4. Protection of Existing Facilities
5. Community Relations
6. Construction Operations Under Traffic
7. Safety Requirements
8. Pollution Abatement
9. Historical and Scientific Specimens
10. Salvage Materials and Equipment

B. Related work specified elsewhere:

1. Section 01150: Interface Requirements
2. Section 01550: Maintenance of Traffic
3. Section 01570: Environmental Protection

1.02 TEMPORARY UTILITY SERVICE:

A. Determine the need for such temporary utility service as may be required to prosecute the work and make arrangements with utility companies for such service. Remove all materials and equipment involved with temporary utility service as part of final cleanup. All costs incurred in obtaining permits; utility service, including connection and disconnection; and furnishing, installing, maintaining, and removing such materials as may be required shall be borne by the Contractor.

1.03 TEMPORARY SANITARY FACILITIES:

A. The Contractor shall furnish for use of his work force the necessary toilet conveniences, secluded from public observation. Keep in a clean, sanitary condition. Comply with the requirements and regulations of the State of Maryland, Department of Health, and other agencies having jurisdiction.

1.04 PROJECT IDENTIFICATION:

A. FTA Project Signs: The requirements for the FTA project signs are specified in Section SGP-10 of the Supplementary General Provisions.

B. Contractor's Identification Signs: The Contractor may erect his own signs to identify himself and, if he wishes, his subcontractors. The overall size of the Contractor's identification signs shall not exceed four (4) feet by eight (8) feet wide. The exact location, method of mounting and mounting height of the Contractor's identification signs will be subject to the approval of the Engineer.

C. Sign Maintenance: Maintain all signs throughout the course of construction until final acceptance, keeping them clean, in good repair, and free of obstructions. Upon final acceptance of the work, remove and dispose of all signs.

1.05 PROTECTION OF EXISTING FACILITIES:

A. The Contractor shall be responsible for protecting all existing roadways, tracks, fences and structures against damage caused by his operations. This includes utilities, roadways, and railroad. If at any time, in the opinion of the Engineer, proper precautions are not being taken to secure this protection, the Contractor shall at no additional cost to the Administration, install and maintain such additional protection as may be directed by the Engineer.

1.06 COMMUNITY RELATIONS:

A. The Administration will establish a program of public contact for conducting effective relationships with communities and businesses in proximity to construction areas. As part of these programs the Contractor shall establish and maintain continuing liaison with persons occupying property or doing business in the immediate area of the Worksite for the purpose of minimizing inconveniences resulting from construction.

B. The Contractor shall contact those residents or businessmen who might reasonably be expected to be affected by the construction and make known to them the name of the Contractor representative on the Worksite

with responsibility for community relations and explain to them the means by which the representative can be contacted expeditiously.

C. The Contractor shall, as part of the monthly progress status report specified in Section 01300, note and explain all community relations activities undertaken during the report period.

1.07 CONSTRUCTION OPERATIONS UNDER TRAFFIC:

A. General: Construction equipment is defined for the purpose of this article as all types of equipment, vehicles, and tools used in connection with construction work. The term workmen includes every person or firm performing work in or adjacent to public streets.

B. Construction Equipment: When in traffic lanes, all vehicles and equipment shall be operated at normal traffic speeds. If this is not practicable, a slow moving vehicle emblem must be displayed in accordance with Article 66½ (Motor Vehicle Code), Annotated Code of the State of Maryland. Construction equipment shall not be parked in any lane intended for use by normal traffic. Equipment parked or stored at the work site shall be behind a guardrail, barrier, curb or other protective device.

C. One-Way Traffic: No construction equipment shall be operated on traffic lanes, except in the designated direction of travel for respective lanes.

D. Construction Operations:

1. No construction work involving occupancy of traffic lanes shall be performed during adverse weather conditions or adverse road conditions except when so authorized by the Engineer and traffic shall be properly safeguarded by the use of flashers, and lights in addition to the signs and other markings prescribed herein. During these periods, no construction deliveries shall take place over a travel lane or immediately adjacent thereto.

2. When traffic conditions dictate, the Engineer may require the Contractor to modify his work operation for such length of time as required to alleviate the hazardous traffic conditions.

E. Equipment Travel:

1. No construction equipment other than that designed and used for general highway transportation shall be moved on streets during hours of darkness, periods of adverse weather conditions which

reduce normal visibility, or when the roadway is covered with snow or ice.

2. Any construction equipment or material required in construction which exceeds the maximum vehicle dimensions enumerated in Article 66½ (Motor Vehicle Code), shall be moved only in accordance with the established State and local regulations. No such oversized load shall be moved over streets of the local jurisdictional agency without first obtaining the approval of the appropriate agency.

F. Crossing Traffic Lanes: When crossing open traffic lanes by construction equipment is necessary, such crossing shall be safeguarded with flagmen.

G. Flagmen: Provide qualified flagmen thoroughly instructed in flagging procedures as required to safeguard and maintain vehicle and pedestrian traffic. All flagmen shall perform their duties courteously and in such manner as will insure the safety and convenience of the traffic within the limits of the guarded area. Traffic shall not be flagged to a stop unless such is necessary for safety. Flagmen shall be supplied with flares for adverse weather conditions and with red flag not less than 24 inches square for slowing or directing traffic to another lane. Flagmen shall wear fluorescent orange safety vests and yellow hard hats.

H. Removal of traffic Control Devices: All temporary signs, barricades, barrier curbs, drums, and cones used for safeguard traffic in connection with construction work shall be removed at the close of the work day, unless the state of the work is such that warning devices are still needed and are adapted for night closing. In such cases notify the Engineer reasonably in advance of the normal quitting time that he may review the status of the work and request additional safety measures as he deems necessary.

I. Storage: No material shall be stored on any lane intended for traffic use.

1.08 WORK AND STORAGE AREAS:

A. Section 01110 of the Special Provisions will describe work areas available to Contractor for work and storage areas. Additional work and storage space, if required, shall be provided by the Contractor at his own expense. Parking facilities for Contractor's personnel shall be the Contractor's responsibility.

1.09 SAFETY REQUIREMENTS:

A. Refer to the General Provisions Section GP-7 for safety and health requirements.

B. Employ and assign to the work a full-time Safety Superintendent who has the specialized training and experience in construction safety supervision, is thoroughly familiar with OSHA requirements, and is acceptable to the Engineer. Employ the Safety Superintendent exclusively for purpose of supervising the safety of persons on or about the work and property affected thereby.

C. First Aid Stations: At site of the work, establish and fully equip a first aid station. Maintain a qualified first aid attendant on duty in the station at all times when the work is in progress, except when on emergency calls.

1.10 POLLUTION ABATEMENT:

A. General: Refer to General Provisions GP-7. Conduct operations in a manner to minimize pollution of the environment surrounding the area of work by every means possible. Apply specific controls as follows:

1. Material Transport: Truck leaving the site and entering paved public streets shall be cleaned of mud and dirt clinging to body and wheels of the vehicle. Trucks arriving at and leaving the site with materials shall be loaded in a manner, which will prevent dropping of materials or debris on the streets. Contractor shall maintain a suitable vehicle cleaning and inspection installation with permanent crew for this purpose. Spills of materials in public areas shall be removed immediately at no additional cost to the Administration.

2. Waste Materials: No waste or erosion materials shall be allowed to enter natural or man-made water or sewage removal systems. Erosion materials from excavations, borrow areas or stockpiled fill shall be contained within the work area. Contractor shall develop methods for control of waste and erosion, which shall include such means as filtration, settlement and manual removal.

3. Burning: No burning of waste will be allowed.

4. Dust Control: the Contractor shall at all times control the generation of dust by his operations. Control of dust is mandatory and shall be accomplished by water sprinkling or by other methods approved by the Engineer.

5. Noise Control:

a. General: Minimize noise caused by work operations, and provide working machinery and equipment fitted with efficient noise suppression devices. Employ other noise abatement measures necessary for protection of both employees and the public. In addition, restrict working hours and schedule operations in a manner that will minimize to the greatest extent feasible, disturbance to residents in the vicinity of the work. Provide protection against noise exposure for employees in accordance with GP 7.05.

b. Definitions:

i. Daytime, refers to the period from 7:00 a.m. to 10:00 p.m. local time daily except Sundays and legal holidays. Nighttime, refers to all other times including all day Sunday and legal holidays.

ii. Construction Limits are defined for the purpose of these noise control requirements as the Administrations right-of-way lines or property lines as indicated on the drawings.

iii. Zones, Special Zones and special Construction sites outside of Construction Limits shall be designated by the local agency having jurisdiction.

c. Monitoring: Monitor noise levels of work operations to assure compliance with the noise limitations contained herein. Retain record of noise measurements for inspection by the Engineer. Promptly inform the Engineer of any complaints received from the public regarding noise. Describe the action proposed and the schedule for implementation and subsequently inform the Engineer of the results of the action.

d. Measurement Procedure:

i. Except where otherwise indicated, perform all noise measurements using the A-weight network and (slow) response of an instrument complying with the criteria for Type 2 General Purpose sound level meter as described in ANSI S1.4. Measure impulsive or impact noises with an impulse sound level meter complying with the criteria of IEC 179 for impulse sound level meters. As an alternative procedure, a type 2 General Purpose sound level meter

on C-weighting and (fast) response may be used to estimate peak values of impulsive or impact noises. Transient meter indications of 125 dbC (fast) or higher will be considered as indications of impulsive noise levels of 140 db or greater.

ii. Measure noise level at buildings affected acoustically by the Contractor's operations at points between three feet and six feet from the building face to minimize the effect of reflections.

iii. Measure noise levels at points on the outer boundaries of Construction Limits or Special Construction Sites for noise emanating from within.

iv. Where more than one criteria of noise limits are applicable, use the more restrictive requirement for determining compliance.

e. Noise Restrictions: Noise restrictions shall be in accordance with local ordinances.

B. Maintaining Flow of Sewers and Drains: The Contractor shall, at his own expense, provide for and maintain the flow of all sewers, drains, house or inlet connections, and all water courses which may be met during progress of the work. The Contractor shall not allow the contents of any sewer, drain, or house or inlet connection to flow into trenches. The Contractor shall, at his own expense, immediately remove from proximity of the work all offensive matter; using such precautions as are required by the Engineer.

1.11 HISTORICAL AND SCIENTIFIC SPECIMENS:

A. All articles of historical or scientific value, including coins, fossils, and articles of antiquity, which may be uncovered by Contractor during progress of the work, shall become the property of the Administration. Such findings shall be reported immediately to the Engineer who will determine method of removal, where necessary, and final disposition thereof.

1.12 SALVAGE MATERIALS AND EQUIPMENT:

A. The Contractor shall maintain adequate property control records for materials and equipment specified to be salvaged. Contractor shall be responsible for the adequate storage and protection of salvaged materials and equipment. The Contractor shall replace, at no cost to the Administration, salvage materials

and equipment which are broken or damaged during the salvage operations as the result of the Contractor's negligence.

B. Salvage material not specified for reuse shall be the property of the Contractor and shall be removed from the site.

PART 2: PRODUCTS

NOT USED

PART 3: EXECUTION

NOT USED

PART 4: MEASUREMENT AND PAYMENT

4.01 TEMPORARY FACILITIES AND CONTROLS:

A. The temporary facilities and controls work required under this Section will not be measured.

B. All costs in connection herewith will not be paid for directly, but will be considered incidental to the item of work to which they pertain.

1. Temporary utility service
2. Temporary sanitary facilities
3. Protection of existing facilities
4. Work and Storage area
5. Community relations
6. Safety requirements
7. Pollution abatement
8. Salvage materials and equipment

END OF SECTION

SECTION 01500
TEMPORARY FACILITIES AND CONTROLS

PART 1: GENERAL

1.01 DESCRIPTION:

A. This section specifies the general requirements for furnishing, installing, and operating temporary facilities and controls. This Section includes:

1. Temporary Utility Service
2. Temporary Sanitary Facilities
3. Project Identification Signs
4. Protection of Existing Facilities
5. Community Relations
6. Construction Operations Under Traffic
7. Safety Requirements
8. Pollution Abatement
9. Historical and Scientific Specimens
10. Salvage Materials and Equipment

B. Related work specified elsewhere:

1. Section 01150: Interface Requirements
2. Section 01550: Maintenance of Traffic
3. Section 01570: Environmental Protection

1.02 TEMPORARY UTILITY SERVICE:

A. Determine the need for such temporary utility service as may be required to prosecute the work and make arrangements with utility companies for such service. Remove all materials and equipment involved with temporary utility service as part of final cleanup. All costs incurred in obtaining permits; utility service, including connection and disconnection; and furnishing, installing, maintaining, and removing such materials as may be required shall be borne by the Contractor.

1.03 TEMPORARY SANITARY FACILITIES:

A. The Contractor shall furnish for use of his work force the necessary toilet conveniences, secluded from public observation. Keep in a clean, sanitary condition. Comply with the requirements and regulations of the State of Maryland, Department of Health, and other agencies having jurisdiction.

1.04 PROJECT IDENTIFICATION:

A. FTA Project Signs: The requirements for the FTA project signs are specified in Section SGP-10 of the Supplementary General Provisions.

B. Contractor's Identification Signs: The Contractor may erect his own signs to identify himself and, if he wishes, his subcontractors. The overall size of the Contractor's identification signs shall not exceed four (4) feet by eight (8) feet wide. The exact location, method of mounting and mounting height of the Contractor's identification signs will be subject to the approval of the Engineer.

C. Sign Maintenance: Maintain all signs throughout the course of construction until final acceptance, keeping them clean, in good repair, and free of obstructions. Upon final acceptance of the work, remove and dispose of all signs.

1.05 PROTECTION OF EXISTING FACILITIES:

A. The Contractor shall be responsible for protecting all existing roadways, tracks, fences and structures against damage caused by his operations. This includes utilities, roadways, and railroad. If at any time, in the opinion of the Engineer, proper precautions are not being taken to secure this protection, the Contractor shall at no additional cost to the Administration, install and maintain such additional protection as may be directed by the Engineer.

1.06 COMMUNITY RELATIONS:

A. The Administration will establish a program of public contact for conducting effective relationships with communities and businesses in proximity to construction areas. As part of these programs the Contractor shall establish and maintain continuing liaison with persons occupying property or doing business in the immediate area of the Worksite for the purpose of minimizing inconveniences resulting from construction.

B. The Contractor shall contact those residents or businessmen who might reasonably be expected to be affected by the construction and make known to them the name of the Contractor representative on the Worksite

with responsibility for community relations and explain to them the means by which the representative can be contacted expeditiously.

C. The Contractor shall, as part of the monthly progress status report specified in Section 01300, note and explain all community relations activities undertaken during the report period.

1.07 CONSTRUCTION OPERATIONS UNDER TRAFFIC:

A. General: Construction equipment is defined for the purpose of this article as all types of equipment, vehicles, and tools used in connection with construction work. The term workmen includes every person or firm performing work in or adjacent to public streets.

B. Construction Equipment: When in traffic lanes, all vehicles and equipment shall be operated at normal traffic speeds. If this is not practicable, a slow moving vehicle emblem must be displayed in accordance with Article 66½ (Motor Vehicle Code), Annotated Code of the State of Maryland. Construction equipment shall not be parked in any lane intended for use by normal traffic. Equipment parked or stored at the work site shall be behind a guardrail, barrier, curb or other protective device.

C. One-Way Traffic: No construction equipment shall be operated on traffic lanes, except in the designated direction of travel for respective lanes.

D. Construction Operations:

1. No construction work involving occupancy of traffic lanes shall be performed during adverse weather conditions or adverse road conditions except when so authorized by the Engineer and traffic shall be properly safeguarded by the use of flashers, and lights in addition to the signs and other markings prescribed herein. During these periods, no construction deliveries shall take place over a travel lane or immediately adjacent thereto.

2. When traffic conditions dictate, the Engineer may require the Contractor to modify his work operation for such length of time as required to alleviate the hazardous traffic conditions.

E. Equipment Travel:

1. No construction equipment other than that designed and used for general highway transportation shall be moved on streets during hours of darkness, periods of adverse weather conditions which

reduce normal visibility, or when the roadway is covered with snow or ice.

2. Any construction equipment or material required in construction which exceeds the maximum vehicle dimensions enumerated in Article 66½ (Motor Vehicle Code), shall be moved only in accordance with the established State and local regulations. No such oversized load shall be moved over streets of the local jurisdictional agency without first obtaining the approval of the appropriate agency.

F. Crossing Traffic Lanes: When crossing open traffic lanes by construction equipment is necessary, such crossing shall be safeguarded with flagmen.

G. Flagmen: Provide qualified flagmen thoroughly instructed in flagging procedures as required to safeguard and maintain vehicle and pedestrian traffic. All flagmen shall perform their duties courteously and in such manner as will insure the safety and convenience of the traffic within the limits of the guarded area. Traffic shall not be flagged to a stop unless such is necessary for safety. Flagmen shall be supplied with flares for adverse weather conditions and with red flag not less than 24 inches square for slowing or directing traffic to another lane. Flagmen shall wear fluorescent orange safety vests and yellow hard hats.

H. Removal of traffic Control Devices: All temporary signs, barricades, barrier curbs, drums, and cones used for safeguard traffic in connection with construction work shall be removed at the close of the work day, unless the state of the work is such that warning devices are still needed and are adapted for night closing. In such cases notify the Engineer reasonably in advance of the normal quitting time that he may review the status of the work and request additional safety measures as he deems necessary.

I. Storage: No material shall be stored on any lane intended for traffic use.

1.08 WORK AND STORAGE AREAS:

A. Section 01110 of the Special Provisions will describe work areas available to Contractor for work and storage areas. Additional work and storage space, if required, shall be provided by the Contractor at his own expense. Parking facilities for Contractor's personnel shall be the Contractor's responsibility.

1.09 SAFETY REQUIREMENTS:

A. Refer to the General Provisions Section GP-7 for safety and health requirements.

B. Employ and assign to the work a full-time Safety Superintendent who has the specialized training and experience in construction safety supervision, is thoroughly familiar with OSHA requirements, and is acceptable to the Engineer. Employ the Safety Superintendent exclusively for purpose of supervising the safety of persons on or about the work and property affected thereby.

C. First Aid Stations: At site of the work, establish and fully equip a first aid station. Maintain a qualified first aid attendant on duty in the station at all times when the work is in progress, except when on emergency calls.

1.10 POLLUTION ABATEMENT:

A. General: Refer to General Provisions GP-7. Conduct operations in a manner to minimize pollution of the environment surrounding the area of work by every means possible. Apply specific controls as follows:

1. Material Transport: Truck leaving the site and entering paved public streets shall be cleaned of mud and dirt clinging to body and wheels of the vehicle. Trucks arriving at and leaving the site with materials shall be loaded in a manner, which will prevent dropping of materials or debris on the streets. Contractor shall maintain a suitable vehicle cleaning and inspection installation with permanent crew for this purpose. Spills of materials in public areas shall be removed immediately at no additional cost to the Administration.

2. Waste Materials: No waste or erosion materials shall be allowed to enter natural or man-made water or sewage removal systems. Erosion materials from excavations, borrow areas or stockpiled fill shall be contained within the work area. Contractor shall develop methods for control of waste and erosion, which shall include such means as filtration, settlement and manual removal.

3. Burning: No burning of waste will be allowed.

4. Dust Control: the Contractor shall at all times control the generation of dust by his operations. Control of dust is mandatory and shall be accomplished by water sprinkling or by other methods approved by the Engineer.

5. Noise Control:

a. General: Minimize noise caused by work operations, and provide working machinery and equipment fitted with efficient noise suppression devices. Employ other noise abatement measures necessary for protection of both employees and the public. In addition, restrict working hours and schedule operations in a manner that will minimize to the greatest extent feasible, disturbance to residents in the vicinity of the work. Provide protection against noise exposure for employees in accordance with GP 7.05.

b. Definitions:

i. Daytime, refers to the period from 7:00 a.m. to 10:00 p.m. local time daily except Sundays and legal holidays. Nighttime, refers to all other times including all day Sunday and legal holidays.

ii. Construction Limits are defined for the purpose of these noise control requirements as the Administrations right-of-way lines or property lines as indicated on the drawings.

iii. Zones, Special Zones and special Construction sites outside of Construction Limits shall be designated by the local agency having jurisdiction.

c. Monitoring: Monitor noise levels of work operations to assure compliance with the noise limitations contained herein. Retain record of noise measurements for inspection by the Engineer. Promptly inform the Engineer of any complaints received from the public regarding noise. Describe the action proposed and the schedule for implementation and subsequently inform the Engineer of the results of the action.

d. Measurement Procedure:

i. Except where otherwise indicated, perform all noise measurements using the A-weight network and (slow) response of an instrument complying with the criteria for Type 2 General Purpose sound level meter as described in ANSI S1.4. Measure impulsive or impact noises with an impulse sound level meter complying with the criteria of IEC 179 for impulse sound level meters. As an alternative procedure, a type 2 General Purpose sound level meter

on C-weighting and (fast) response may be used to estimate peak values of impulsive or impact noises. Transient meter indications of 125 dbC (fast) or higher will be considered as indications of impulsive noise levels of 140 db or greater.

ii. Measure noise level at buildings affected acoustically by the Contractor's operations at points between three feet and six feet from the building face to minimize the effect of reflections.

iii. Measure noise levels at points on the outer boundaries of Construction Limits or Special Construction Sites for noise emanating from within.

iv. Where more than one criteria of noise limits are applicable, use the more restrictive requirement for determining compliance.

e. Noise Restrictions: Noise restrictions shall be in accordance with local ordinances.

B. Maintaining Flow of Sewers and Drains: The Contractor shall, at his own expense, provide for and maintain the flow of all sewers, drains, house or inlet connections, and all water courses which may be met during progress of the work. The Contractor shall not allow the contents of any sewer, drain, or house or inlet connection to flow into trenches. The Contractor shall, at his own expense, immediately remove from proximity of the work all offensive matter; using such precautions as are required by the Engineer.

1.11 HISTORICAL AND SCIENTIFIC SPECIMENS:

A. All articles of historical or scientific value, including coins, fossils, and articles of antiquity, which may be uncovered by Contractor during progress of the work, shall become the property of the Administration. Such findings shall be reported immediately to the Engineer who will determine method of removal, where necessary, and final disposition thereof.

1.12 SALVAGE MATERIALS AND EQUIPMENT:

A. The Contractor shall maintain adequate property control records for materials and equipment specified to be salvaged. Contractor shall be responsible for the adequate storage and protection of salvaged materials and equipment. The Contractor shall replace, at no cost to the Administration, salvage materials

and equipment which are broken or damaged during the salvage operations as the result of the Contractor's negligence.

B. Salvage material not specified for reuse shall be the property of the Contractor and shall be removed from the site.

PART 2: PRODUCTS

NOT USED

PART 3: EXECUTION

NOT USED

PART 4: MEASUREMENT AND PAYMENT

4.01 TEMPORARY FACILITIES AND CONTROLS:

A. The temporary facilities and controls work required under this Section will not be measured.

B. All costs in connection herewith will not be paid for directly, but will be considered incidental to the item of work to which they pertain.

1. Temporary utility service
2. Temporary sanitary facilities
3. Protection of existing facilities
4. Work and Storage area
5. Community relations
6. Safety requirements
7. Pollution abatement
8. Salvage materials and equipment

END OF SECTION

SECTION 02650

MISCELLANEOUS STRUCTURES

PART 1: GENERAL

1.01 DESCRIPTION:

A. The work under this Section shall consist of furnishing and installing a Class V Reinforced Concrete Circular Pipe to be utilized as a sleeve for a future Baltimore City 12-inch water line located between the Union Avenue and Clipper Access Road grade crossings. The work also includes the following:

1. Constructing and installing concrete pipe plugs to seal pipe ends.
2. Placing discs or other type markers on top of existing ground to mark the location of the pipe sleeve for future access.

B. The pipe sleeve layout shown on the drawings traverses under the existing MTA systems ductbank crossing Union Avenue. Provisions are included for a test pit to be performed by the Contractor prior to pipe sleeve installation to verify the location and elevation of the existing MTA Systems ductbank.

C. The Contractor shall remove all designated temporary support systems, and leave in place the excavation support systems as shown on the Contractor's approved working drawings, or as otherwise directed by the Engineer.

1.02 QUALITY ASSURANCE:

A. Description – City of Baltimore Specifications

1. Section 33 41 00.

B. Field Testing – City of Baltimore Specifications.

1. Section 33 41 00.

C. Submittals: In accordance with Section 01300 Submittals of these Special Provisions.

1. Submit Certificate(s) of compliance stating that the item(s) supplied is in accordance with the requirements specified herein.
2. Submit list of materials to be supplied and name of suppliers.

1.03 NOTIFICATION:

A. Before performing any work on or in vicinity of City of Baltimore, DPW owned or City of Baltimore Health Department owned underground utilities and storm drains, notify in writing the Baltimore City Department of Public Works, at least two weeks prior to commencement of work.

PART 2: PRODUCTS

2.01 MATERIALS:

A. Concrete for pipe end plugs shall meet the requirements of SHA Standard Specifications for Construction and Materials Mix No. 1, 2,500 psi (28-day compressive strength)

B. Grout for sealing pipe joints shall meet the requirements of SHA Standard Specifications for Construction and Materials, Section 902.11.

C. Reinforced Concrete Pipe shall meet the requirements of Baltimore City Specification Section 33 41 00. Class V as indicated on the Contract Drawings.

D. Underground marking tape shall be blue, six inch wide, four mil thick, polyethylene tape with black lettering with the following wording: "Caution: Waterline Buried Below." Marking tape shall be installed 12 inches above the top of the concrete sleeve.

E. Roadway Box and Roadway Box Lids shall meet the requirements of Baltimore City Specification Section 33 12 16.

PART 3: EXECUTION

3.01 DESCRIPTION:

A. City of Baltimore Specifications 33 41 00.

3.02 CONSTRUCTION SEQUENCE:

A. Pipe length and invert elevation shall be verified by the Contractor and shall be acceptable to the Engineer prior to installation.

B. When a pipe is laid on existing ground, on fill, or under fill, the embankment shall be constructed to a height of at least 9 in., but not more than 3 ft. above the top of the proposed pipe and then a trench shall be excavated to receive the pipe.

C. Underground drainage structures and pipe relocations shall be fully completed and made operational prior to excavations for pipe construction.

D. Underground drainage structures shall be completed before paving surface is placed. Manholes and inlets shall not be completed to final grade until the grading has been finished and all necessary arrangements have been made to insure suitable connections and tie-ins at proper grade and alignment with pavements, curbs, and gutters.

3.03 PIPE INSTALLATION:

A. Excavation: In accordance with Baltimore City Specification Section 33 23 33, except as modified herein. The width of trench shall be sufficient to permit thorough tamping of the backfill under the haunches and around the pipe. This width shall not be less than twice the outside diameter of the pipe or the outside diameter plus 18 in. on each side, whichever is less.

B. Bedding: Pipe encasement shall be constructed on gravel bedding in accordance with Baltimore City Book of Standards "St'd. No. BC 302.01. When unsuitable foundation material is encountered, it shall be removed and replaced with select backfill for the full width of the trench, as directed by the Engineer.

C. Installation: In accordance with Baltimore City Specifications Section 33 41 00, except as modified herein. Pipes shall be laid to invert shown on the drawings. A single hole through the shell of the pipe will be permitted for use with an approved lifting device. After installation, the lay hole shall be sealed.

D. Joints: Asphalt sealer, rubber type gaskets or resilient type material shall be used for storm drain pipe. Care shall be exercised to insure the proper application of sealer on the underside of all joints. Unless otherwise specified in the Contract Documents, these materials shall be installed as recommended by the manufacturer.

E. Install pipe end plugs as shown on the drawings.

F. Backfill: In accordance with Baltimore City Specifications Section 33 41 00, except as modified herein. Earth for backfill shall be free from large lumps, clods, and rocks and shall be placed along the side of the pipe for the full width of the trench in layers not exceeding 6 inches in uncompacted depth. Compaction shall conform to the requirements of Section 02317. Each layer shall be compacted simultaneously on both sides of the pipe by means of an approved mechanical tamper. Special

care shall be taken to compact the fill thoroughly under the haunches of the pipe.

G. Pipe Markers: Install Baltimore City Standard Roadway Box (BC Std. 872.01) and Roadway Box Lid (BC Std. 872.01C) at both ends of the pipe sleeve.

PART 4: MEASUREMENT AND PAYMENT

4.01 24 INCH REINFORCED CONCRETE CIRCULAR PIPE, CLASS V PIPE SLEEVE

A. 24 inch Reinforced Concrete Circular Pipe Class V Pipe Sleeve shall be measured per Linear Feet of pipe furnished and installed in accordance with the drawings and approved by the Engineer.

B. 24 inch Reinforced Concrete Circular Pipe Class V Pipe Sleeve shall be paid for at the Contract unit price per Linear Feet, which compensation shall be full compensation for all applicable excavation, excavation support, dewatering, construction of concrete encasement, additional support measures over MTA systems ductbank, joint sealing, furnishing and installing pipe end plugs, furnishing and installing pipe markers, storing and handling of material, removal and disposal of excess and unsuitable material, tamped fill, forming pipe bed or foundation, bedding material, backfill, compaction, inspection, and for all material, labor, equipment, tools, and incidentals necessary to complete the work.

END OF SECTION

SECTION 16647
TRACK-TO-EARTH RESISTANCE TESTING

PART 1: GENERAL

1.01 DESCRIPTION:

A. This Section includes specifications for testing restored trackwork to determine resistance-to-earth characteristics of running rails. The purpose of this testing is to ensure that sufficient resistance between rails and earth is established to avoid large magnitude stray currents that would cause corrosion damage to underground metallic structures.

B. Track to Earth Resistance Testing shall be performed at the Union Avenue and Clipper Road grade crossings and the adjacent new ballasted track sections.

C. For the purposes of this Section, all references to the Engineer shall refer to the designated MTA representative.

1.02 QUALITY ASSURANCE

A. The Contractor or specialized subcontractor shall have extensive experience in the work defined in this Section with five years of documented experience in performing all indicated testing.

B. The supervisor assigned to this work shall have a NACE International certification number and be a certified Cathodic Protection specialist.

C. The supervisor shall have a minimum of three years of documented experience in responsible charge of work similar to that of this Section. The documented work experience shall include, specifically, performance of Track-to-Earth Resistance Testing on electrified railroads.

D. On-site testing shall be under the direct supervision of an individual with a minimum NACE International certification of Corrosion Technologist. The on-site testing supervisor shall have a minimum of three (3) years documented work experience which shall specifically include the performance of Track-to-Earth Resistance Testing on electrified railroads.

1.03 SUBMITTALS:

A. Qualifications of testing firm and supervisor in accordance with Article 1.02 herein.

B. Test Methods and Equipment:

1. Complete description of proposed testing procedures.

2. List of testing instruments, providing the following data:

   a. Manufacturer's name.

   b. Model number.

   c. Serial number.

   d. Calibration certificate showing instrument was calibrated within the past year by an independent agency.

C. Test Reports: in accordance with Article 3.01.E herein.

PART 2: PRODUCTS

NOT USED

PART 3: EXECUTION

3.01 GENERAL:

A. Visual Inspections: Visually examine the track to ensure that there is no debris, water, dirt, or other conductive material in electrical contact with the track or track components which could lower the effective track-to-earth resistance. This includes making certain that ballast is clear of contacting the bottom of the rail. Record the condition of the track section to be tested on the test report data sheet.

B. Test Procedure:

1. Perform all testing in accordance with methods and equipment approved by the Engineer. Testing shall be made after completion of the elastomeric grade crossing installation and connection of adjoining ballasted track sections.

2. Test procedures specified herein may be modified to suit actual field conditions, subject to the Engineer's approval.

C. Scheduling Tests: See Section 01150 Interface Requirements for track access requirements..

D. Initial Tests:

1. The number of readings taken to determine an electrical constant or property shall be sufficient to ensure that random factors due to human error in reading the instruments and transient disturbances in

the electrical network have negligible influence on the final results. Examine the data to see if removal of either the highest or lowest value will not alter the arithmetic average of the group by more than five percent. Should the average be altered by more than five percent, take one more set of data and combine the results with the first set. If the average of this combined data is still more than five percent, after again removing the highest or lowest value, an unstable condition is indicated, and the trackwork installation shall be examined to determine corrective action to be taken.

2. The Engineer will observe the initial tests. Should they appear valid after two trials, the testing procedures will be approved, and shall not be varied without written approval of the Engineer.

E. Documentation: Reports for each track section tested showing all test data and calculations, including temperature and precipitation during actual testing for preceding three days. All test data sheets shall include the signature of the Test Supervisor and NACE certification number. Photocopies of the actual field data sheets are to be included in any report.

3.02 TEST INSTRUMENTATION AND EQUIPMENT: Provide the following in accordance with the approved list as specified in Article 1.03.B.2:

A. Voltmeter, dc: Multi-scale, minimum input impedance of 100,000 ohms/volt, accurate to within two percent of full scale. Full-scale response time shall be no more than 0.5 second. Full scale ranges shall be as follows:

- 0 to 10 millivolts
- 0 to 100 millivolts
- 0 to 1 volt
- 0 to 10 volts
- 0 to 100 volts

B. Ammeter, dc: Multi-scale, maximum shunt voltage drop of 20 millivolts, accurate to within two percent of full scale, with the following full scale ranges:

- 0 to 1 ampere
- 0 to 10 amperes

Note: The voltmeter and ammeter may be combined into a single package for convenience.

C. Milliammeter, dc: Multi-scale, maximum shunt voltage drop of 20 Millivolts, accurate to within two percent of full scale, with the following full scale ranges:

- 0 to 10 milliamperes
- 0 to 100 milliamperes

Note: The ammeter and milliammeter may be combined into a single unit for convenience.

D. Shunts: An alternative to the ammeter and milliammeter is a millivolt meter and external shunts covering the listed current ranges. If used, meter and shunt combinations shall be accurate to within two percent of full scale, covering the full scale ranges listed in Paragraphs A and B above.

E. Ohmmeter: Multi-scale, accurate to within two percent of full scale, with a resolution of 0.1 ohm to 20 megohms.

F. DC Power Source: Six or twelve volt automotive type wet cell battery. For circuits having a high internal resistance, two or more batteries may be required.

G. Test wires: Single conductor cable, stranded copper, AWG Nos. 12 and 18. Wires shall have a minimum 600 volt neoprene insulation in perfect condition. Provide sufficient length(s) as required to establish test circuits with appropriate terminal lugs and clamp or clip terminations.

H. Reference Electrode: Saturated copper-copper sulfate reference half-cell with a length of five inches and a ceramic porous plug, diameter of 1-3/8 inches or 3 inches.

I. Electrical Contact Locator: Tinker and Rasor, Model PD, Pearson Detector or approved equal.

J. Megohmmeter and Earth Tester: AVO, Major Megger Tester Model 212459 and null balance earth tester Model DET5/4D or approved equal.

K. Miscellaneous Tools: As required for making wire connections, splicing; and other related work.

3.03 ELECTRICAL TESTS OF MAINLINE TRACKWORK:

A. Electrically test all restored trackwork areas. Use Method 1 and/or Method 2 for discrete, electrically separate sections of track, where running rail insulating joints have been installed for signaling purposes, and where track sections adjacent to the particular section under test have not yet been installed. Use Method 3 for testing track sections, which are electrically and physically interconnected to adjacent track sections. Use

Method 4 for testing double crossover sections of track. Use method 5 for testing single crossover sections of track. The purpose of these procedures is to establish the basic electrical test connections for the track-to-earth resistance measurements and present the appropriate resistance formulae. Variations in actual track configurations to be tested will occur.

B. Method 1-Electrically Separate Track Sections: Refer to Drawing No. 1 for test instrumentation setups. Modify setup as required to suit actual field conditions.

1. Establish a test circuit between the rail under test and a low resistance earth contact.

2. Measure the circuit resistance (R_m) using the lowest readable scale on the resistance meter.

3. Calculate the track-to-earth resistance per 1,000 feet of rail pairs using the equation:

$$R_T = R_m \times L/2 = \text{ohms / 1,000 feet of track (2 rails)}$$

Where,

L = Length of test section in increments of 1,000 feet

C. Method 2 - Electrically Separate Track Sections: Refer to Drawing No. 2. for test instrumentation setup. Modify setup as required to suit actual field conditions.

1. Ensure electrical continuity between the rails of the track section being tested by using existing cables, or by installing temporary wire connections between the rails at both ends of the track section.

2. Establish a current circuit (I_1) between the rails and a low resistance earth contact and a rail-to-earth voltage measuring circuit (Vg_1) using a copper – copper sulfate reference electrode in contact with earth. Do not use the same ground contact used for the voltage measuring circuit for the current circuit contact.

3. With the current circuit (I_1) closed, reduce the meter ranges of both the current and voltage circuits until the lowest readable scales are reached and record the current "on" values.

4. Open the current circuit (I_1) and immediately record the "off" values for the current and voltage circuits. Repeat at least three times for accuracy.

5. Calculate the change in potential, ΔVg_1 and the change in current, δI_1 for each reading ($\Delta I_1 = I_{on} - I_{off}$ etc.).

6. Calculate the effective track-to-earth resistance by dividing the summation of the change in potential, $\Sigma \Delta Vg_1$, by the summation of the change in current, $\Sigma \Delta I_1$.

   $RVg_{1-1} = \Sigma \Delta Vg_1 / \Sigma \Delta I_1 = volt / ampere$

7. Obtain track-to-earth data at the opposite end of the track section under test.

   $RVg_{2-1} = \Sigma \Delta Vg_2 / \Sigma \Delta I_1 = volt / ampere$

   Compare RVg_{2-1}, with RVg_{1-1}. A difference greater than five percent could indicate attenuation resulting from the relationship of the track section's longitudinal resistance and the track-to-earth resistance. A significant variation between RVg_{2-1} with RVg_{1-1} can be expected if the track-to-earth resistance falls below acceptable levels.

8. Determine the effectiveness of the rail insulating joints (if applicable) at both ends of the track section by obtaining the following data as shown in Drawing No. 2:

   $R_{E1-1} = \Sigma \Delta_{E1} / \Sigma \Delta I_1 = volt / ampere$

   and

   $R_{E2-1} = \Sigma \Delta_{E2} / \Sigma \Delta I_1 = volt / ampere$

   Compare R_{E1-1} with Rvg_{1-1} and R_{E2-1} with RVg_{2-1}. Measured values should be within plus or minus five percent of RVg_{1-1} or RVg_{2-1}. Deviations greater than five percent most likely indicate a defective rail insulating joint at the specific locations where the measurement was made and will require further investigation.

9. Calculate average resistance to earth of the test section:

   $R_{avg} = (RVg_{1-1} + RVg_{2-1}) / 2 = ohms$

   and multiply by the length of the test section in increments of 1,000 feet.

   $R_T = R_{avg} \times L = ohms / 1{,}000 \text{ feet of track (2 rails)}$

   Where:

   L = Length of test section in increments of 1,000 feet

D. Method 3 – Electrically Interconnected Track Sections: Refer to Drawing No. 3 for instrumentation setup. Modify setup as required to suit actual field conditions.

1. Establish a current circuit (I_1) between the track system and a low-resistant earth contact and a track-to-earth voltage measuring circuit (Vg_1) using a copper – copper sulfate reference electrode in contact with earth. Do not use the same voltage circuit earth contact for the current circuit contact.

2. With the current circuit (I_1) closed, reduce the meter ranges of both circuits until the lowest readable scales are reached and record the "on" values for current and voltage.

3. Open the current circuit (I_1) and immediately record the "off" values for current and voltage. Repeat at least three times for accuracy.

4. Calculate the effective track-to-earth resistance by dividing the summation of change in voltage, $\Sigma\Delta Vg_1$ by the summation of change in current, $\Sigma\Delta I_1$.

   $RVg_{1\text{-}1} = \Sigma\Delta Vg_1 / \Sigma\Delta I_1 = volt\ /\ ampere$

   This resistance value represents the apparent resistance of the track section under test in parallel with the adjacent track sections. Usually the composite resistance-to-earth of the adjacent track sections will be lower than that of the test section because of the greater amount of trackage involved.

5. Obtain additional track-to-earth couplings at other locations as indicated in Figure 3.

   $RVg_{2\text{-}1} = \Sigma\Delta Vg_2 / \Sigma\Delta I_1 = volt\ /\ ampere$

   $RVg_{3\text{-}1} = \Sigma\Delta Vg_3 / \Sigma\Delta I_1 = volt\ /\ ampere$

6. Maintaining the current circuit (I_1), measure the percentage of change in current flow on the rail at the locations specified in Drawing No. 3 using a maximum of 50 feet of rail as a current measuring shunt. Calculate the current percentage as follows:

   $\%I_{1\text{-}1} = (\Sigma\Delta_{Emv1}\ x\ K_R\ x100) / \Sigma\ \Delta I_1$

   Where:

$\%I_{1-1}$ = Percentage of I_1, at location "E_{mv1}"

$\Sigma\Delta_{Emv1}$ = Summation of change in E_{mv1} caused by I_1, for the total number of readings taken (millivolts)

$\Sigma\Delta I_1$ = Summation of change in I_1 for the total number of readings taken (amperes)

K_R = Conversion factor for the millivolt shunt circuit (amperes/millivolt):

K_R = 1/(L x RR x 1,000 MV/V)

L = Length of rail used for the millivolt shunt circuit (feet)

R_R = Longitudinal resistance of running rail per one foot length (ohms/foot)

Note: Using theoretical resistance values of 8.68×10^{-6} ohm/foot for 115-lb rail, theoretical K_R values for a 50-foot span of single rail are:

K_R = 2.30 amperes/millivolt (115-lb rail)

Obtain a sufficient sampling of actual longitudinal resistance factors to establish a statistical mean value for K_R used in the preceding calculations.

7. Obtain current flow percentages at the locations specified in Drawing No. 3. Calculate the following:

$\%I_{2-1}=(\Sigma\Delta_{Emv2} \times K_R \times 100) / \Sigma\Delta I_1$

$\%I_{3-1}=(\Sigma\Delta_{Emv3} \times K_R \times 100) / \Sigma\Delta I_1$

$\%I_{4-1}=(\Sigma\Delta_{Emv4} \times K_R \times 100) / \Sigma\Delta I_1$

$\%I_{5-1}=(\Sigma\Delta_{Emv5} \times K_R \times 100) / \Sigma\Delta I_1$

$\%I_{6-1}=(\Sigma\Delta_{Emv6} \times K_R \times 100) / \Sigma\Delta I_1$

$\%I_{7-1}=(\Sigma\Delta_{Emv7} \times K_R \times 100) / \Sigma\Delta I_1$

$\%I_{8-1}=(\Sigma\Delta_{Emv8} \times K_R \times 100) / \Sigma\Delta I_1$

and,

$\% I_{S-1}= \%I_{1-1} + \%I_{2-1} + \%I_{3-1} + \%I_{4-1}$

$\%I_{R-1}= \%I_{5-1} + \%I_{6-1} + \%I_{7-1} + \%I_{8-1}$

A significant difference between the values obtained for $\% I_{1-1}$ through $\% I_{4-1}$, and/or between the values obtained for $\% I_{5-1}$

through % I_{8-1}, may indicate that the electrical conductance-to-earth is not uniform over the entire track section being evaluated.

8. Calculate the average resistance-to-earth of the test section:

$$R_{avg} = (RVg_{1-1} + RVg_{2-1} + RVg_{3-1} / (\% I_{S-1} - \% I_{R-1})$$

Where:

% I_{S-1}, and % I_{R-1} are expressed as decimals.

9. Calculate the average track-to-earth resistance for the test section on a 1,000 foot of track basis (2 rails).

$$R_T = R_{AVG} \times L \times 2 = \text{ohms /1,000 feet of track (2 rails)}$$

Where:

L = Length of track in increments of 1,000 feet.

E. Method 4 – Double Crossover Track Sections: Refer to Drawing No. 4. for test instrumentation setup. Modify setup as required to suit actual field conditions.

1. Ensure electrical continuity between the rails of the track section being tested by using existing cables, or by installing temporary wire connections between the rails at both ends of the track section.

2. Establish a current circuit (I_1) between the rails and a low resistance earth contact and a rail-to-earth voltage measuring circuit (Vg_1) using a copper – copper sulfate reference electrode in contact with earth. Do not use the same ground contact used for the voltage measuring circuit for the current circuit contact.

3. With the current circuit (I_1) closed, reduce the meter ranges of both the current and voltage circuits until the lowest readable scales are reached and record the current "on" values.

4. Open the current circuit (I_1) and immediately record the "off" values for the current and voltage circuits. Repeat at least three times for accuracy.

5. Calculate the change in potential, ΔVg_1 and the change in current, δI_1 for each reading ($\Delta I_1 = I_{on} - I_{off}$ etc.).

6. Calculate the effective track-to-earth resistance by dividing the summation of the change in potential, $\Sigma\Delta Vg_1$, by the summation of the change in current, $\Sigma\Delta I_1$.

$RVg_{1\text{-}1} = \Sigma\Delta Vg_1 / \Sigma\Delta I_1 = volt / ampere$

7. Obtain track-to-earth data at the other ends of the double crossover track section under test.

$RVg_{2\text{-}1} = \Sigma\Delta Vg_2 / \Sigma\Delta I_1 = volt / ampere$

$RVg_{3\text{-}1} = \Sigma\Delta Vg_3 / \Sigma\Delta I_1 = volt / ampere$

$RVg_{4\text{-}1} = \Sigma\Delta Vg_4 / \Sigma\Delta I_1 = volt / ampere$

Compare $RVg_{2\text{-}1}$, $RVg_{3\text{-}1}$, and $RVg_{4\text{-}1}$, with $RVg_{1\text{-}1}$. A difference greater than five percent could indicate attenuation resulting from the relationship of the track section's longitudinal resistance and the track-to-earth resistance. A significant variation between $RVg_{2\text{-}1}$ with $RVg_{1\text{-}1}$ can be expected if the track-to-earth resistance falls below acceptable levels.

8. Determine the effectiveness of the rail insulating joints (if applicable) at both ends of the track section by obtaining the following data as shown in Drawing No. 2:

$R_{E1\text{-}1} = \Sigma\Delta_{E1} / \Sigma\Delta I_1 = volt / ampere$

$R_{E2\text{-}1} = \Sigma\Delta_{E2} / \Sigma\Delta I_1 = volt / ampere$

$R_{E3\text{-}1} = \Sigma D_{E3} / \Sigma D I_1 = volt / ampere$

$R_{E4\text{-}1} = \Sigma D_{E4} / \Sigma D I_1 = volt / ampere$

Compare $R_{E1\text{-}1}$ with $Rvg_{1\text{-}1}$ and $R_{E2\text{-}1}$ with $RVg_{2\text{-}1}$. Measured values should be within plus or minus five percent of $RVg_{1\text{-}1}$ or $RVg_{2\text{-}1}$. Deviations greater than five percent most likely indicate a defective rail insulating joint at the specific locations where the measurement was made and will require further investigation.

9. Calculate average resistance to earth of the test section:

$R_{avg} = (RVg_{1\text{-}1} + RVg_{2\text{-}1} + RVg_{3\text{-}1} + RVg_{4\text{-}1}) / 4 = ohms$

and multiply by the length of the track in the double crossover on increments of 1,000 feet.

$R_T = R_{avg} \times L$ = *ohms /1,000 feet of track (2 rails)*

Where:

L = Length of test section in increments of 1,000 feet

F. Method 5 – Single Crossover Track Sections: Refer to Drawing No. 5. for test instrumentation setup. Modify setup as required to suit actual field conditions.

1. Ensure electrical continuity between the rails of the track section being tested by using existing cables, or by installing temporary wire connections between the signal and negative rails at one end of the track section.

2. Open the circuit breaker in the Central Instrument House (CIH) corresponding to the PF track circuit for the crossover being tested.

3. Establish a current circuit (I_1) between the rails and a low resistance earth contact and a rail-to-earth voltage measuring circuit (Vg_1) using a copper – copper sulfate reference electrode in contact with earth.. Do not use the same ground contact used for the voltage measuring circuit for the current circuit contact.

4. With the current circuit (I_1) closed, reduce the meter ranges of both the current and voltage circuits until the lowest readable scales are reached and record the current "on" values.

5. Open the current circuit (I_1) and immediately record the "off" values for the current and voltage circuits. Repeat at least three times for accuracy.

6. Calculate the change in potential, ΔVg_1 and the change in current, δI_1 for each reading ($\Delta I_1 = I_{on} - I_{off}$ etc.).

7. Calculate the effective track-to-earth resistance by dividing the summation of the change in potential, $\Sigma \Delta Vg_1$, by the summation of the change in current, $\Sigma \Delta I_1$.

   $RVg_{1-1} = \Sigma \Delta Vg_1 / \Sigma \Delta I_1$ = *volt / ampere*

8. Obtain track-to-earth data at the other ends of the double crossover track section under test.

   $RVg_{2-1} = \Sigma \Delta Vg_2 / \Sigma \Delta I_1$ = *volt / ampere*

$RVg_{3-1} = \Sigma\Delta Vg_3/\Sigma\Delta I_1$ = *volt / ampere*

Compare RVg_{2-1}, and RVg_{3-1} with RVg_{1-1}. A difference greater than five percent could indicate attenuation resulting from the relationship of the track section's longitudinal resistance and the track-to-earth resistance. A significant variation between track-to-earth resistance values can be expected if the track-to-earth resistance falls below acceptable levels.

9. Determine the effectiveness of the rail insulating joints (if applicable) at both ends of the track section by obtaining the following data as shown in Drawing No. 2:

$R_{E1-1} = \Sigma\Delta_{E1}/\Sigma\Delta I_1$ = *volt / ampere*

$R_{E2-1} = \Sigma\Delta_{E2}/\Sigma\Delta I_1$ = *volt / ampere*

$R_{E3-1} = \Sigma D_{E3}/\Sigma D I_1$ = *volt / ampere*

Compare R_{E1-1} with Rvg_{1-1}, R_{E2-1} with RVg_{2-1} and so on. Measured values should be within plus or minus five percent. Deviations greater than five percent most likely indicate a defective rail insulating joint at the specific location(s) where the measurement was made and will require further investigation.

10. Calculate average resistance to earth of the test section:

$R_{avg} = (RVg_{1-1} + RVg_{2-1} + RVg_{3-1})/3$ = *ohms*

and multiply by the length of the track in the double crossover on increments of 1,000 feet.

$R_T = R_{avg} \times L$ = *ohms /1,000 feet of track (2 rails)*

Where:

L = Length of test section in increments of 1,000 feet

G. Other Track Sections: Siding tracks, yard tracks, and other special sections of track will require detailed inspection prior to testing to determine the location of insulating joints, crossbonds, traction power substation negative returns, etc.

3.04 ACCEPTANCE CRITERIA:

A. Unless otherwise approved, the following are the minimum acceptable in-service track-to-earth resistances:

1. Direct Fixation Track (all locations/types): 1,000 ohms for 1,000 feet of single track (2 rails).

2. Ballasted Track (all locations/types): 500 ohms for 1,000 feet of single track (2 rails).

3. Embedded Track (all locations/types): 100 ohms for 1,000 feet of single track (2 rails).

B. If the test results show that any section of trackwork fails to meet the acceptance criteria, check all instrumentation setups; verify that the equipment is operating properly; inspect the section under test for installation deficiencies; and correct any problems detected, including cleaning of the trackwork to ensure proper data collection. Following this procedure, repeat the tests as soon as possible. If the retesting results in failure to meet acceptance criteria, correct the cause for failure and repeat testing until satisfactory results are obtained.

PART 4: MEASUREMENT AND PAYMENT

4.01 TRACK-TO-EARTH RESISTANCE TESTING:

A. Track-to-Earth Resistance Testing shall not be measured.

B. Track-to-Earth Resistance Testing will be paid for at the Contract Lump Sum price which includes track-to-earth and associated rail-to-rail testing at each grade crossing site and the adjacent new ballasted track sections. The Payment will be full compensation for all equipment rental costs, testing of cables and related equipment, setup, dismantling, analysis, and reports.

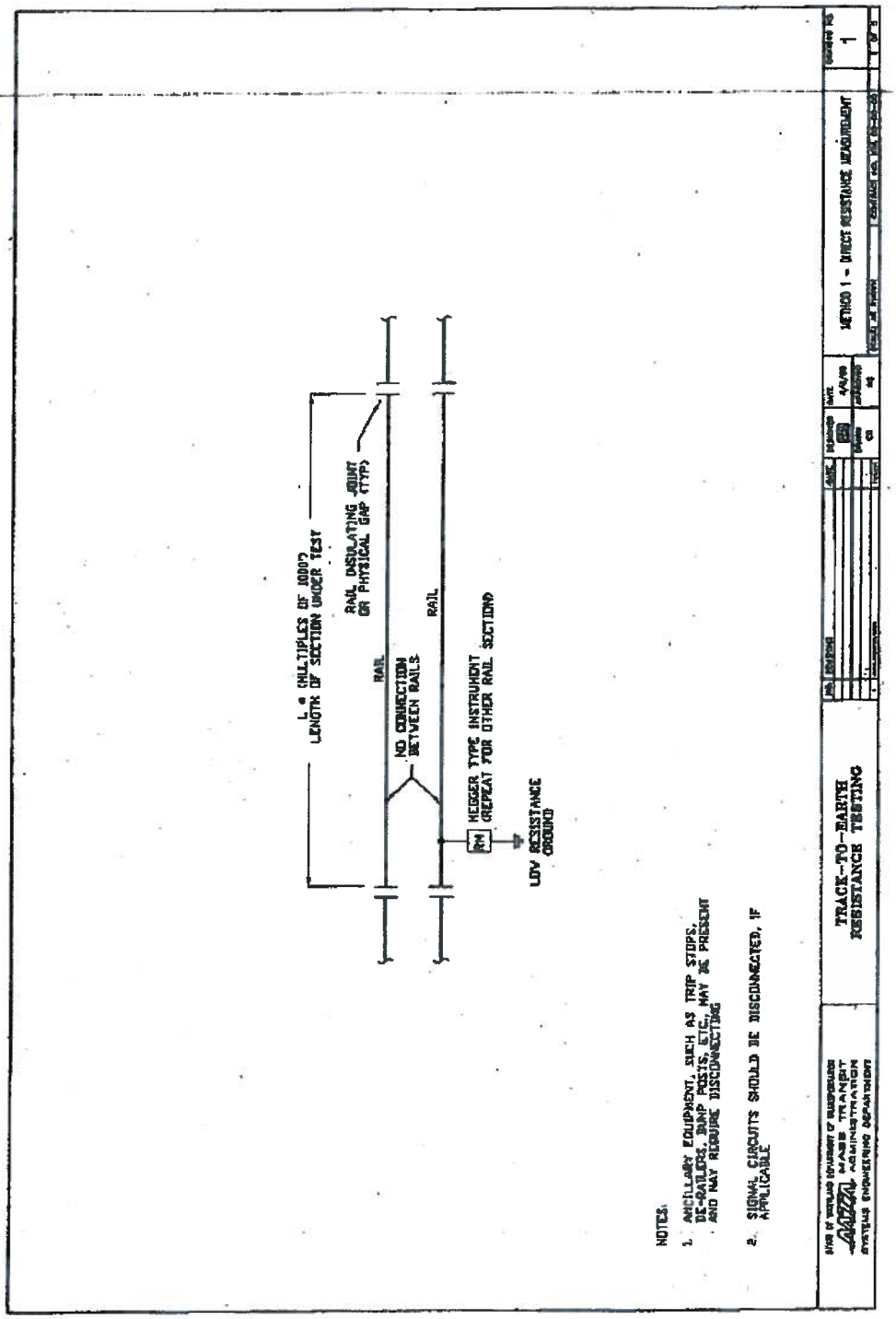
L = (MULTIPLES OF 1000')
LENGTH OF SECTION UNDER TEST
RAIL INSULATING JOINT
OR PHYSICAL GAP (TYP)
RAIL
RAIL
NO CONNECTION
BETWEEN RAILS
M
MEGGER TYPE INSTRUMENT
(REPEAT FOR OTHER RAIL SECTION)
LOW RESISTANCE
GROUND
NOTES:
1. ANCILLARY EQUIPMENT, SUCH AS TRIP STOPS, DE-RAILERS, BUMP POSTS, ETC., MAY BE PRESENT AND MAY REQUIRE DISCONNECTING
2. SIGNAL CIRCUITS SHOULD BE DISCONNECTED, IF APPLICABLE
TRACK-TO-EARTH
RESISTANCE TESTING
METHOD 1 - DIRECT RESISTANCE MEASUREMENT
1

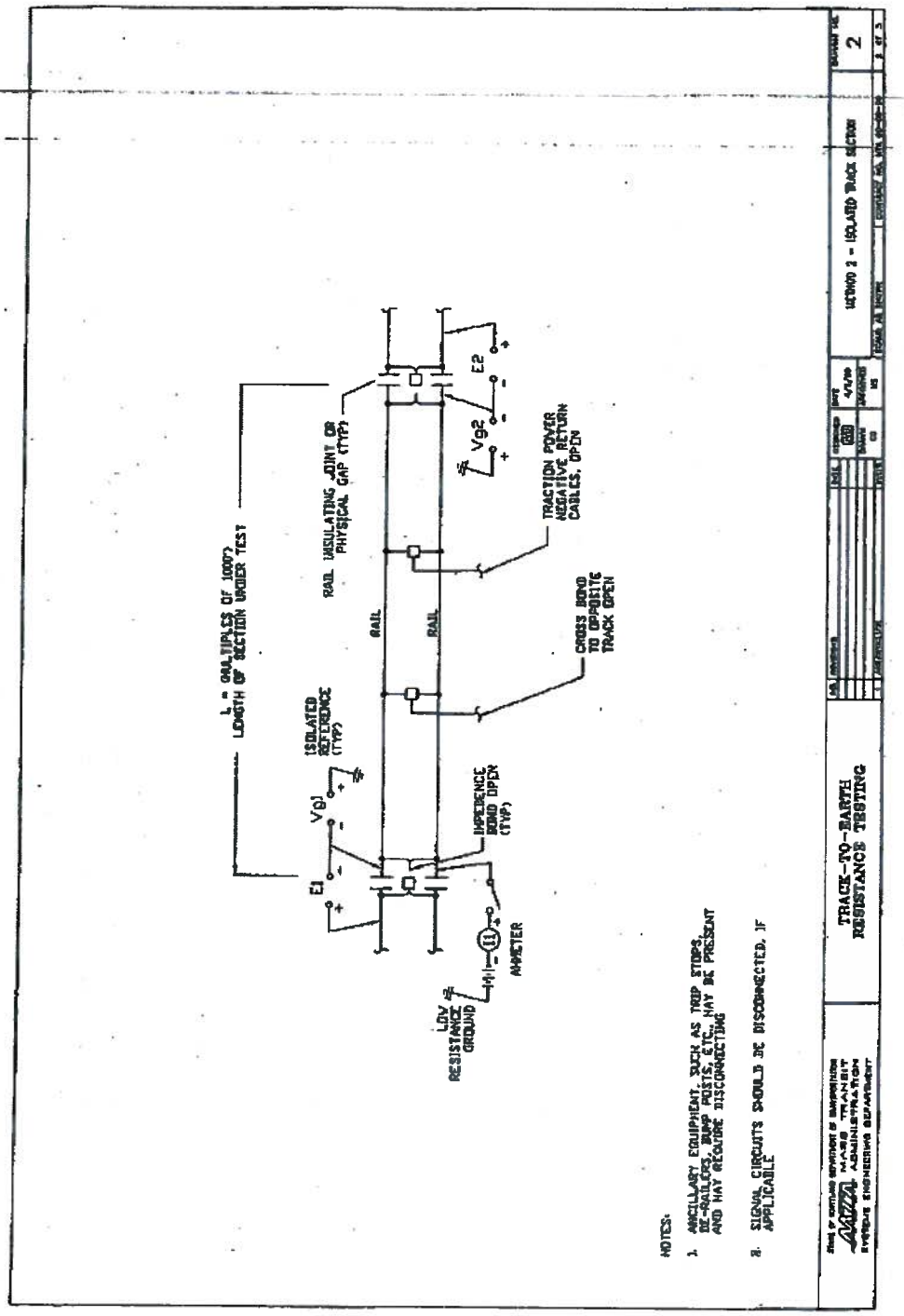
L = GRAL TIPLES OF 1000'
LENGTH OF SECTION UNDER TEST
RAIL INSULATING JOINT OR PHYSICAL GAP (TYP)
E2
Vg2
TRACTION POWER NEGATIVE RETURN CABLES, OPEN
RAIL
RAIL
CROSS BOND TO OPPOSITE TRACK OPEN
ISOLATED REFERENCE (TYP)
Vg1
E1
IMPEDENCE BOND OPEN (TYP)
AMMETER
LOW RESISTANCE GROUND
NOTES:
1. ANCILLARY EQUIPMENT, SUCH AS TRIP STOPS, DE-RAILERS, BUMP POSTS, ETC., MAY BE PRESENT AND MAY REQUIRE DISCONNECTING
2. SIGNAL CIRCUITS SHOULD BE DISCONNECTED, IF APPLICABLE
TRACK-TO-EARTH RESISTANCE TESTING
MASS TRANSIT ADMINISTRATION
SYSTEMS ENGINEERING DEPARTMENT
2

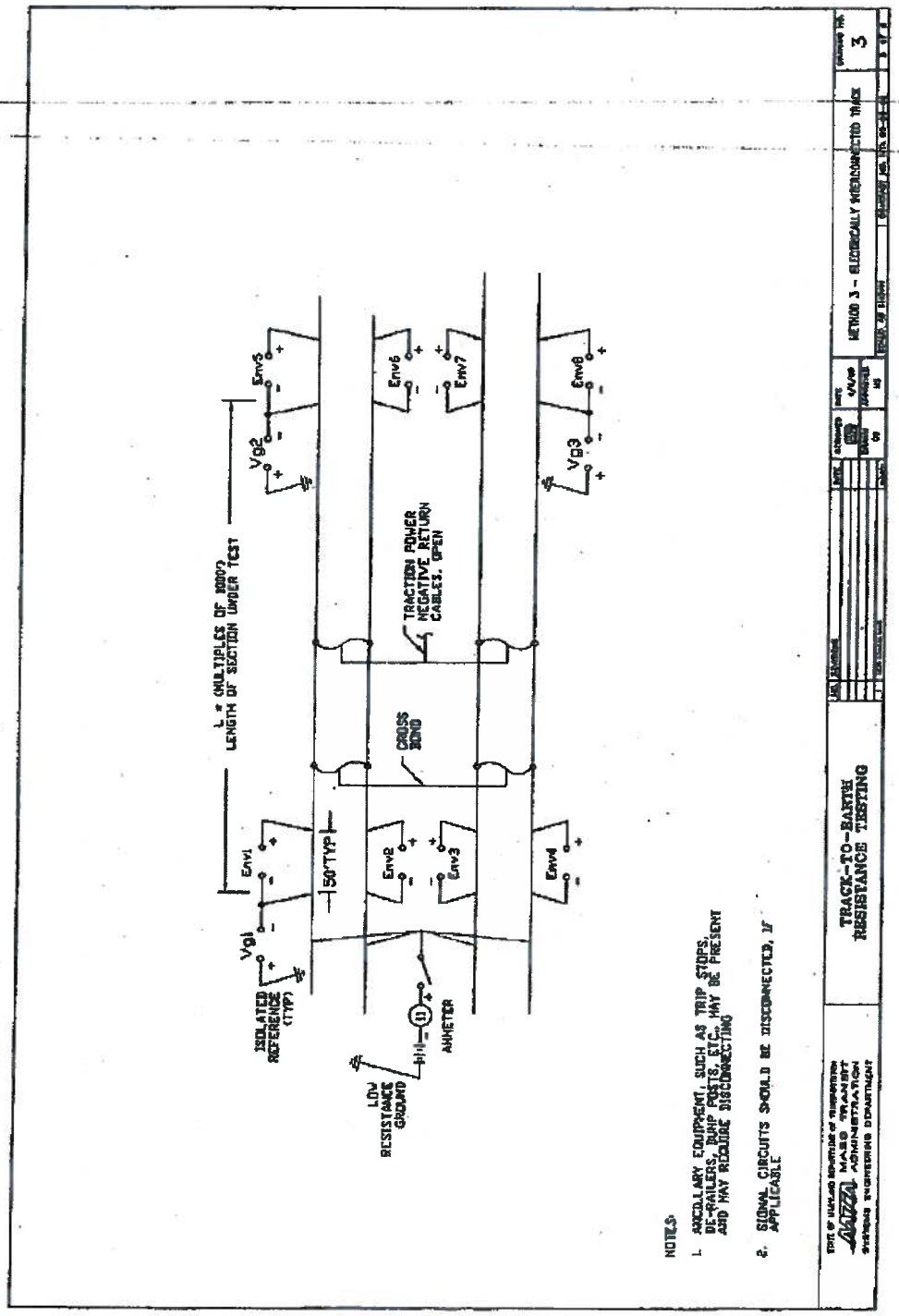
L = (MULTIPLES OF 1000')
LENGTH OF SECTION UNDER TEST
Vg1
Vg2
Vg3
Env1
Env2
Env3
Env4
Env5
Env6
Env7
Env8
50' TYP
ISOLATED REFERENCE (TYP)
LOW RESISTANCE GROUND
AMMETER
CROSS BOND
TRACTION POWER NEGATIVE RETURN CABLES, OPEN
NOTES:
1. AUXILIARY EQUIPMENT, SUCH AS TRIP STOPS, DE-FAILERS, BUMP POSTS, ETC., AND MAY REQUIRE DISCONNECTING
2. SIGNAL CIRCUITS SHOULD BE DISCONNECTED, IF APPLICABLE
TRACK-TO-EARTH RESISTANCE TESTING
METHOD 3 - ELECTRICALLY MISCONNECTED TRACK
3

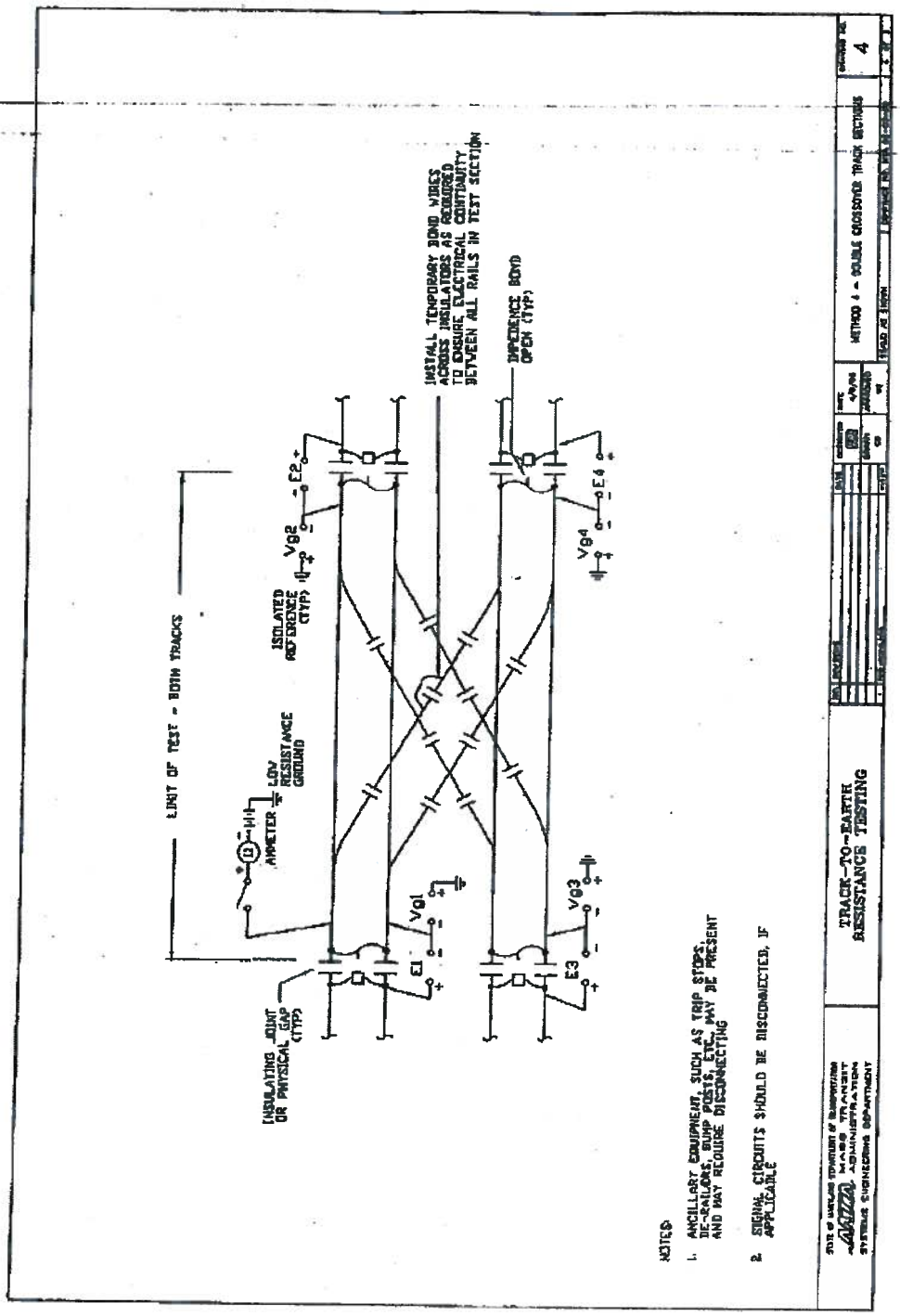
LIMIT OF TEST - BOTH TRACKS
AMMETER
LOW RESISTANCE GROUND
ISOLATED REFERENCE (TYP)
INSULATING JOINT OR PHYSICAL GAP (TYP)
INSTALL TEMPORARY BOND WIRES ACROSS INSULATORS AS REQUIRED TO ENSURE ELECTRICAL CONTINUITY BETWEEN ALL RAILS IN TEST SECTION
IMPEDENCE BOND OPEN (TYP)
Vg1
Vg2
Vg3
Vg4
E1
E2
E3
E4
NOTES
1. ANCILLARY EQUIPMENT SUCH AS TRIP STOPS, DE-RAILERS, BUMP POSTS, ETC., MAY BE PRESENT AND MAY REQUIRE DISCONNECTING
2. SIGNAL CIRCUITS SHOULD BE DISCONNECTED, IF APPLICABLE
TRACK-TO-EARTH RESISTANCE TESTING
METHOD 4 - DOUBLE CROSSOVER TRACK SECTIONS
4

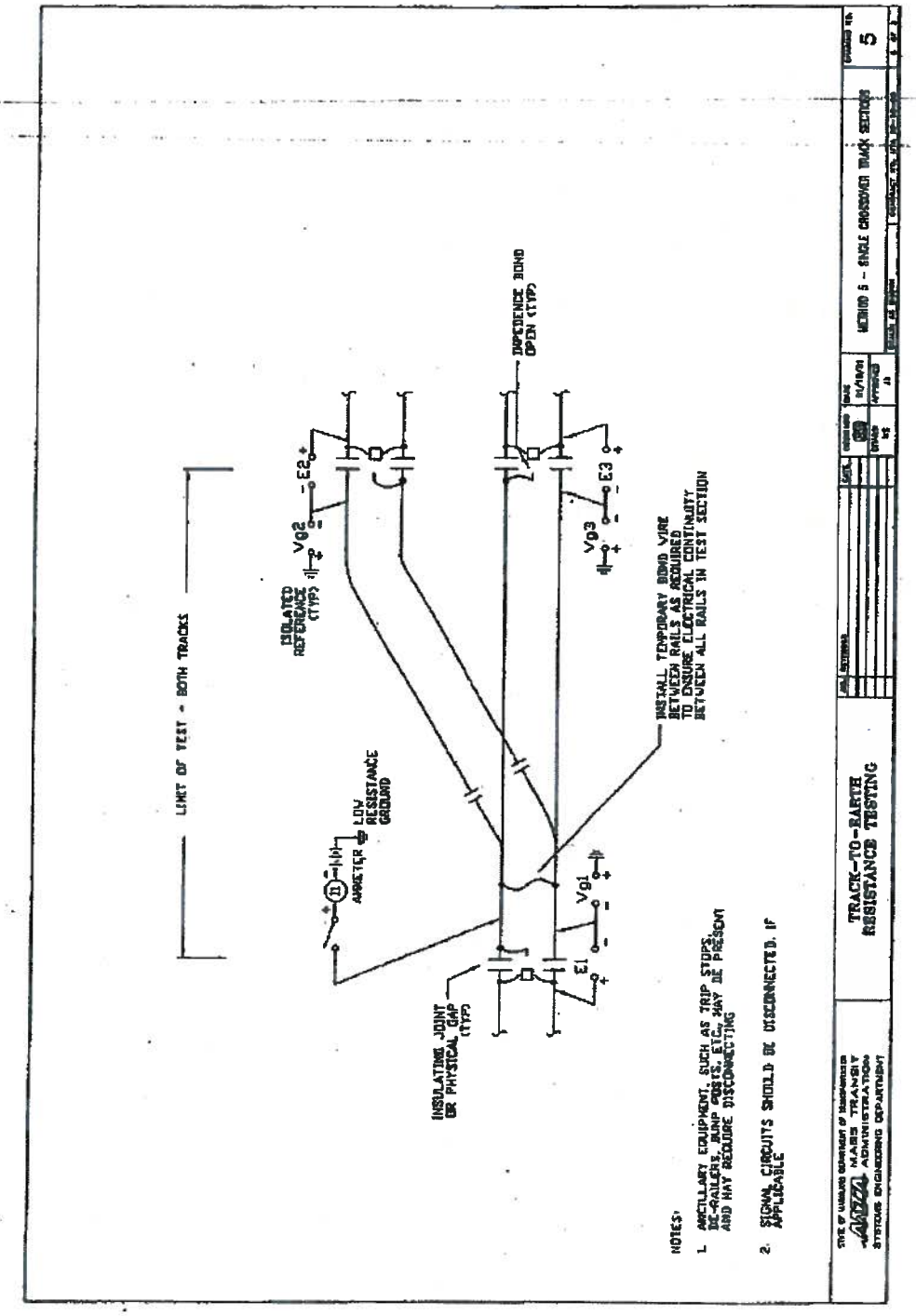

END OF SECTION

APPENDIX C

FEDERAL WAGE RATES

ADDENDUM NO.2

General Decision Number: MD130028 07/12/2013 MD28

Superseded General Decision Number: MD20120052

State: Maryland

Construction Type: Heavy

County: Baltimore City County in Maryland.

HEAVY CONSTRUCTION PROJECTS (including sewer/water construction).

Modification Number	Publication Date
0	01/04/2013
1	01/11/2013
2	06/14/2013
3	06/28/2013
4	07/12/2013

CARP0101-014 07/01/2011

	Rates	Fringes
CARPENTER (Form Work Only).....	$ 24.84	11.00

CARP0101-015 04/01/2011

	Rates	Fringes
MILLWRIGHT.....	$ 27.91	11.25

CARP0101-016 07/01/2011

	Rates	Fringes
PILEDRIVERMAN.....	$ 24.84	11.00

ELEC0024-002 05/02/2012

	Rates	Fringes
ELECTRICIAN.....	$ 34.60	5.25%+13.45

ENGI0037-024 10/01/2009

	Rates	Fringes
OPERATOR: Backhoe.....	$ 23.95	11.05+a
OPERATOR: Bobcat/Skid Steer/Skid Loader.....	$ 23.05	11.05+a
OPERATOR: Bulldozer.....	$ 23.95	11.05+a
OPERATOR: Drill.....	$ 23.95	11.05+a
OPERATOR: Excavator 120,000 lbs. and Under.....	$ 23.95	11.05+a
Long and Ultra High Reach Excavators; Excavators Over 120,000 lbs.....	$ 24.95	11.05+a
Mini-Excavators.....	$ 23.05	11.05+a

ADDENDUM NO.2

OPERATOR: Gradall	$ 24.95	11.05+a
OPERATOR: Grader/Blade	$ 24.95	11.05+a
OPERATOR: Loader Front End Loaders 1 1/4 yards and over	$ 23.95	11.05+a
Front End Loaders 1 Yard and Under	$ 23.05	11.05+a
OPERATOR: Mechanic	$ 23.95	11.05+a
OPERATOR: Paver (Asphalt, Aggregate, and Concrete)	$ 23.05	11.05+a
OPERATOR: Piledriver	$ 24.95	11.05+a
OPERATOR: Roller	$ 23.05	11.05+a

a. PAID HOLIDAYS: New Year's Day, Memorial Day, Independence Day, Labor Day, Thanksgiving Day and Christmas Day.

---

* IRON0016-014 04/01/2013

	Rates	Fringes
IRONWORKER, REINFORCING	$ 26.88	17.55

LABO0710-006 04/01/2010

	Rates	Fringes
LABORER: Common or General	$ 15.45	5.41
LABORER: Landscape	$ 15.45	5.41
LABORER: Mason Tender - Cement/Concrete	$ 16.61	5.41

PAIN0051-021 06/01/2013

	Rates	Fringes
PAINTER (Steel)	$ 32.66	8.91
PAINTER: Brush, Roller, and Spray	$ 24.89	8.91

PLAS0891-006 05/01/2010

	Rates	Fringes
CEMENT MASON/CONCRETE FINISHER	$ 27.15	9.58

PLUM0486-015 06/01/2013

	Rates	Fringes
PLUMBER/PIPEFITTER	$ 36.495	16.79

TEAM0311-006 06/01/2012

	Rates	Fringes
TRUCK DRIVER: Lowboy Truck	$ 27.66	8.00+a+b

a. PAID HOLIDAYS: New Year's Day, Memorial Day, Independence Day, Labor Day, Thanksgiving Day and Christmas Day.

b. VACATION: Employees with 1 year of service - 1 week paid vacation; 2 years service - 2 weeks paid vacation; 10 years service - 3 weeks paid vacation.

c. HEALTH AND WELFARE: $881 per month

SUMD2010-067 07/08/2010

	Rates	Fringes
BRICKLAYER	$ 18.70	0.00
CARPENTER, Excludes Form Work	$ 19.00	2.52
IRONWORKER, STRUCTURAL	$ 23.80	11.63
LABORER: Flagger	$ 15.71	8.58
LABORER: Grade Checker	$ 14.62	3.08
LABORER: Mason Tender - Brick	$ 15.93	7.83
LABORER: Pipelayer	$ 12.85	2.04
OPERATOR: Crane	$ 22.00	8.85
OPERATOR: Trackhoe	$ 20.47	10.20
TRUCK DRIVER: Dump Truck	$ 11.84	0.00

WELDERS - Receive rate prescribed for craft performing operation to which welding is incidental.

==========

Unlisted classifications needed for work not included within the scope of the classifications listed may be added after award only as provided in the labor standards contract clauses (29CFR 5.5 (a) (1) (ii)).

The body of each wage determination lists the classification and wage rates that have been found to be prevailing for the cited type(s) of construction in the area covered by the wage determination. The classifications are listed in alphabetical order of "identifiers" that indicate whether the particular rate is union or non-union.

Union Identifiers

An identifier enclosed in dotted lines beginning with characters other than "SU" denotes that the union

classification and rate have found to be prevailing for that classification. Example: PLUM0198-005 07/01/2011. The first four letters , PLUM, indicate the international union and the four-digit number, 0198, that follows indicates the local union number or district council number where applicable , i.e., Plumbers Local 0198. The next number, 005 in the example, is an internal number used in processing the wage determination. The date, 07/01/2011, following these characters is the effective date of the most current negotiated rate/collective bargaining agreement which would be July 1, 2011 in the above example.

Union prevailing wage rates will be updated to reflect any changes in the collective bargaining agreements governing the rates.

0000/9999: weighted union wage rates will be published annually each January.

Non-Union Identifiers

Classifications listed under an "SU" identifier were derived from survey data by computing average rates and are not union rates; however, the data used in computing these rates may include both union and non-union data. Example: SULA2004-007 5/13/2010. SU indicates the rates are not union majority rates, LA indicates the State of Louisiana; 2004 is the year of the survey; and 007 is an internal number used in producing the wage determination. A 1993 or later date, 5/13/2010, indicates the classifications and rates under that identifier were issued as a General Wage Determination on that date.

Survey wage rates will remain in effect and will not change until a new survey is conducted.

WAGE DETERMINATION APPEALS PROCESS

1.) Has there been an initial decision in the matter? This can be:

* an existing published wage determination
* a survey underlying a wage determination
* a Wage and Hour Division letter setting forth a position on a wage determination matter
* a conformance (additional classification and rate) ruling

On survey related matters, initial contact, including requests for summaries of surveys, should be with the Wage and Hour Regional Office for the area in which the survey was conducted because those Regional Offices have responsibility for the Davis-Bacon survey program. If the response from this initial contact is not satisfactory, then the process described in 2.) and 3.) should be followed.

With regard to any other matter not yet ripe for the formal

process described here, initial contact should be with the Branch of Construction Wage Determinations. Write to:

Branch of Construction Wage Determinations
Wage and Hour Division
U.S. Department of Labor
200 Constitution Avenue, N.W.
Washington, DC 20210

2.) If the answer to the question in 1.) is yes, then an interested party (those affected by the action) can request review and reconsideration from the Wage and Hour Administrator (See 29 CFR Part 1.8 and 29 CFR Part 7). Write to:

Wage and Hour Administrator
U.S. Department of Labor
200 Constitution Avenue, N.W.
Washington, DC 20210

The request should be accompanied by a full statement of the interested party's position and by any information (wage payment data, project description, area practice material, etc.) that the requestor considers relevant to the issue.

3.) If the decision of the Administrator is not favorable, an interested party may appeal directly to the Administrative Review Board (formerly the Wage Appeals Board). Write to:

Administrative Review Board
U.S. Department of Labor
200 Constitution Avenue, N.W.
Washington, DC 20210

4.) All decisions by the Administrative Review Board are final.

==========

END OF GENERAL DECISION

APPENDIX I

TEFLON IMPREGNATED RAIL INSULATOR (TIRI) TECHNICAL REFERENCE

TEFLON IMPREGNATED RAIL INSULATOR

ADDENDUM NO.2

FOX INDUSTRIES
ENGINEERED PRODUCTS

FX-70®
Corrosion Free Teflon® Impregnated Rail Insulator

DESCRIPTION: **FX-70® Fiber Reinforced Teflon® Impregnated Rail Insulator** is fabricated from Fox Industries proprietary flexible resin Teflon® Impregnated self cleaning to prevent debris or other contaminants from sticking to insulator.

The specially shaped **FX-70® Insulator** can be fabricated in various shapes and sizes to fit under rails to prevent electrolysis corroding steel caused by different types of metals coming in contact with the rail, fastener, and steel bolts.

ADVANTAGES:

1. Corrosion Free
2. Teflon® Impregnated
3. Flexible, Crack Free
4. Does Not Crack Under Load. Close-Fitting Shape carries the Load
5. U. V. Resistant
6. Ready to Install
7. When compared to rubber FX-70® Insulator out performs rubber 5 folds.

The Teflon® impregnation, in addition to being self-cleaning, offers U.V. resistance, and permits the pin to be applied more easily by hand or hydraulic means without damage to the **FX-70® Insulator.**

Sample No.	Resistivity (Ohms-cm)	Dielectric Strength (Volts/Mils)
1	4.51 E+15	333
2	5.04 E+15	314
3	4.18 E+15	343

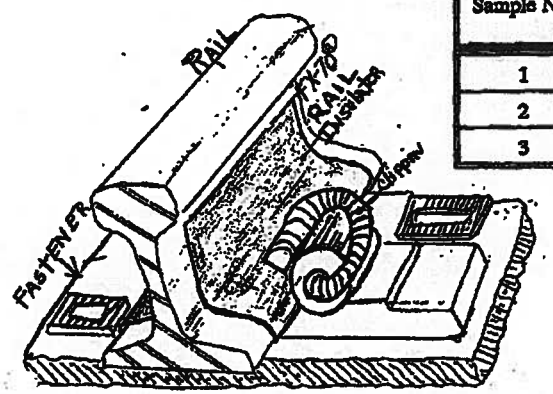

11/95 (OVER)

PHONE 410-243-6655 TOLL FREE 888-760-0309 FAX 410-243-2701

Warranty: We warrant our materials to be of good quality and will replace any material proved defective. We believe that the technical information provided is reliable and that materials will perform to your satisfaction. However, we cannot guarantee final results because of the many possible variations in field conditions and application procedures.

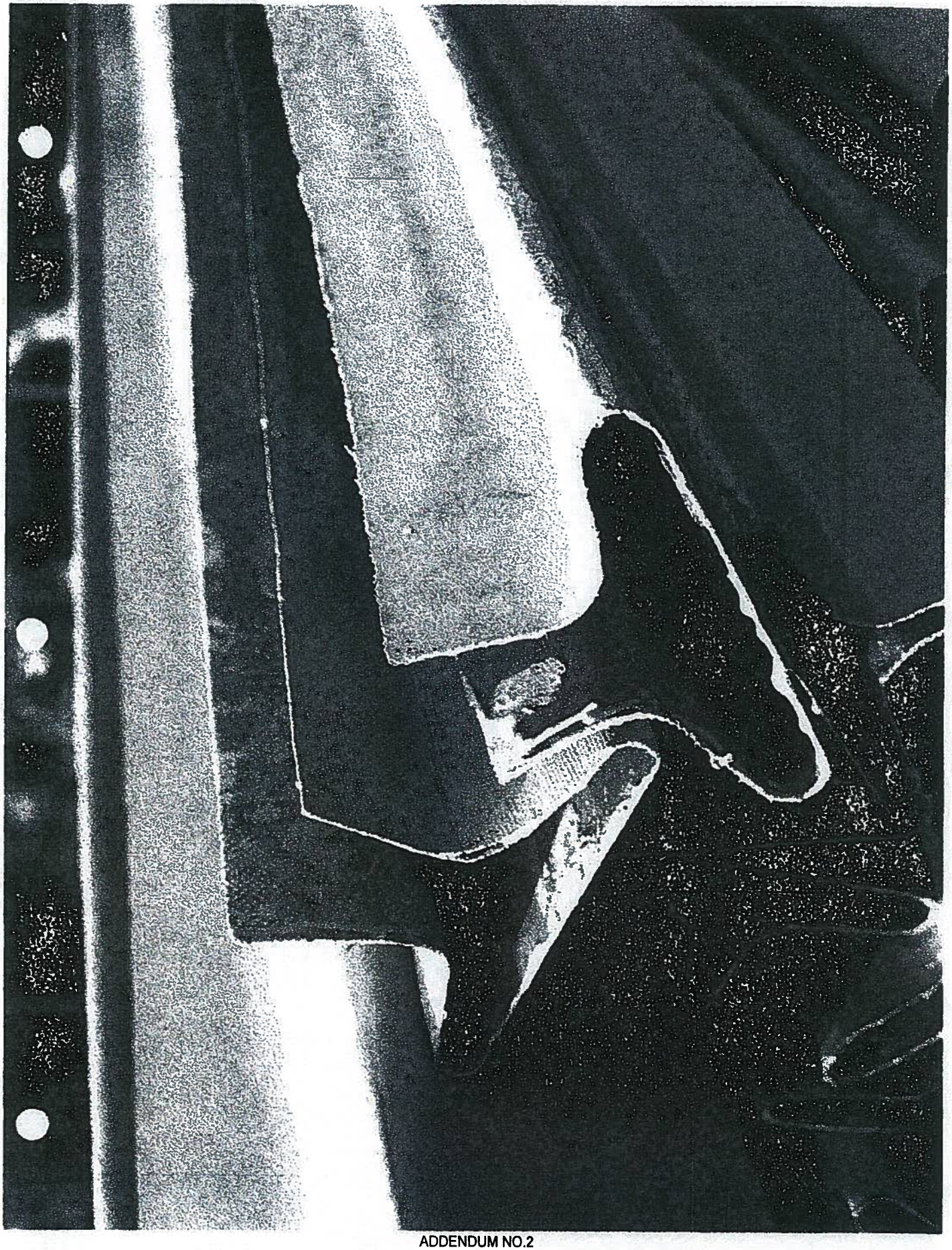

ADDENDUM NO.2

APPENDIX J

LED TRAIN WARNING SIGN SUPPORT DESCRIPTION

Wells Signs, Manufacturing, & Distributing, Inc.

109 Brothers Road, Woodland, WA 98674 Voice:(360) 225-0520 FAX:(360) 225-1921

"TRAIN APPROACHING" PEDESTRIAN WARNING SIGN

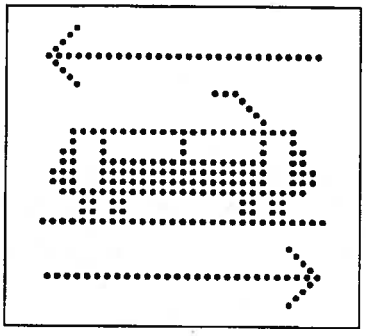

Product Description

The "TRAIN APPROACHING" Pedestrian Warning sign is intended to alert patrons to the fact that a train or trains are nearing the tracks that they are about to cross. When power is applied to the sign, the image of the side of a train will be illuminated with yellow LEDs. At the same time, two red LED arrows, one above and one below the train image, pointed in opposite directions will alternately flash. The flash interval of the arrows can be set to different rates by the installer using a rotary switch on the control board. The train symbol and arrows are created with AlInGaP red and yellow LEDs mounted directly to a matte finish powder coated aluminum face plate. The sign control will have redundant microprocessor controlled supply circuits. The independent circuits will consist of a primary and secondary control, where the primary control and supply runs the sign whenever power is first applied to the sign. The secondary control monitors the primary unit and if the primary unit does not function within 2 seconds, the secondary unit takes over. The primary circuitry, (supply, control, and driver) will be totally disabled if the secondary takes over so that any circuit fault that has occurred will not interfere with the overall sign function. This is a double image sign where each image is displayed on a 16" x 18" black powder coated aluminum plate with a polycarbonate protective lens and housed in a double faced, 8" deep cabinet with 1" visors. Custom configurations are available. Contact the factory for details.

General Specifications

All the "Wells" sign products are manufactured in accordance with the requirements set down in the *Federal Standards Highway Signs Handbook*. These overall requirements include legibility at a minimum distance of 300 feet (91 meters), message blackout regardless of lighting conditions, limited viewing angles based on application requirements, and readability in all specified lighting conditions. The exact viewing distances for any given sign will vary according to sign image size, installation parameters and changing environmental conditions. All images are reproductions of MUTCD symbols and text or customized images specified by the costumer or appropriate governing authority. The

product will operate within specifications over an ambient temperature range of -35°F to +165°F(-37°C to 74°C).

Electronic Specifications

The LED circuitry will consist of two main sub-circuits, the power control system and the LED power bus system. The power control circuitry must be supplied with 12VDC (8-15VDC min-max). Protection components to guard the system against power surges and short circuits are built into the input power circuitry. Isolated inputs provide control for LED functions such as dimming, as required. Output control to the LED bus circuit is current limited and short circuit protected. The bus circuit used in this system employs 12 LED's per strip, with no more that 6 LEDs in series and every other LED is on an alternate circuit.

All the sub-circuits are designed in a modular fashion, allowing the replacement of any bad bus circuit, or supply/control by a qualified technician without the use of a soldering iron. The circuit boards are conformal coated to protect the individual devices and connections against moisture and corrosion.

The LED's that are used for displaying messages or creating traffic control signals are available in several viewing angle and color combinations. The appropriate devices are selected according to the installation and application requirements specified by the customer. Standard viewing angles from the manufactures are 6°, 15°, 23°, and 30°. Luminous intensity in milli-candella (mcd) output varies based on color and viewing angle. The following device specifications reflect one manufacturers data sheets for the components used in this application. Any alternate manufacturers components used will meet or exceed these specifications.

Led Specifications

Color	Dominant Wavelength	Min. Lum. Int. @20ma	Max. Lum. Int. @20ma	Viewing Angle
Yellow	590 nm	4180 mcd	8200 mcd	30°
Red	626 nm	4180 mcd	8200 mcd	30°

By the manufacturers definition, AlInGaP (yellow & red) and InGaN (green) devices have a luminous intensity degradation of approximately 20% over 100,000 hours (11 years) when operated at a non-pulsed 20ma level. The InGaN LEDs that employ phosphor technologies (white) have similar ratings of degradation over 50,000 hours (5.5 years).

Enclosures and Finishes

The final enclosure, slide-in panels, visors, and associated hardware will be fabricated from aluminum or stainless steel as applicable. All openings shall be gasketed or sealed and drain holes will be located in the lower corners of the enclosure to control condensation. The signs will be provided with the specified clamshell mounting system that will be attached to the hinged side of the cabinet. A textured polycarbonate panel will be incorporated into the sign to provide better blanking. The housing doorframe and visor will

Wells Signs, Manufacturing, & Distributing, Inc.
109 Brothers Road, Woodland, WA 98674 Voice:(360) 225-0520 FAX:(360) 225-1921

be natural finish aluminum while the image plate will powder coated matte black. Other finishes and hardware are available per request.

Power Requirements

The power consumption for the red, orange, and yellow/amber AlInGaP LEDs is 4 watts per 100 LEDs while green and white InGaN LEDs consume 8 watts per 100 LEDs. Input power and controls are designed for accept 12VDC and total power will not exceed 35 Watts (2.5 Amps). A terminal strip is provided and is clearly marked by an in-cabinet circuit diagram for easy installation and service.

Warranty

The warranty period begins at the original date of shipment for a period of 3 years and covers defects in materials or workmanship only as detailed in the **WELLS SIGN MFG. & DIST., INC. WARRANTY STATEMENT.**

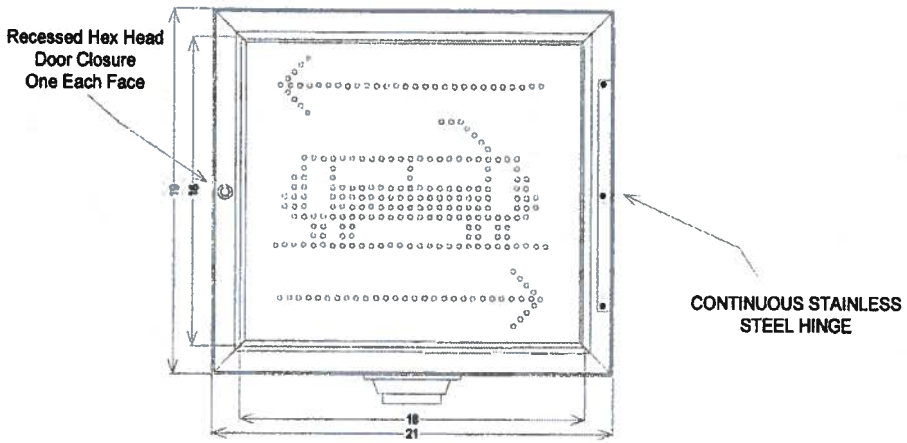

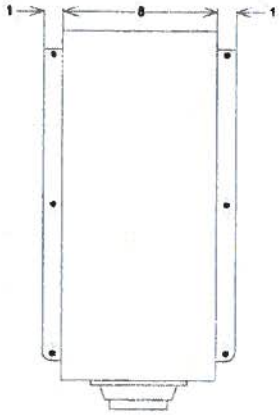

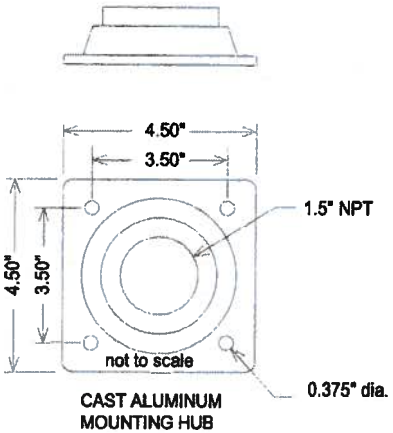

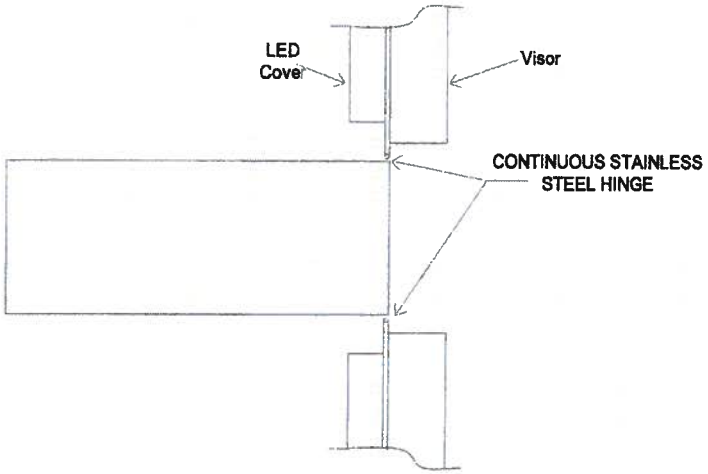

1. The housing, visors, and mounting hardware will have a natural non-painted finish while the faceplates will be powder coated with a non-reflective black finish.
2. All cabinetry, plates, and visors shall be aluminum, while the hinges, recessed bolt closures, and fasteners shall be stainless steel.
3. The sign will use a 1/8-inch non-reflective polycarbonate lens to protect the sign image from the environment.
4. The cabinet and door will be gasketed to prevent water from entering and holes will be drilled in the lower corners of the main extrusion to drain any condensation the may form.
5. Optional mounting hardware specified by the customer may include Pelco brackets, mounting hubs or clamshell mounts as required.

R. KNAPTON	3/3/12
R. WELLS	3/3/12

WELLS SIGN MANUFACTURING AND DISTRIBUTING
103 BROTHERS RD. WOODLAND, WA 98674

ALUMINUM PEDESTRIAN SIGN HOUSING
WITH DOUBLE 18" x 16" FACE
SIGNLE BOTTOM HUB & 1 INCH VISORS

NONE

TRNPED1816-1

ADDENDUM NO.2

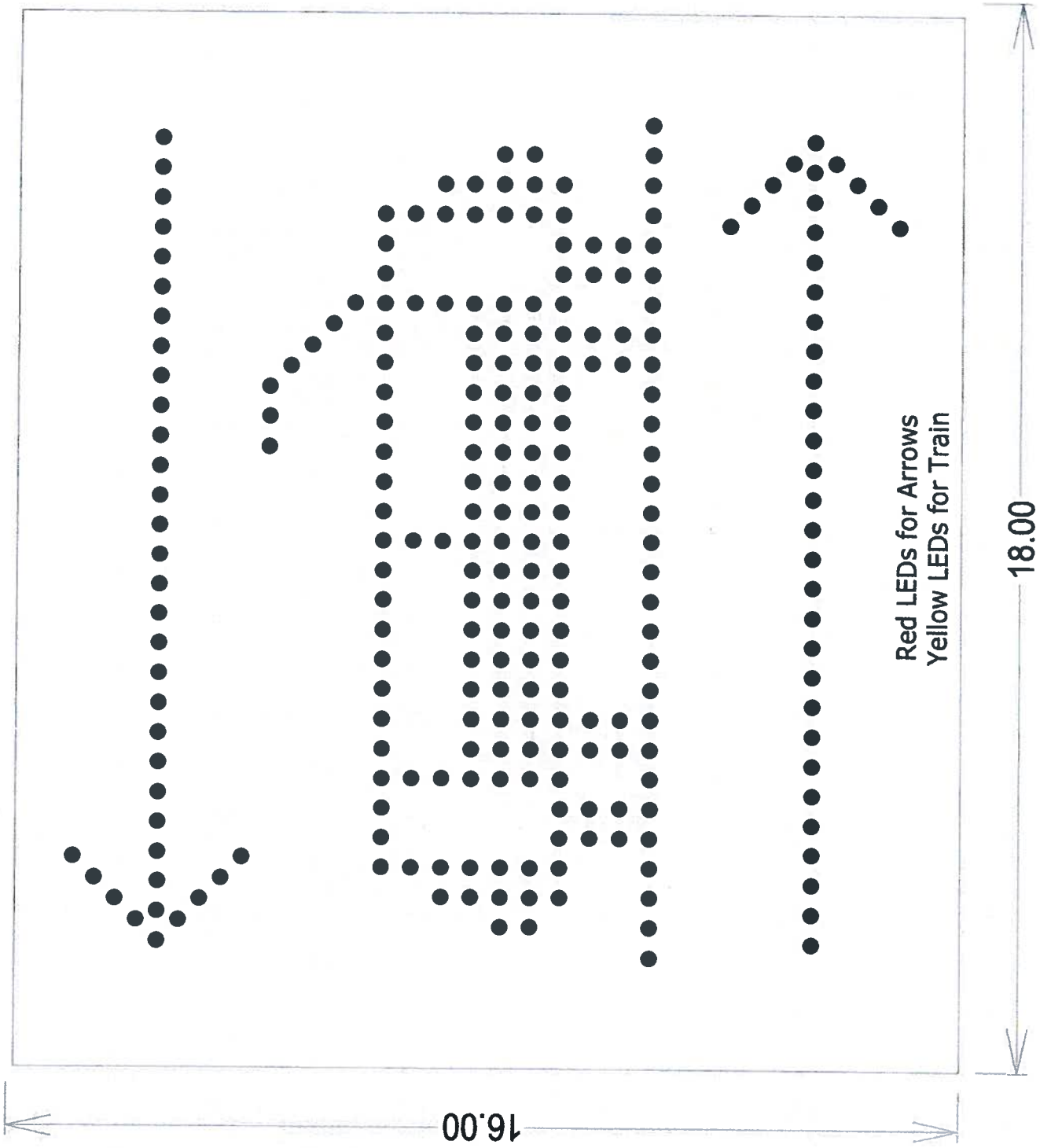

ADDENDUM NO.2

ADDENDUM NO.2

REDUNDANT TRAIN-PED SIGNAL CONTROL

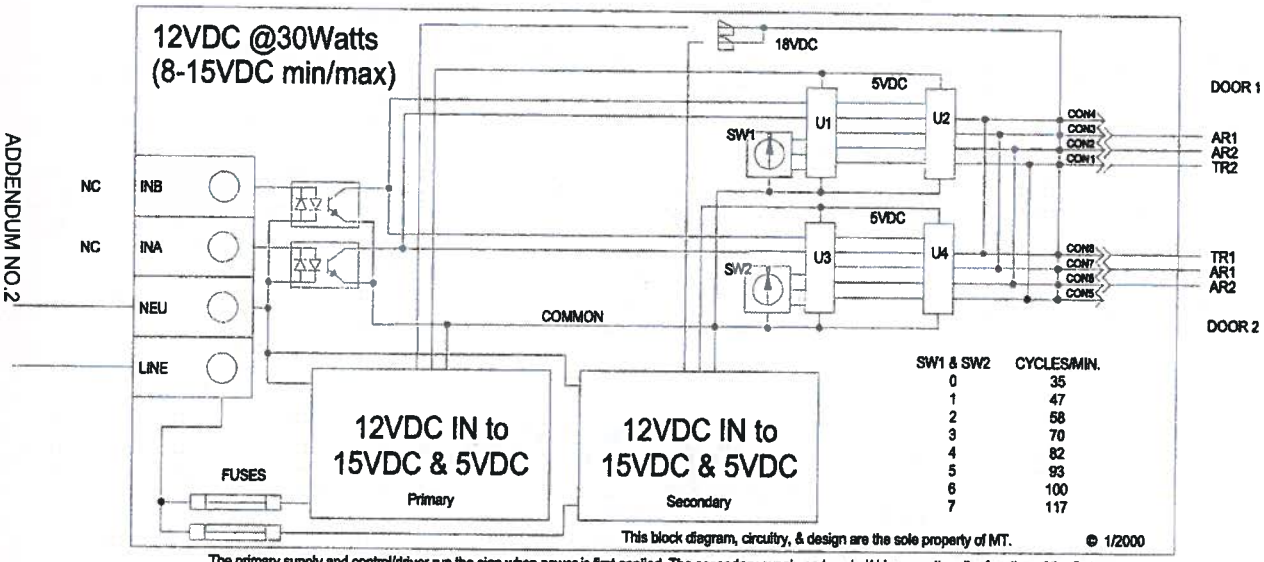

The primary supply and control/driver run the sign when power is first applied. The secondary supply and control/driver monitors the function of the first.
If the first supply and control/driver does not run, the second circuit takes over in approximately 2 seconds.
SW1 sets the flash rate of the primary and SW2 sets the flash rate of the secondary circuit. Both switches should be set the same.

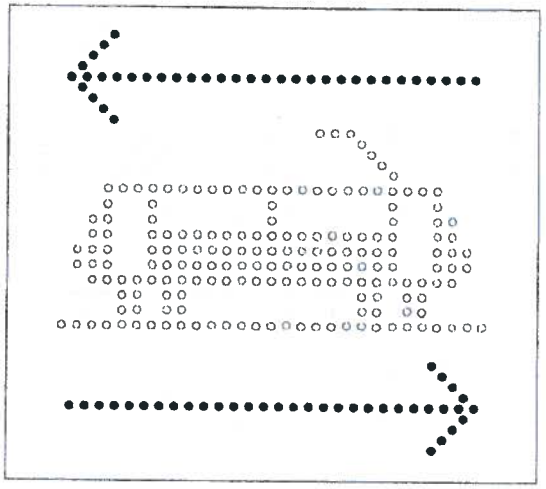

TOP AND BOTTOM ARROW WILL ALTERNATELY FLASH
AT THE RATE SET BY THE ROTARY SWITCHES
LEFT THEN RIGHT AS LONG AS POWER IS APPLIED.

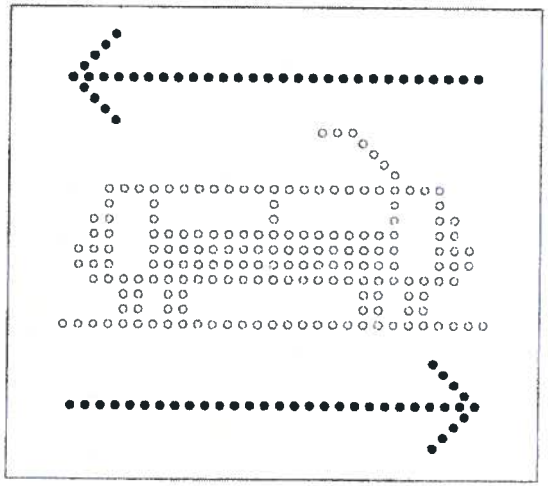

PELCO PRODUCTS, INC.
www.pelcoinc.com
EDMOND, OK 73013
405-340-3434
FAX: 405-340-3435

This drawing is for reference only. It is the property of Pelco and is not to be used in whole or in part without Pelco's permission.

ASSEMBLY SHEET

REF:

TITLE: Base Assy, Square, w/ Alum Door, Alum

PART NO.: PB-5334

Part No.
PB-5334-NL-1S-GL-PXX

Door, No Logo
Collar Screws
Grounding Lug
Paint

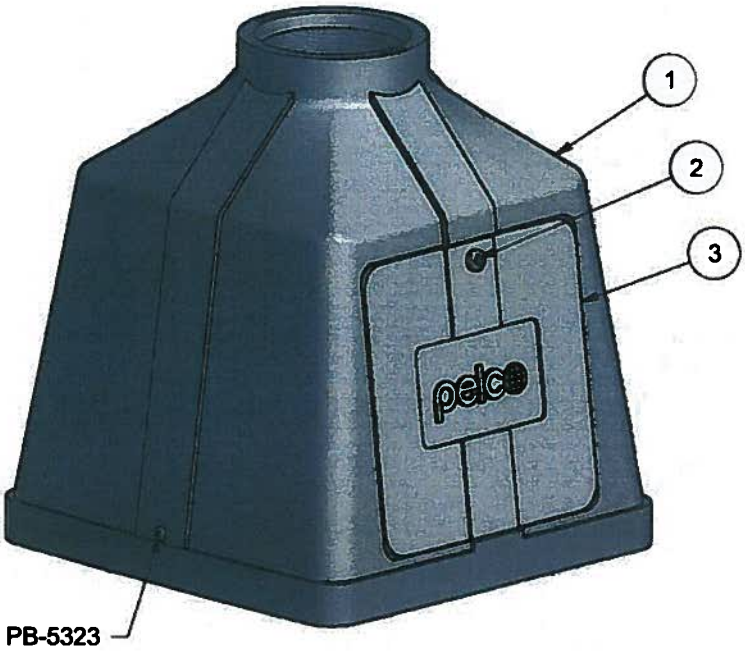

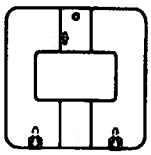

PB-0542-00-M1
Alum Door w/o Logo

(3) FS-3257-SS
Setscrew, Soc Hd
3/8"-16 x 3/4"

(1) FS-2035-SS
Tap Bolt, Hex Hd
3/8"-16 x 1"

Screws in Collar

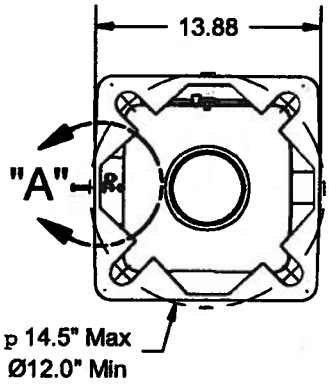

Base Bolt Circle

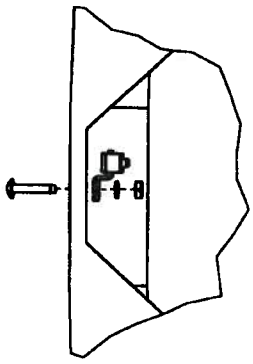

Bottom View
PB-5323
Grounding Lug

Options
NL=No Logo on Alum Door
Screws in Collar 1S=(1) 3/8" Hex Hd Bolt 3S=(3) 3/8" Soc Hd Setscrews
GL=Grounding Lug
Paint

ITEM	PART NUMBER	DESCRIPTION	QTY
1	PB-0545	Base, Square w/o door, Alum	1
2	FS-2039-SS	Capscrew, Soc Button Hd, 5/16"-18 x 1" , Type 304 Stainless	1
3	PB-0542	Door, Square Base, w/ Pelco Logo, 319 Alum	1

DRAWN: L ACORD DATE: 9/16/1991 | CHKD: KAK DATE: 1/22/2010 | REV: C-04/08/10 CM | REV CHKD: KAK DATE: 4/9/2010 | SHEET 1 OF 2

ADDENDUM NO.2

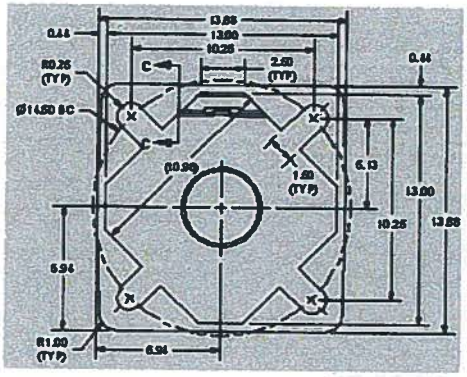
13.88
13.00
10.25
0.44
R0.25
(TYP)
2.50
(TYP)
C
Ø14.50 BC
(10.50)
1.50
(TYP)
6.13
13.00
10.25
13.88
6.94
R1.00
(TYP)
6.94

SPECIFICATION - SQUARE ALUMINUM TRAFFIC SIGNAL BASE

PHYSICAL REQUIREMENTS:

Square cast aluminum with natural finish, minimum weight of 21 lbs. with dimensions as shown in figure 1.

Upper end shall be threaded to receive a 4" NPT pipe shaft. Base threads shall be tapped to allow full pole engagement w/o exposed threads on the pole.

Shall be of such design that it may be fastened to a foundation with four (4) 3/4" anchor bolts located 90 degrees apart on the bottom of the base. There shall be slots in the bottom of the base 1½" wide and 2½" long measured along the circumference of the bolt circle, allowing a proper fit even if the bolts are placed slightly off center.

Shall accommodate bolt circles of a minimum of 12" through a maximum of 14½" and anchor bolts with a minimum of 5/8" through 1" diameter.

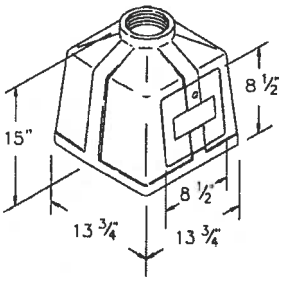

Figure 1

Shall be equipped with a removable plastic door. Door opening shall be free of burrs and sharp edges and be no less than 8½" square. The door shall be attached to the Base using one stainless steel socket button head screw to prevent unauthorized entry.

Shall be fabricated free of voids, pits, dents, molding sand and excessive foundry grinding marks. All design radii shall be smooth and intact. Exterior surface finish shall be smooth and cosmetically acceptable by being free of molding fins, cracks and other exterior blemishes.

Shall be fabricated from new aluminum ingot. No scrap materials shall be used. Minimum requirements as follows:

Aluminum Alloy	319	Elongation (% in 2")	2
Tensile Strength, KSI	27	Brinell Hardness	70-100
Yield Strength,KSI	18		

STRUCTURAL REQUIREMENTS:

FRANGIBILITY: The base shall meet or exceed 1985 AASHTO breakaway requirements. Test reports from an FHWA approved independent laboratory shall be provided certifying that the base has been tested and meets all applicable requirements. In addition, a statement of certification from the FHWA stating such tests have been accepted and approved shall be supplied.

STRUCTURAL INTEGRITY: In order to prove structural soundness a certification from a recognized independent structural laboratory shall be provided certifying that the base will withstand a bending moment of 10,750 ft. lbs. Such test shall be performed in the following manner:

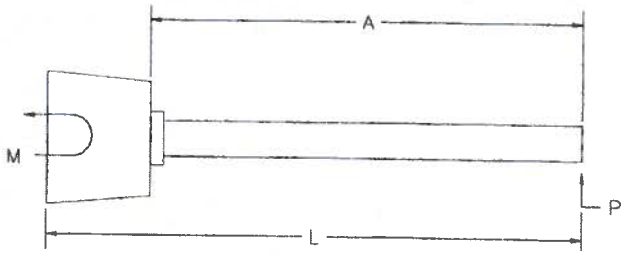

Figure 2

A force (P)(Fig. 2) shall be applied at a distance (L) from the bottom of the base in order to produce a moment (M). All bases must reach a moment capacity of 10,750 ft. lbs. without breaking, cracking or rupturing in any manner.

After force (P) has been removed, the lever arm (A) shall return to within .250" of its original rest position.

All tests shall be made using 4" Schedule 40 Steel Pipe.

DOOR REQUIREMENTS:

Door shall be injection molded from ABS plastic to deter vandalism and theft and having the following properties:

	ASTM Method	VALUE
Tensile @ yield (1/8")	D638	6600 PSI
Flexural @ yield	D790	11,000 PSI
Rockwell Hardness	D785	101 (R Scale)
Notched Izod	D256	5 ft. lb./in.

Figure 3

The door shall exhibit the following properties:

Have an edge thickness of ¼" and a minimum thickness of 5/32".
Contain flame retardant, meeting or exceeding Underwriters Laboratories UL 94 Test H.B.
Color shall be gray aluminum tone unless otherwise specified.
Contain ultra-violet inhibitors and stabilizers for protection against U.V. degradation.
Shall be injection molded with a smooth front finish.
All surfaces shall be flat and straight without blisters, buckling or warping.
Shall have reinforcing ribs. The bottom of the door shall have 2 injection molded lugs with slots of the proper width and depth to fit the base door opening. (Fig. 3)

HARDWARE:

When specified, the base shall be supplied with a set of 4 Anchor Bolts, 3/4" Dia. by 18" length, material per ASTM A-572, galvanized per ASTM A-153. Each Bolt shall have (1) Hex. Nut and (1) Flatwasher.

PELCO PRODUCTS, INC.
www.pelcoinc.com
EDMOND, OK 73013
405-340-3434
FAX: 405-340-3435

This drawing is for reference only. It is the property of Pelco and is not to be used in whole or in part without Pelco's permission.

ASSEMBLY SHEET

REF:

TITLE: Anchor Bolt Kit, 3/4"-10, Set of 4, Galvanized

PART NO.: PB-5306

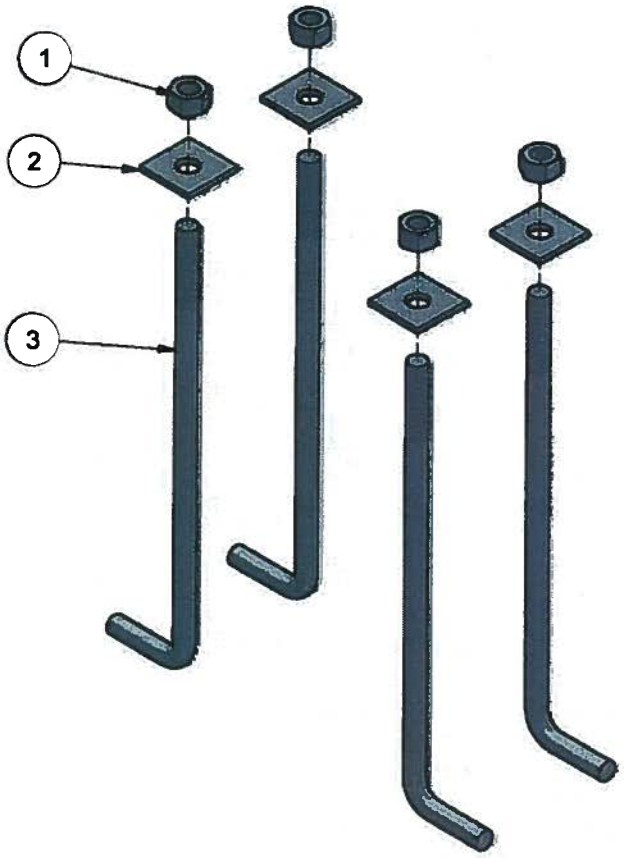

ITEM	PART NUMBER	DESCRIPTION	QTY
1	FS-1010-GLV	Nut, Hex Heavy, 3/4"-10, Waxed w/o Blue Dye, DH Galv	4
2	FS-4911-GLV	Washer, Square, 2-1/4" x 2-1/4" x 3/16" , Galv	4
3	FS-2601-GLV	Bolt, Anchor, 3/4"-10NC x 18" x 3" x 3-1/4" Thread, Hot Dip Galv	4

DRAWN: L ACORD DATE: 3/18/1992 | CHKD: DATE: 2/15/2010 | REV: E-2/10/10 TH | REV CHKD: KAK DATE: 2/15/2010 | SHEET 1 OF 1

ADDENDUM NO.2

SPECIFICATION
ANCHOR BOLTS, ¾"-10 NC. SET OF FOUR (4)

MATERIAL: Anchor Bolts: The rod material for the anchor bolts shall conform to ASTM A-529 Grade 50 specifications, with a minimum yield strength of 50 KSI and minimum tensile strength of 70 KSI. Material shall be of domestic origin (manufactured in the USA).

Nuts: The nut material for the hex nuts shall conform to ASTM A-563 Grade DH specifications.

Washers: The washer material for the washers shall conform to ASTM F-844 specifications.

Certifications shall be available upon request.

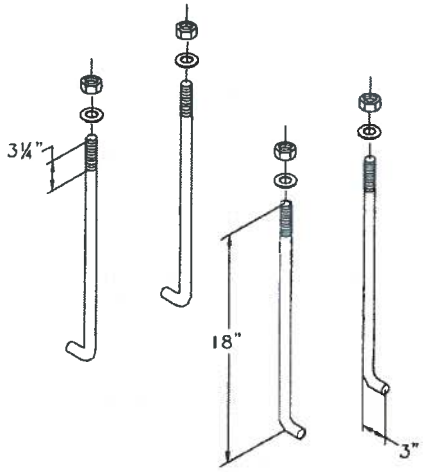

Figure 1

DESIGN:

1. The anchor bolts and hardware shall be fabricated with the dimensions and design characteristics as shown in Figure 1.
2. The anchor bolts shall be threaded ¾"-10 NC for a minimum length of 3-1/4 inches of thread. The anchor bolts shall have an "L" bend of at least 3 inches as measured from inside the anchor bolt shaft to the end of the bend. The bend shall have a 1/2 inch minimum radius. The length of the anchor bolt is to be at least 18 inches long as measured from inside of the bend to the threaded end of the anchor bolt.
3. Nuts shall be tapped oversize for proper thread engagement on the hot dip galvanized anchor bolt threads.

FINISH: Anchor bolts and related hardware shall be hot dip galvanized per ASTM A-153 specifications. Anchor bolts shall be galvanized their full length. All galvanize runs, drips, icicles, and bare spots shall be properly treated. The Anchor Bolt threads shall be brushed or re-threaded after galvanizing to remove any excess galvanize in the threads. Nuts shall be re-tapped after galvanizing.

DELIVERY: Upon request, successful bidder shall deliver a completed assembly within 10 working days after bid opening date.

PELCO PRODUCTS, INC.
www.pelcoinc.com
EDMOND, OK 73013
405-340-3434
FAX: 405-340-3435

This drawing is for reference only. It is the property of Pelco and is not to be used in whole or in part without Pelco's permission.

ASSEMBLY SHEET

REF:

TITLE: Pole, 4"-8 NPT TOE Sch 40, Spun Alum

PART NO.: PB-5100

PART NO
PB-5100-L-PXX

Length

Process No Color=PNC
Paint=PXX

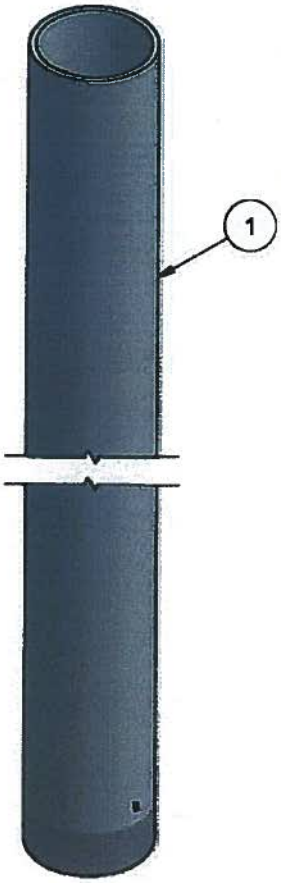

OPTIONS
Length
Paint

ITEM	PART NUMBER	DESCRIPTION	QTY
1	PB-5100-L	Pole, 4"-8 NPT TOE Sch 40, Spun w/ Pelican, Alum	1

DRAWN: Christina.Madden DATE: 11/23/2009 | CHK'D: KAK DATE: 11/25/2009 | REV: A-12/16/09 CM | REV CHK'D: KBM DATE: 12/17/2009 | SHEET 1 OF 1

ADDENDUM NO.2

SPECIFICATIONS
ALUMINUM PEDESTAL POLE

MATERIAL & DESIGN:

Aluminum Pedestal Pole shall be extruded with the following minimum requirements:

Aluminum Alloy..... 6061-T6
Tensile Strength, KSI 38
Yield Strength, KSI..... 35
Elongation (% in 2")..... 8
Standard Wall Thickness ...237"
Outside Diameter ..... 4.5"

Threading and deburring of the Pedestal Pole shall be in accordance with the basic dimensions of American National Standard Taper Pipe Threads, NPT (ANSI B2.1). (Figure 1).

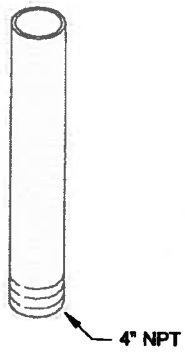

Figure 1

FINISH:

Aluminum poles shall have the following minimum finish requirements:

FINISH TYPE: A rough surface texture consisting of a uniform grain pattern that is perpendicular to the axis of the pole for the full length of pole. (Not a mill finish).

TEXTURE PROFILE: The grain profile shall have a surface roughness (total profile height from peak to valley) of at least two (2), but not more than four (4) times the Roughness Average (Ra) which shall be 250 microinches.

Aluminum Pedestal Poles shall be free of the following finish defects:

1. Excessive material.
2. Heat discoloration of material.
3. Irregular grain spacing, grain patterns, waviness, scratches or marks of varying depths and sizes.
4. Holes, ridges, cracks or other surface defects that are not removed in the finish process.

MILL CERTIFICATION:

Reports to be maintained and supplied on request.

PACKAGING:

Threaded end shall have protective cap to prevent thread damage. Cardboard sleeve shall cover the entire length of shaft to protect surface finish during storage and shipment.

PELCO PRODUCTS, INC.
www.pelcoinc.com
EDMOND, OK 73013
405-340-3434
FAX: 405-340-3435

This drawing is for reference only. It is the property of Pelco and is not to be used in whole or in part without Pelco's permission.

ASSEMBLY SHEET

REF:

TITLE: Slip Fitter, 1-Way, Alum

PART NO.: SE-3106

PART NO
SE-3106-PXX

Process No Color=PNC
Paint=PXX

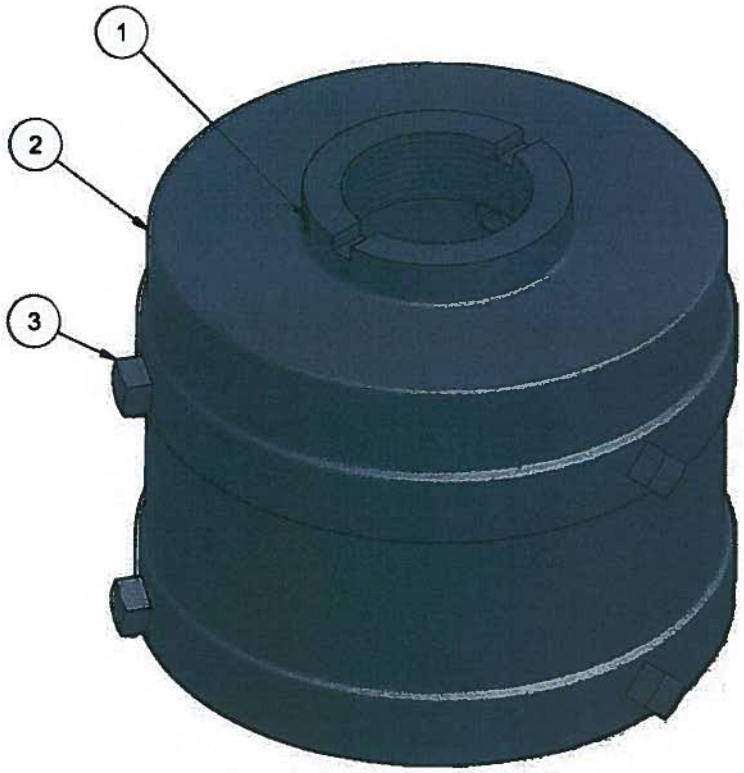

OPTIONS
Paint

ITEM	PART NUMBER	DESCRIPTION	QTY
1	FS-3217-SS	Set Screw, Soc Hd, 1/4"-20 x 3/8", Type 304 Stainless	1
2	SE-3106-M1	Slip Fitter, 1-Way, Alum	1
3	FS-3204-SS	Set Screw, Square Hd, Cup Point, 3/8"-16 x 3/4", Type 304 Stainless	6

DRAWN: L ACORD DATE: 5/4/1992 | CHK'D: RW DATE: 10/15/2007 | REV: F-10/26/10 CJ | REV CHK'D: KAK DATE: 10/27/2010 | SHEET 1 OF 1

ADDENDUM NO.2

SPECIFICATION
SLIPFITTER FOR ONE-WAY SIGNAL

MATERIAL: The One-Way Slipfitter shall be cast from aluminum alloy 319 or equivalent, free of voids, pits, dents, molding sand and excessive foundry grinding marks. All design radii shall be smooth and intact. Exterior and interior surface finish shall be smooth and cosmetically acceptable, free of molding fins, cracks and other exterior blemishes. Certification shall be available upon request.

Shall be fabricated from aluminum ingot with minimum requirements as follows:

Aluminum Alloy	319
Yield Strength, KSI	18
Tensile Strength, KSI	27
Brinell Hardness	70
Elongation (% in 2")	2

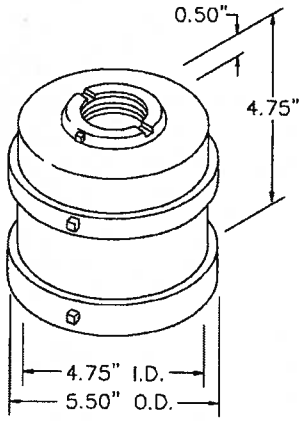

Figure 1

DESIGN:

1. The One-Way Slipfitter shall be fabricated with dimensions and design characteristics as shown in Figure 1.
2. The Slipfitter shall weigh a minimum of two (2) pounds.
3. The Slipfitter shall have an inside opening of 4-3/4" and a minimum of 3-3/4" depth to allow for a slip fit onto an aluminum or galvanized steel pole.
4. The Slipfitter shall tighten onto the pole by means of six (6) 3/8"-16 x 3/4" Square Head Setscrews. The Setscrews shall be located in two horizontal reinforcing rings and installed on 120° centers.
5. The Slipfitter shall have a 1½"-11½ NPS threaded boss extending ½" above the center of the top surface.
6. The threaded boss shall be drilled, tapped, and provided with a ¼"-20 x 3/8" Socket Head Setscrew.
7. The boss shall have a 3/16" x ¼" notch for a Serrated Lockring.

HARDWARE: All hardware shall be plated zinc with yellow dichromate or stainless steel.

FINISH: The Slipfitter shall have an alodine conversion coating to provide a proper base for paint adhesion. The assembly shall be painted federal yellow or other color as specified and baked in a drying oven after painting.

DELIVERY: Upon request, successful bidder shall deliver a completed assembly within 10 working days after bid opening date.

PELCO PRODUCTS, INC.
www.pelcoinc.com
EDMOND, OK 73013
405-340-3434
FAX: 405-340-3435

This drawing is for reference only. It is the property of Pelco and is not to be used in whole or in part without Pelco's permission.

ASSEMBLY SHEET

REF:	TITLE:	PART NO.:
	Nipple, 1-1/2" NPS x Length, Alum	SE-0436

PART NO.
SE-0436-L-PNC

Length in Inches
Process No Color=PNC
Paint=PXX

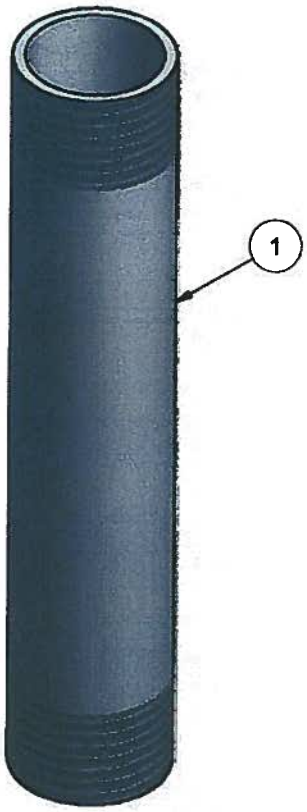

OPTIONS
Length
Paint

ITEM	PART NUMBER	DESCRIPTION	QTY
1	SE-0436-L	Nipple, 1-1/2" NPS x Length, Alum	1

DRAWN: L ACORD DATE: 9/21/1989 | CHK'D: KAK DATE: 1/12/2006 | REV: E-3/4/11 TAS | REV CHK'D: KAK DATE: 3/4/2011 | SHEET 1 OF 1

REV	DESCRIPTION	APPROVED
K-02/14/11 CJ	CHG'D 1-1/2" THREAD NOTE	KBM & KSS
L-06/29/11 CJ	ADDED TO NOTE	KBM
M-01/26/12 JN	ADDED ANODIZE TO FINISH NOTE	KAK

MAT'L: PIPE, 1-1/2" SCH 40 X 12'-0" LG, 6063-T6 ALUM (SE-0436)
FINISH: ALUM PROCESS, PAINT AS REQ'D OR ANODIZE
FILLET/ROUNDS: 0.06 UNLESS NOTED

ADDENDUM NO.2

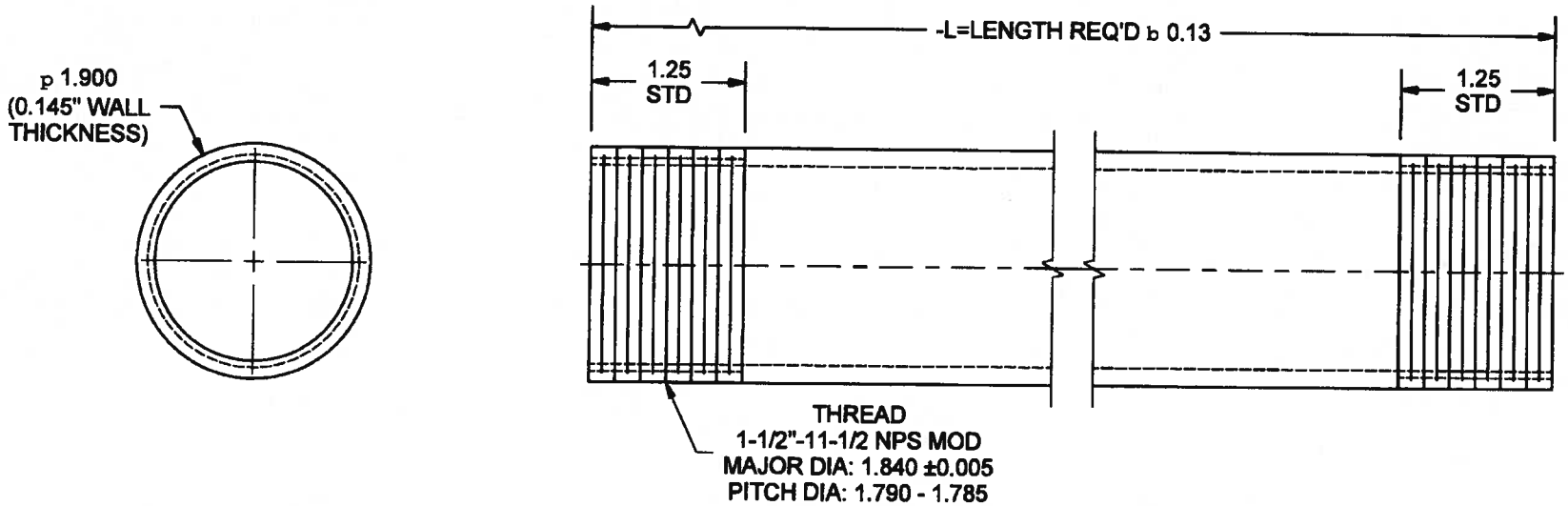

Note: For 3" Nipples & Smaller use P/N: SE-0309-L

MACHINED

pelco PELCO PRODUCTS, INC.
www.pelcoinc.com
EDMOND, OK 73013
PH: 405-340-3434
FAX: 405-340-3435

This drawing is the property of Pelco and is not to be used in whole or in part without Pelco's permission.

TOLERANCE UNLESS OTHERWISE NOTED
.XX = b .060
.XXX = b .030
ANGLES = b 1/2°

TITLE: Nipple, 1-1/2" NPS x Length, Alum

G HUDSON DRAWN:	10/29/2001 DATE:	KAK CHECKED:	1/12/2009 DATE:	M-01/26/12 JN REV.	KAK REV CHK'D:	2/1/2012 DATE:	NTS SCALE:	PELCO NO.:	SE-0436-L

SHEET 1 OF 1

PELCO PRODUCTS, INC.
www.pelcoinc.com
EDMOND, OK 73013
405-340-3434
FAX: 405-340-3435

This drawing is for reference only. It is the property of Pelco and is not to be used in whole or in part without Pelco's permission.

ASSEMBLY SHEET

REF:	TITLE:	PART NO.:
	Check Nut, 1-1/2" NPS, Alum	SE-0448

PART NO.
SE-0448-PNC
SE-0448-DS-PNC
SE-0448-NS-PNC

Setscrew
Process No Color=PNC
Paint=PXX

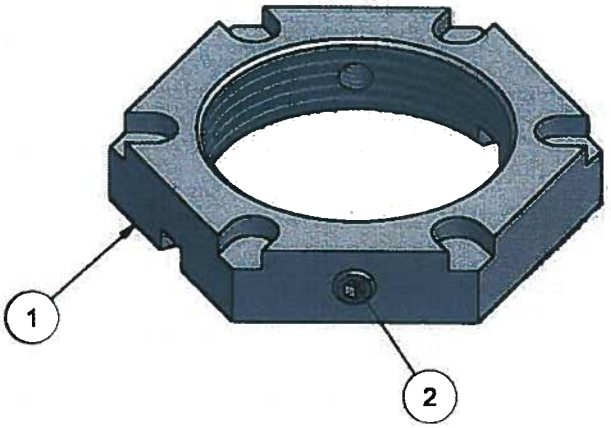

OPTIONS
NS=No Setscrews
DS=Double Setscrews

ITEM	PART NUMBER	DESCRIPTION	QTY
1	SE-0448	Check Nut, 1-1/2" NPS, 380 Die Cast Alum	1
2	FS-3217-SS	Set Screw, Soc Hd, 1/4"-20 x 3/8" , Type 304 Stainless	1

DRAWN: L ACORD DATE: 9/21/1989	CHKD: KAK DATE: 2/4/2009	REV: G-03/05/10 CM	REV CHKD: KAK DATE: 3/9/2010	SHEET 1 OF 1

ADDENDUM NO.2

APPENDIX K
TEST PIT DATA

Corporate Headquarters
24 Hagerty Blvd., Suite 11
West Chester, PA 19382

SoftDig
Subsurface Utility Engineers

Phone No.: (877) SOFTDIG (763-8344)
Fax No.: (610) 696-7864

Vacuum excavation Data Sheet
☒ ENGLISH UNITS ☐ METRIC UNITS

SoftDig® Project #: 120622 Test Hole #: 1 Client: PARSON BRINCKERHOFF Date: 12-9-12
One-Call Permit #: 126 312 50 SUE Analyst: L. ABERNETHY Truck #: S-110
City / County/State: BALTIMORE, MD Road: UNION AVE.
General Location: SEE SKETCH

Actual Size, Color, Material, Type of Utility: CONCRETE DUCT BANK / TOP OF CONC. PAINTED RED
Utility Owner: BG+E Designation Color: RED
Observed Utility Condition: Good ✓ Poor ___ Other: ___
Test Hole marked by: PK Nail ✓ Hub ___ Other: ___
Portion of Utility Exposed: Top ✓ Half ___ Side ___ Full ___
1. Reference Mark Elevation: 98.34
2. Utility Top Elevation: 96.29
3. Utility Bottom Elevation (if applicable): –
4. Width (if applicable): –
5. Utility Top Depth from Reference: 2.05'
6. Utility Bottom Depth from Reference (if applicable): –

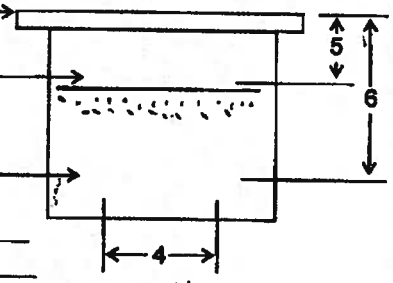

Surface Covering Type: Asphalt ✓ Concrete ___ Soil ___ Surface Covering Depth: 15"
Generalized Soil Profile: Select Fill ___ Rock ✓ Sand ___ Clay ___ Other: ___
1.) Bench Mark Elev.: 100.00 (A) Description: TOP OF BOLT ON CATENARY POLE
2.) Bench Mark Elev.: – Description: –
Excavated Location Station: – Offset –

REMARKS: PHOTO:

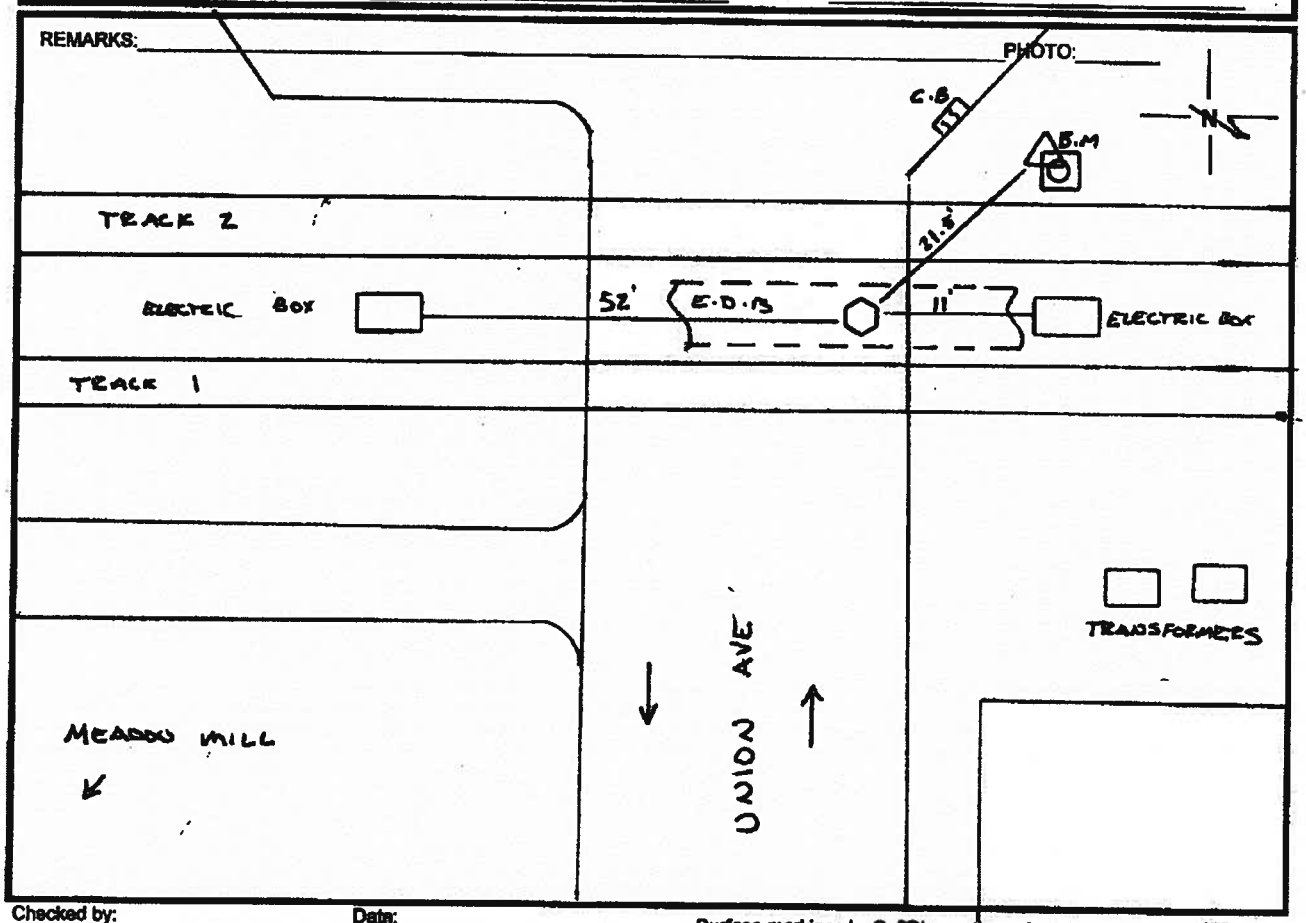

Checked by: ___ Date: ___

Surface markings by SoftDig or others do not necessarily indicate the true location or depth.

1/09

Corporate Headquarters
24 Hagerty Blvd., Suite 11
West Chester, PA 19382

SoftDig
Subsurface Utility Engineers

Phone No.: (877) SOFTDIG (763-8344)
Fax No.: (610) 696-7884

Vacuum excavation Data Sheet
[X] ENGLISH UNITS [ ] METRIC UNITS

SoftDig® Project #: 120622 Test Hole #: 2 Client: PARSON BRINKERHOFF Date: 12-9-12
One-Call Permit #: 126 512 50 SUE Analyst: L. ABERNETHY Truck #: S-110
City / County/State: BALTIMORE, MD Road: UNION AVE
General Location: SEE SKETCH

Actual Size, Color, Material, Type of Utility: CONCRETE DUCT BANK
Utility Owner: BGE Designation Color: RED
Observed Utility Condition: Good ✓ Poor ___ Other: ___
Test Hole marked by: PK Nail ___ Hub ___ Other: R/R TIE
Portion of Utility Exposed: Top ✓ Half ___ Side ✓ Full ___
1. Reference Mark Elevation: 97.75
2. Utility Top Elevation: 95.37
3. Utility Bottom Elevation (if applicable): 92.91
4. Width (if applicable): 2'
5. Utility Top Depth from Reference: 2.38'
6. Utility Bottom Depth from Reference (if applicable): 4.84'

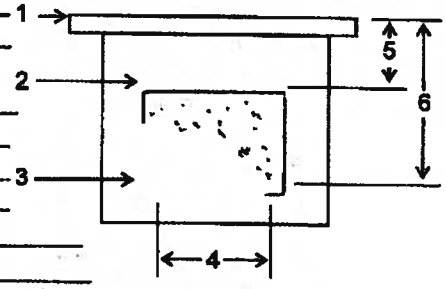

Surface Covering Type: Asphalt ___ Concrete ___ Soil ___ Surface Covering Depth: STONE
Generalized Soil Profile: Select Fill ___ Rock ✓ Sand ___ Clay ✓ Other: ___
1.) Bench Mark Elev.: 100.00 (A) Description: TOP BOLT ON CATENARY POLE
2.) Bench Mark Elev.: – Description: –
Excavated Location Station: – Offset –

REMARKS: PHOTO:

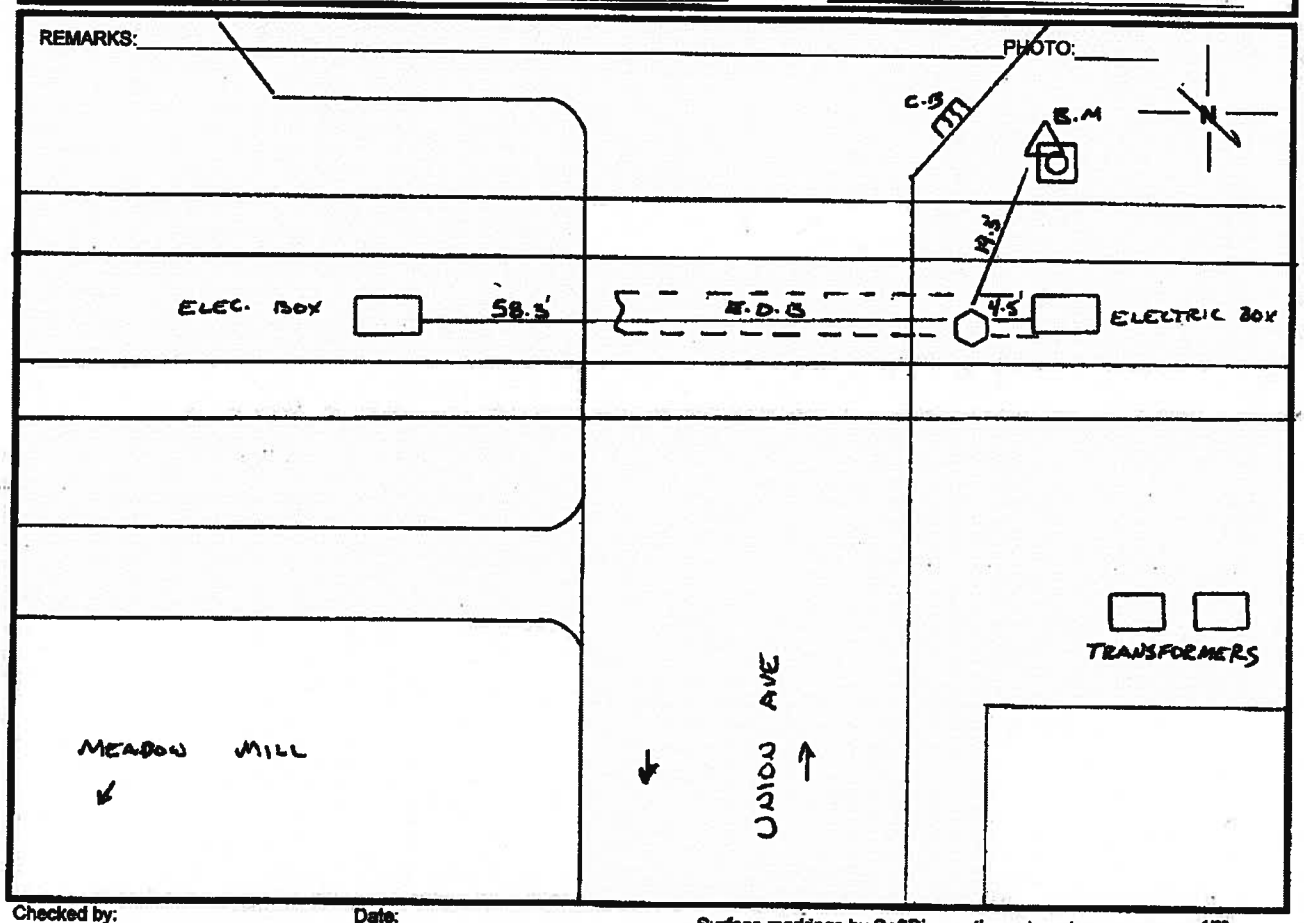

Checked by: ___ Date: ___

Surface markings by SoftDig or others do not necessarily indicate the true location or depth.

1/09

Corporate Headquarters
24 Hagerty Blvd., Suite 11
West Chester, PA 19382

SoftDig
Subsurface Utility Engineers

Phone No.: (877) SOFTDIG (763-8344)
Fax No.: (610) 696-7864

Vacuum excavation Data Sheet
☒ ENGLISH UNITS ☐ METRIC UNITS

SoftDig® Project #: 120622 Test Hole #: 1 Client: PARSON BRINCKERHOFF Date: 12-9-12
One-Call Permit #: 126 312 50 SUE Analyst: L. ABERNETHY Truck #: S-110
City / County/State: BALTIMORE, MD Road: UNION AVE.
General Location: SEE SKETCH

Actual Size, Color, Material, Type of Utility: CONCRETE DUCT BANK / TOP OF CONC. PAINTED RED
Utility Owner: BGE Designation Color: RED
Observed Utility Condition: Good ✓ Poor ___ Other: ___
Test Hole marked by: PK Nail ✓ Hub ___ Other: ___
Portion of Utility Exposed: Top ✓ Half ___ Side ___ Full ___
1. Reference Mark Elevation: 98.34
2. Utility Top Elevation: 96.29
3. Utility Bottom Elevation (if applicable): –
4. Width (if applicable): –
5. Utility Top Depth from Reference: 2.05'
6. Utility Bottom Depth from Reference (if applicable): –

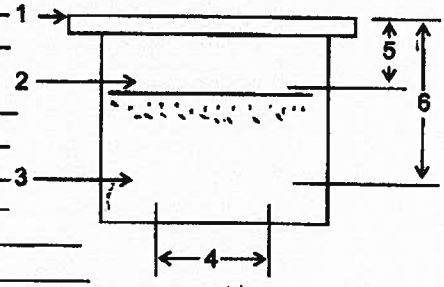

Surface Covering Type: Asphalt ✓ Concrete ___ Soil ___ Surface Covering Depth: 15"
Generalized Soil Profile: Select Fill ___ Rock ✓ Sand ___ Clay ___ Other: ___
1.) Bench Mark Elev.: 100.00 (A) Description: TOP OF BOLT ON CATENARY POLE
2.) Bench Mark Elev.: – Description: –
Excavated Location Station: – Offset –

REMARKS: PHOTO:

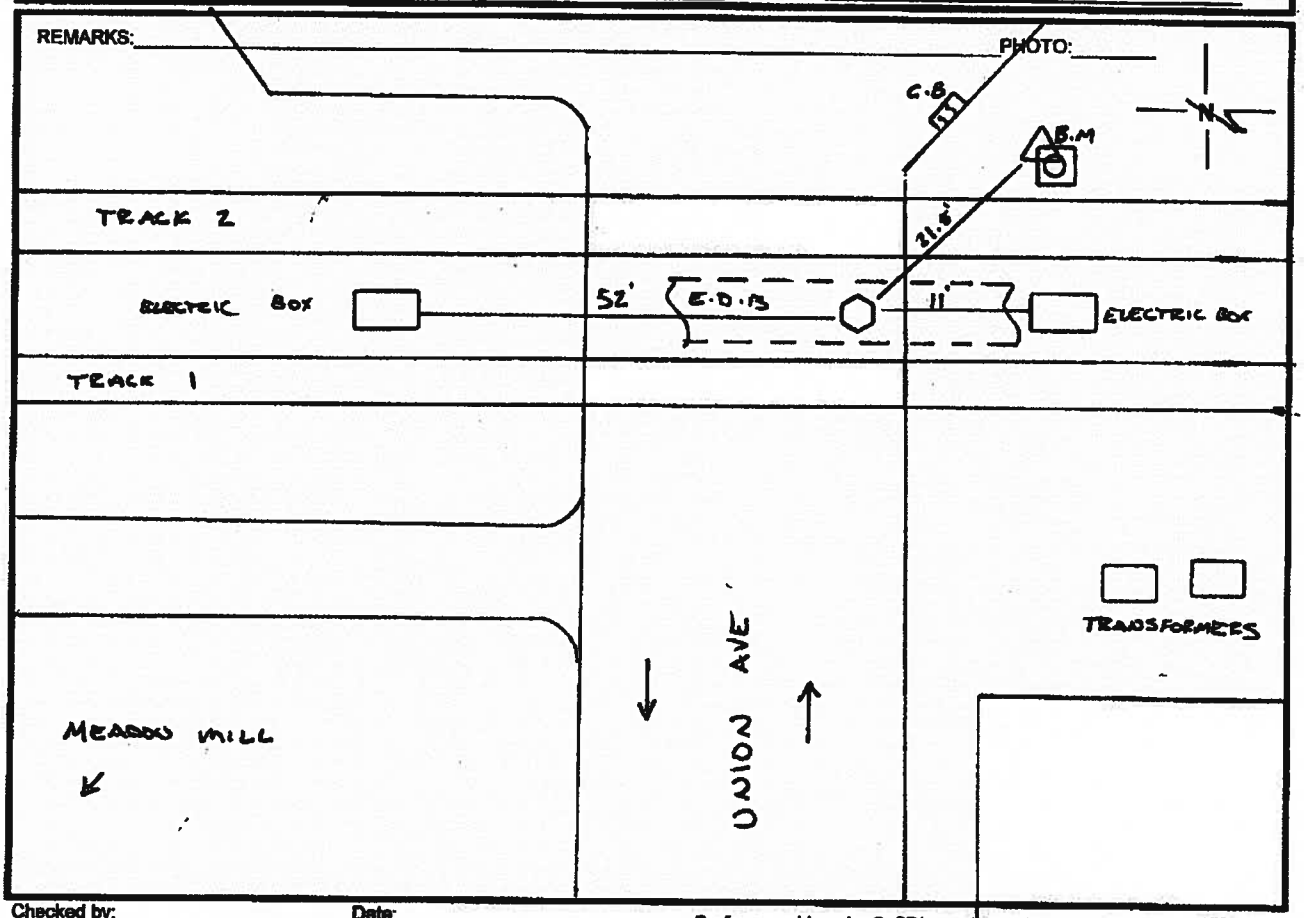

Checked by: ___ Date: ___

Surface markings by SoftDig or others do not necessarily indicate the true location or depth.

1/09

Corporate Headquarters
24 Hagerty Blvd., Suite 11
West Chester, PA 19382

SoftDig
Subsurface Utility Engineers

Phone No.: (877) SOFTDIG (763-8344)
Fax No.: (610) 696-7884

Vacuum excavation Data Sheet
[X] ENGLISH UNITS [ ] METRIC UNITS

SoftDig® Project #: 120622 Test Hole #: 2 Client: PARSON BRINKERHOFF Date: 12-9-12
One-Call Permit #: 126 512 50 SUE Analyst: L. ABERNETHY Truck #: S-110
City / County/State: BALTIMORE, MD Road: UNION AVE
General Location: SEE SKETCH

Actual Size, Color, Material, Type of Utility: CONCRETE DUCT BANK
Utility Owner: BGE Designation Color: RED
Observed Utility Condition: Good ✓ Poor ___ Other: ___
Test Hole marked by: PK Nail ___ Hub ___ Other: R/R TIE
Portion of Utility Exposed: Top ✓ Half ___ Side ✓ Full ___
1. Reference Mark Elevation: 97.75
2. Utility Top Elevation: 95.37
3. Utility Bottom Elevation (if applicable): 92.91
4. Width (if applicable): 2'
5. Utility Top Depth from Reference: 2.38'
6. Utility Bottom Depth from Reference (if applicable): 4.84'

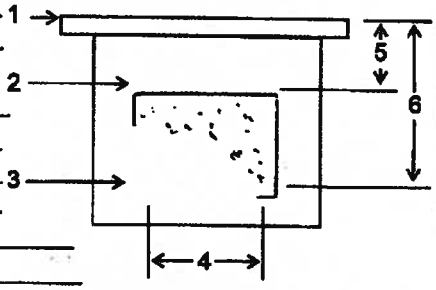

Surface Covering Type: Asphalt ___ Concrete ___ Soil ___ Surface Covering Depth: STONE
Generalized Soil Profile: Select Fill ___ Rock ___ Sand ✓ Clay ✓ Other: ___
1.) Bench Mark Elev.: 100.00 (A) Description: TOP BOLT ON CATENARY POLE
2.) Bench Mark Elev.: – Description: –
Excavated Location Station: – Offset –

REMARKS: PHOTO:

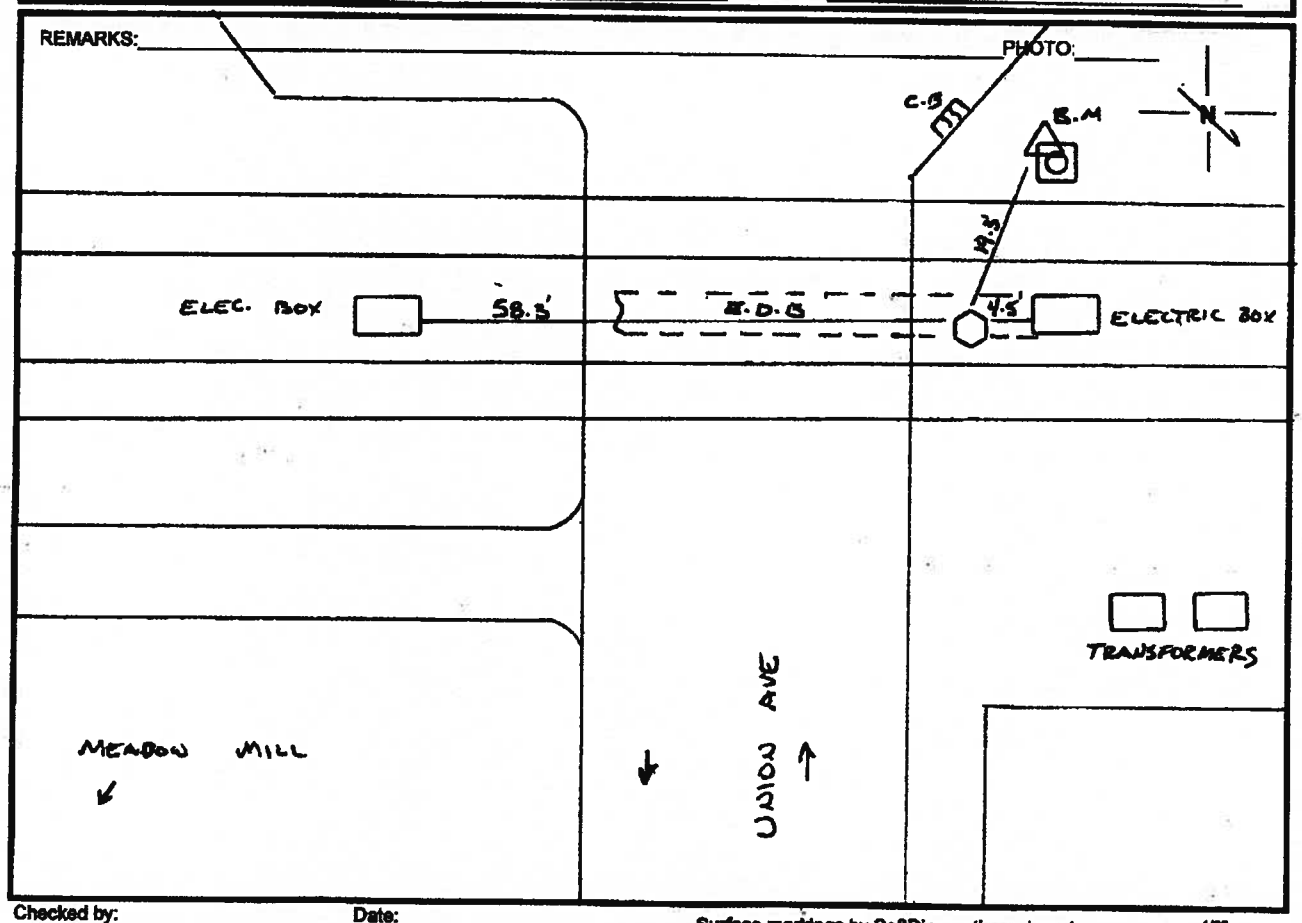

Checked by: ___ Date: ___

Surface markings by SoftDig or others do not necessarily indicate the true location or depth.

1/09

Corporate Headquarters
24 Hagerty Blvd., Suite 11
West Chester, PA 19382

SoftDig
Subsurface Utility Engineers

Phone No.: (877) SOFTDIG (763-8344)
Fax No.: (610) 696-7864

Vacuum excavation Data Sheet
☑ ENGLISH UNITS ☐ METRIC UNITS

SoftDig® Project #: 120621 Test Hole #: 1 Client: Parsons Brinckerhoff Date: 5/30/12
One-Call Permit #: 122-27488 SUE Analyst: Richard Johnson Truck #: S-96
City / County/State: Baltimore, Md. Road: UNION AVE
General Location: See Sketch

Actual Size, Color, Material, Type of Utility: 12" Black Metal Water Pipe
Utility Owner: DPW Designation Color: Blue
Observed Utility Condition: Good ___ Poor ___ Other: CORRODED
Test Hole marked by: PK Nail ✓ Hub ___ Other: ___
Portion of Utility Exposed: Top ✓ Half ___ Side ___ Full ___
1. Reference Mark Elevation: 98.09'
2. Utility Top Elevation: 94.27'
3. Utility Bottom Elevation (if applicable): —
4. Width (if applicable): 12"
5. Utility Top Depth from Reference: 3.82'
6. Utility Bottom Depth from Reference (if applicable): —

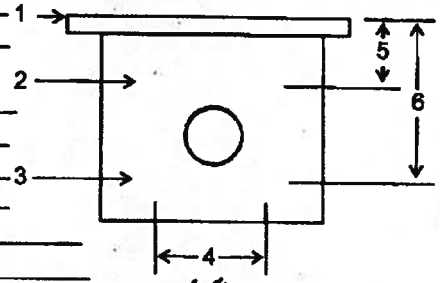

Surface Covering Type: Asphalt ✓ Concrete ___ Soil ___ Surface Covering Depth: 6" Cover
Generalized Soil Profile: Select Fill ___ Rock ___ Sand ✓ Clay ___ Other: ___
1.) Bench Mark Elev.: 100.00' ASSU. Description: Hydrant, Orange (Top)
2.) Bench Mark Elev.: ___ Description: ___
Excavated Location Station: ___ Offset ___

REMARKS: ___ PHOTO: ___

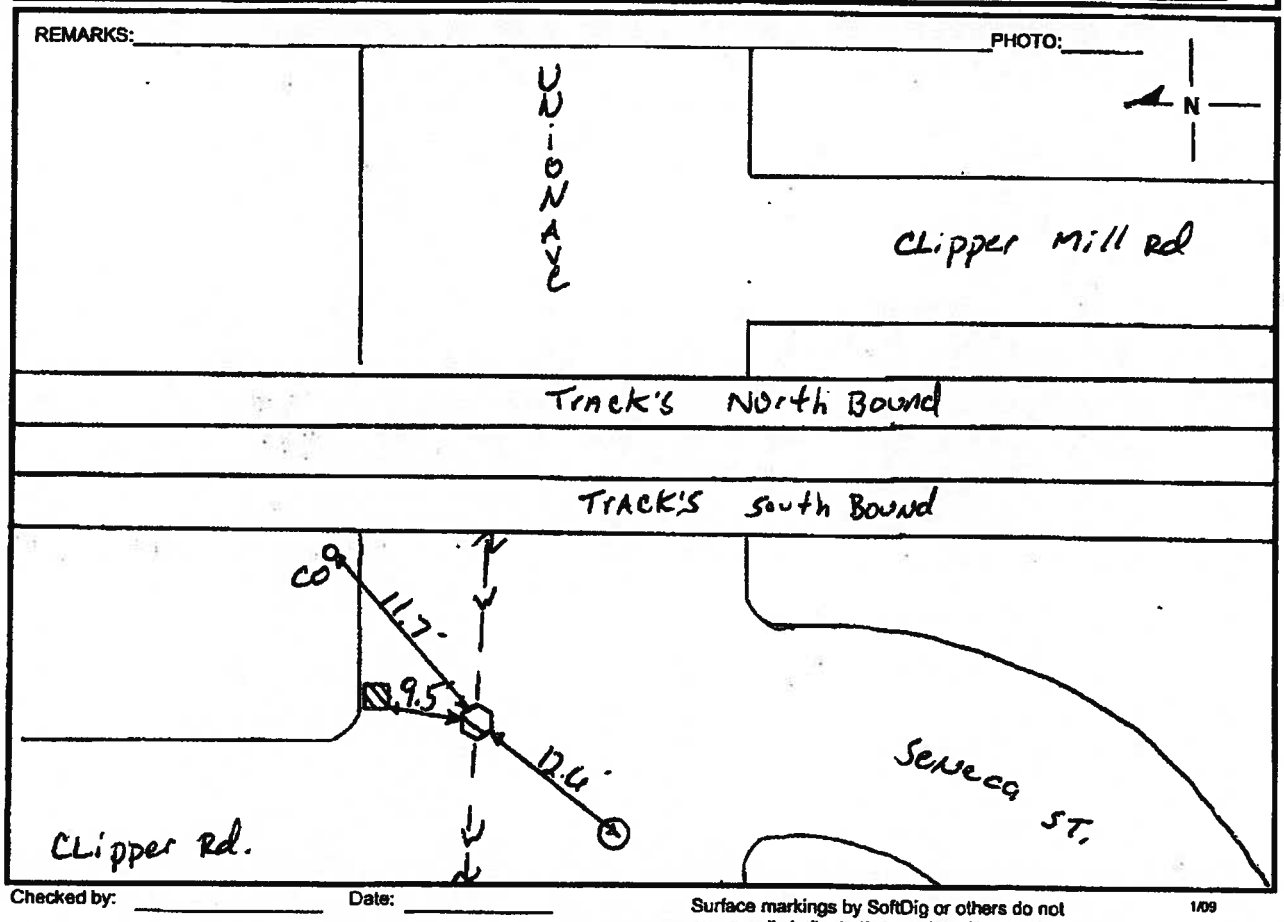

Checked by: ___ Date: ___

Surface markings by SoftDig or others do not necessarily indicate the true location or depth.

1/09

Corporate Headquarters
24 Hagerty Blvd., Suite 11
West Chester, PA 19382

SoftDig
Subsurface Utility Engineers

Phone No.: (877) SOFTDIG
(763-8344)
Fax No.: (610) 696-7864

Vacuum excavation Data Sheet
☑ ENGLISH UNITS ☐ METRIC UNITS

SoftDig® Project #: 120621 Test Hole #: 2 Client: Parsons Brinckerhoff Date: 5/30/12
One-Call Permit #: 122-27488 SUE Analyst: Richard Johnson Truck #: S-96
City / County/State: Baltimore, Md. Road: Union Ave
General Location: See Sketch

Actual Size, Color, Material, Type of Utility: 12" Black Metal Water Pipe
Utility Owner: DPW Designation Color: Blue
Observed Utility Condition: Good ✓ Poor ___ Other: ___
Test Hole marked by: PK Nail ✓ Hub ___ Other: ___
Portion of Utility Exposed: Top ✓ Half ___ Side ___ Full ___

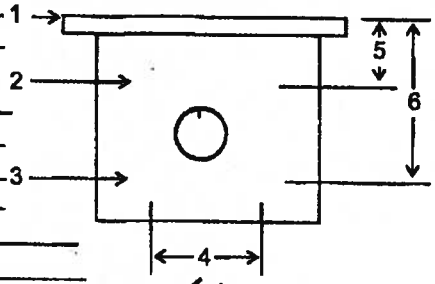

1. Reference Mark Elevation: 96.91'
2. Utility Top Elevation: 92.82'
3. Utility Bottom Elevation (if applicable): —
4. Width (if applicable): 12"
5. Utility Top Depth from Reference: 4.09'
6. Utility Bottom Depth from Reference (if applicable): —

Surface Covering Type: Asphalt ✓ Concrete ___ Soil ___ Surface Covering Depth: 6" cover
Generalized Soil Profile: Select Fill ✓ Rock ✓ Sand ___ Clay ___ Other: ___
1.) Bench Mark Elev.: 100.00' ASSU. Description: Hydrant (Orange) (Top).
2.) Bench Mark Elev.: ___ Description: ___
Excavated Location Station: ___ Offset ___

REMARKS: Had to Move it Back 40' off tracks (under duct Bank) PHOTO: ___
W UNDER ELECTRIC UNTIL 40' OFF TRACK

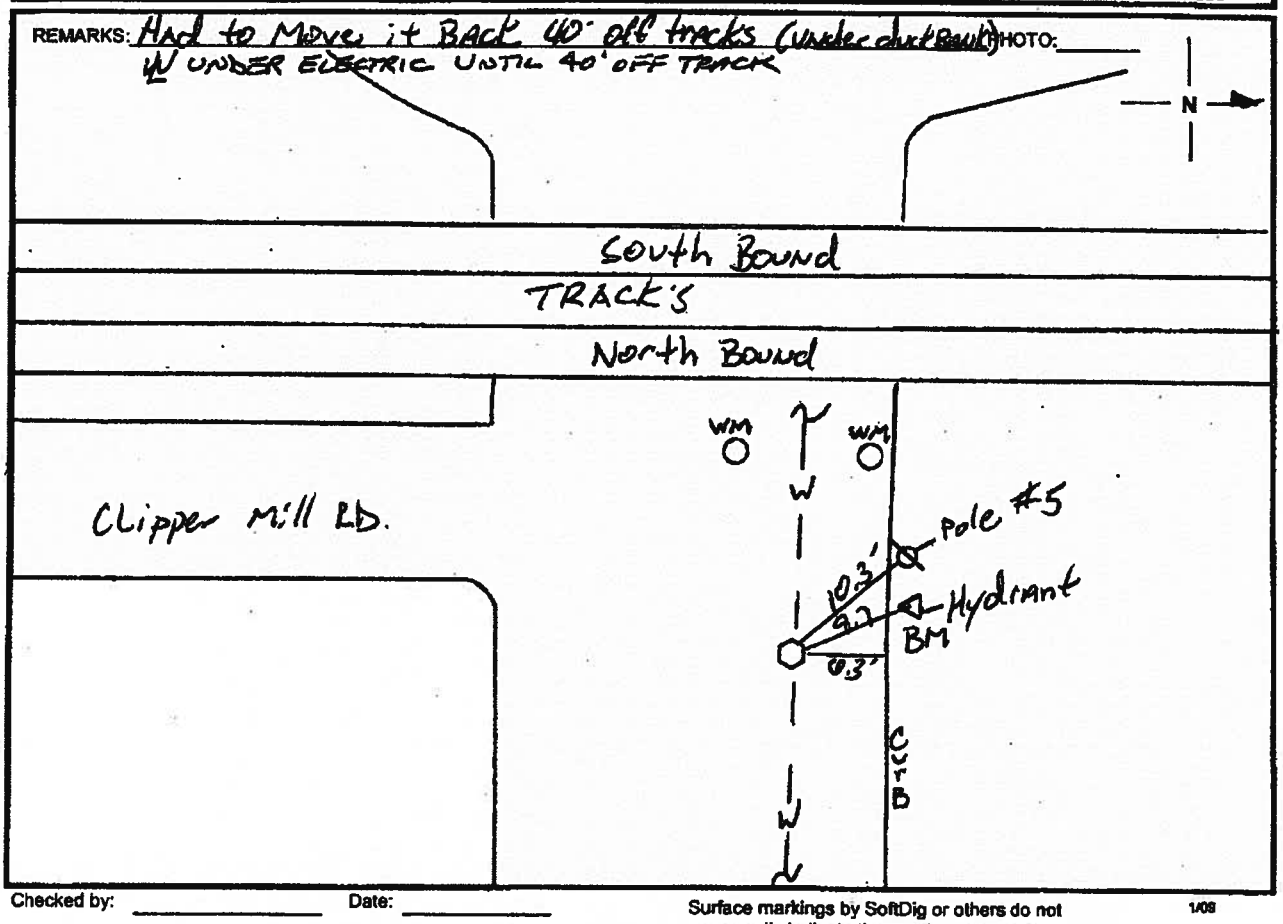

Checked by: ___ Date: ___

Surface markings by SoftDig or others do not necessarily indicate the true location or depth.

1/09

ADDENDUM NO.2

Corporate Headquarters
24 Hagerty Blvd., Suite 11
West Chester, PA 19382

SoftDig
Subsurface Utility Engineers

Phone No.: (877) SOFTDIG (763-8344)
Fax No.: (610) 696-7884

Vacuum excavation Data Sheet
☑ ENGLISH UNITS ☐ METRIC UNITS

SoftDig® Project #: 120621 Test Hole #: 2-A Client: Parsons Brinckerhoff Date: 5/30/12
One-Call Permit #: 122 2748B SUE Analyst: Richard Johnson Truck #: 5-96
City / County/State: Baltimore, Md. Road: Union Ave
General Location: See Sketch

Actual Size, Color, Material, Type of Utility: Concrete Duct Bank Electric
Utility Owner: BGE Designation Color: Red
Observed Utility Condition: Good ✓ Poor ___ Other: corroded
Test Hole marked by: PK Nail ___ ✓ Hub ___ Other: ___
Portion of Utility Exposed: Top ✓ Half ___ Side ___ Full ___
1. Reference Mark Elevation: 96.99'
2. Utility Top Elevation: 95.43'
3. Utility Bottom Elevation (if applicable): —
4. Width (if applicable): unknown
5. Utility Top Depth from Reference: 1.56'
6. Utility Bottom Depth from Reference (if applicable): —

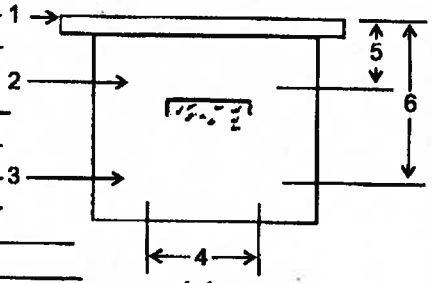

Surface Covering Type: Asphalt ✓ Concrete ___ Soil ___ Surface Covering Depth: 6" cover
Generalized Soil Profile: Select Fill ✓ Rock ✓ Sand ___ Clay ___ Other: ___
1.) Bench Mark Elev.: 100.00' ASSU. Description: Hydrant (orange) (TOP)
2.) Bench Mark Elev.: ___ Description: ___
Excavated Location Station: ___ Offset ___

REMARKS: ___ PHOTO: ___

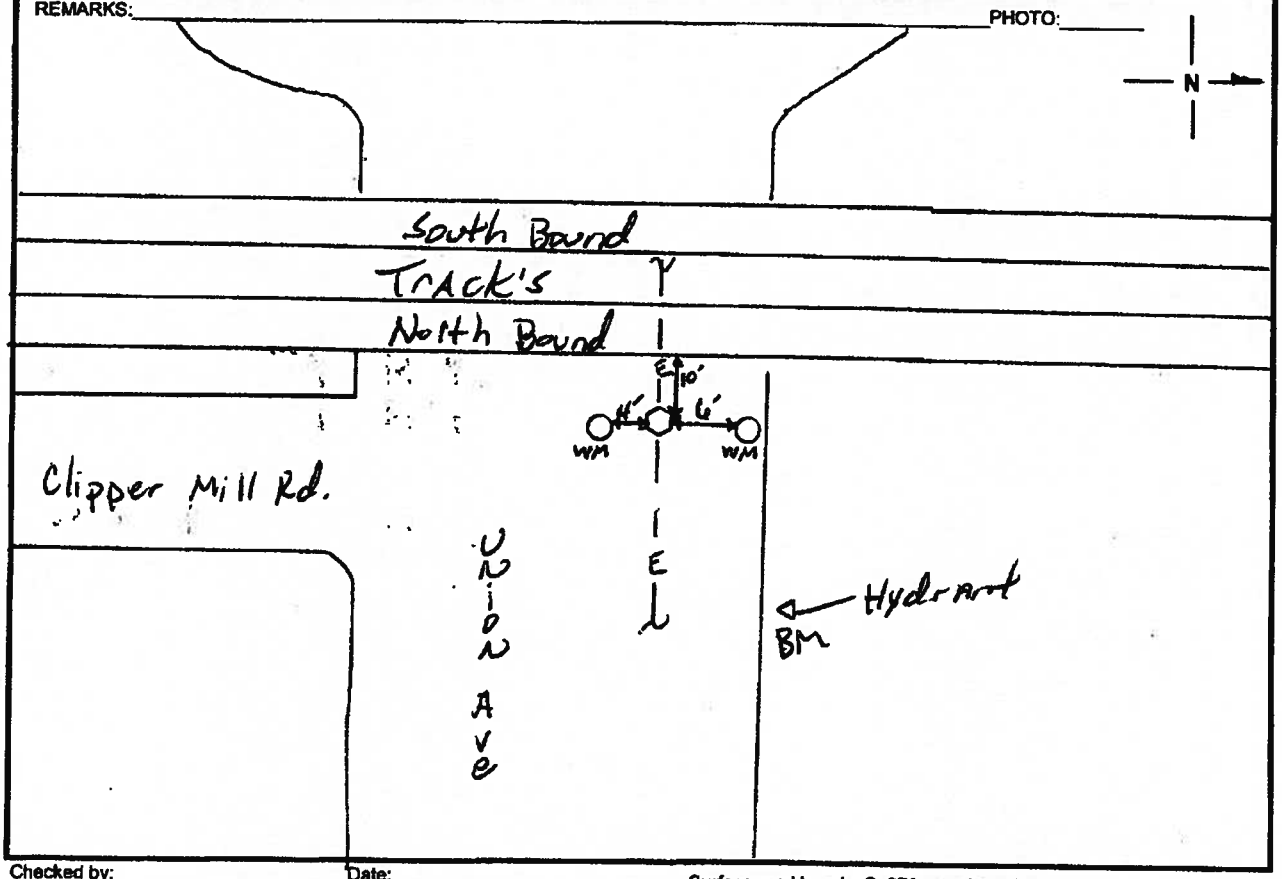

Checked by: ___ Date: ___

Surface markings by SoftDig or others do not necessarily indicate the true location or depth.

1/09

Corporate Headquarters
24 Hagerty Blvd., Suite 11
West Chester, PA 19382

SoftDig
Subsurface Utility Engineers

Phone No.: (877) SOFTDIG (763-8344)
Fax No.: (610) 696-7864

Vacuum excavation Data Sheet
☒ ENGLISH UNITS ☐ METRIC UNITS

SoftDig® Project #: 120620 Test Hole #: 1 Client: PARSONS BRW CORPORATION Date: 4-29-12
One-Call Permit #: SUE Analyst: L. ABERNETHY Truck #: S-110
City / County/State: BALTIMORE / MD. Road: UNION AVE.
General Location: SEE SKETCH

Actual Size, Color, Material, Type of Utility: CONC. DUCT BANK
Utility Owner: CITY Designation Color: RED
Observed Utility Condition: Good ✓ Poor ___ Other: ___
Test Hole marked by: PK Nail ___ Hub ___ Other: PAINT ON R.R. TIE
Portion of Utility Exposed: Top ___ Half ___ Side ___ Full ✓
1. Reference Mark Elevation: 97.41
2. Utility Top Elevation: 96.92
3. Utility Bottom Elevation (if applicable): 94.35
4. Width (if applicable): 3.6'
5. Utility Top Depth from Reference: 0.49'
6. Utility Bottom Depth from Reference (if applicable): 3.06'

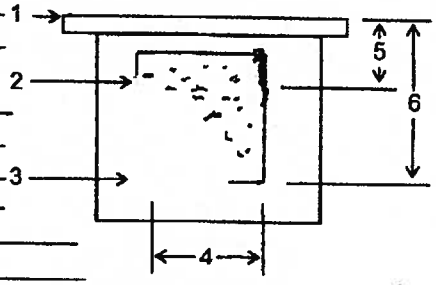

Surface Covering Type: Asphalt ___ Concrete ___ Soil ___ Surface Covering Depth: STONE
Generalized Soil Profile: Select Fill ___ Rock ___ Sand ___ Clay - Other: ___
1.) Bench Mark Elev.: 100.00 (A) Description: BOLT ON L. POLE BASE
2.) Bench Mark Elev.: – Description: –
Excavated Location Station: – Offset –

REMARKS: PHOTO:

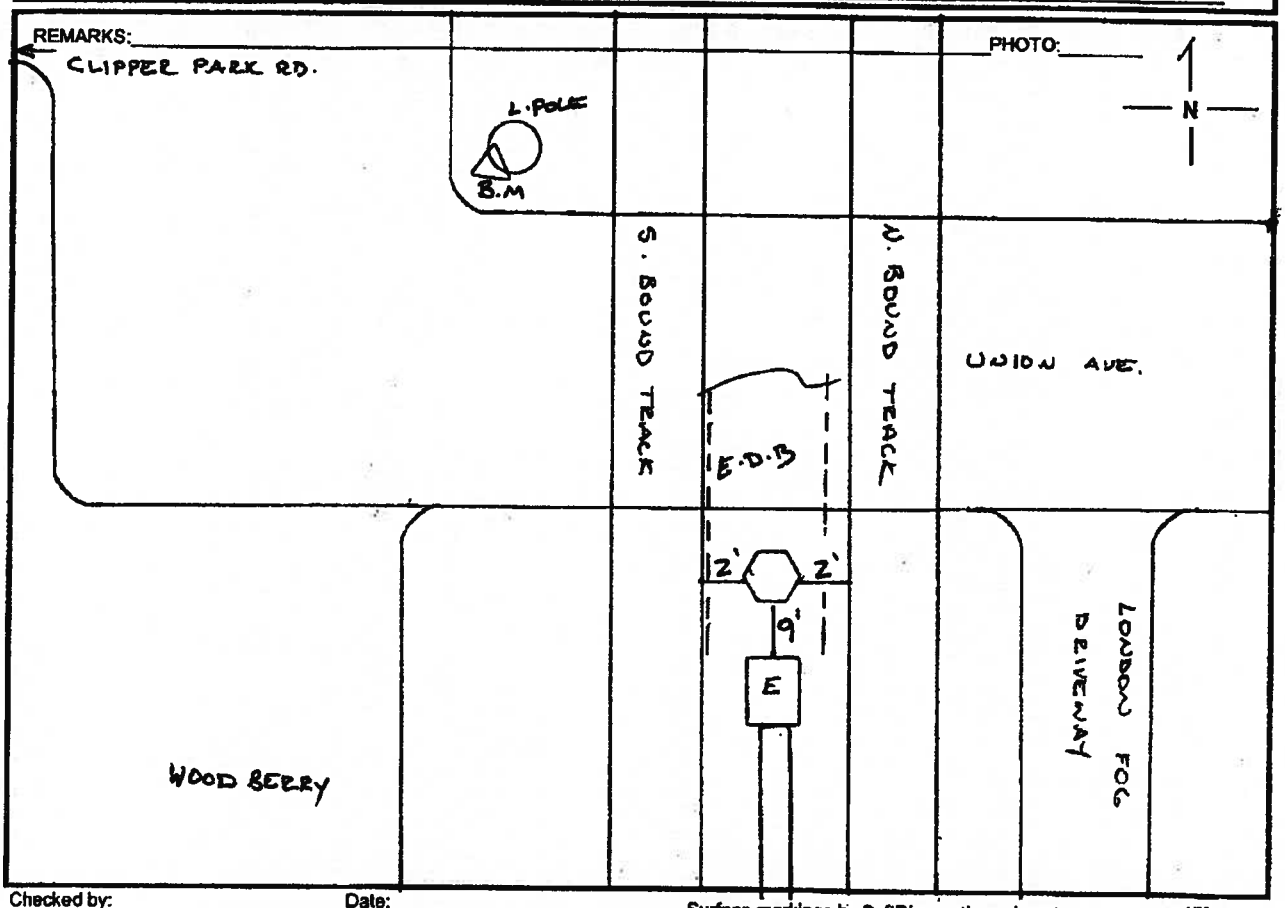

Checked by: ___ Date: ___

Surface markings by SoftDig or others do not necessarily indicate the true location or depth.

1/09